Leybold

TRIVAC® B
D 16 B / D 25 B

Rotary Vane Vacuum Pump
ATEX Categories 3 i and 3 i/o
■ with mineral oil

Operating Instructions GA01217_002_C3

Part Nos.

112 65 /66 /75 /76	3i
112 66J /76J	3i
113 25 /35	3i
113 28 /38	
113 33 /33J	
140 160 /V /170	3i/o
140 165	
898 199 /199-1 /208 /698	
898 229	
912 65-1 /65-2	
912 75-2	
914 63-1	



Contents

		Page
0	**Important Safety Information**	**5**
0.1	Mechanical hazards	5
0.2	Electrical hazards	5
0.3	Thermal hazards	6
0.4	Hazards caused by materials and substances	6
0.5	Danger of ignition	7
0.6	Hazard caused by noise	7
0.7	Risk of damaging the pump	8
TRIVAC B ATEX Categories 3 i and 3 i/o Vacuum Pump		**9**
Classification and Marking of the Pump		9
Explanation of the Symbols		10
Protective Measures		11
1	**Description**	**13**
1.1	Function	15
1.2	Lubricants	17
1.3	Supplied Equipment	18
1.4	Technical Data	19
1.5	Accessories	28
2	**Transport and Storage**	**29**
3	**Installation**	**30**
3.1	Placement	30
3.2	Conforming Utilization	31
3.2.1	Non-conforming Utilization	32
3.3	Connection to the System	34
3.4	Electrical Connections	36
3.4.1	Pump with Single-Phase AC Motor	36
3.4.2	Pump with Three-Phase AC Motor	37
3.5	Connecting the ATEX-Motor	39
3.5.1	General Installation Information	40
3.5.2	Fitting the Coupling	41
3.5.3	Fitting the Motor	42
3.5.4	Electrical Connection	42

Contents

4	**Operation**	**43**
4.1	Media Compatibility	43
4.2	Start-up	43
4.3	Operation	44
4.3.1	Pumping of Non-Condensable Gases and Vapours	44
4.3.2	Pumping of Condensable Gases and Vapours	44
4.3.3	Operating Temperature	45
4.4	Shutdown	45
4.4.1	Controller/Mains Power Failure	46
5	**Maintenance**	**47**
5.1	Maintenance Plan	48
5.2	Leybold Service	49
5.3	Monitoring the Oil Level	50
5.3.1	Checking the Condition of the Oil	50
5.4	Oil Change	51
5.5	Cleaning the Inlet Screen	53
5.6	Removing and Fitting the Internal Demister	53
5.7	Disassembly and Reassembly of the Electric Motor	55
5.7.1	Checking the Coupling	56
5.8	Replacing the Shaft Seal	56
5.9	Removing and Remounting the Pump Module	59
5.9.1	Removing the Pump Module	59
5.9.2	Remounting the Pump Module	60
6	**Troubleshooting**	**61**
7	**Wearing Parts and Original Spare Parts**	**63**
8	**Waste Disposal**	**63**
	EU Declaration of Conformity	**64**
	EU Incorporation Declaration	**67**

Original installation and operating instructions.

Safety information

NOTICE



lObligation to Provide Information
Before installing and commissioning the TRIVAC B, carefully read these Operating Instructions and follow the information so as to ensure optimum and safe working right from the start.

The Leybold **TRIVAC B** has been designed for safe and efficient operation when used properly and in accordance with these Operating Instructions. It is the responsibility of the user to carefully read and strictly observe all safety precautions described in this section and throughout the Operating Instructions. The pump **must only be operated in the proper condition and under the conditions described in the Operating Instructions.** It must be operated and maintained by trained personnel only. Consult local, state, and national agencies regarding specific requirements and regulations. Address any further safety, operation and/or maintenance questions to our nearest office.

"Trained personnel" for the operation of this pump are

- skilled workers with knowledge in the fields of mechanics, electrical engineering and vacuum technology, and
- personnel specially trained for the operation of vacuum pumps.

DANGER



DANGER indicates an imminently hazardous situation which, if not avoided, will result in death or serious injury.

WARNING



WARNING indicates a potentially hazardous situation which, if not avoided, could result in death or serious injury.

CAUTION



CAUTION indicates a potentially hazardous situation which, if not avoided, could result in minor or moderate injury.

NOTICE



NOTICE is used to notify users of installation, operation, programming or maintenance information that is important, but not hazard related.

Figures
The references to figures, e.g. (4/2) consist of the consecutive Fig. No. and the Item No. in that order.

We reserve the right to alter the design or any data given in these Operating Instructions. The illustrations are not binding.

Retain the Operating Instructions for further use.

0 Important Safety Information

0.1 Mechanical hazards

WARNING



1 Avoid exposing any part of the human body to the vacuum.

2 Never operate the pump without a connected intake line or without fitting a blank flange.

3 Do not operate the pump with any of the covers removed.
Serious injury may result.

4 The location at which the TRIVAC B (including its accessories) is being operated should be such that angles over 10° from the vertical are avoided. Select the operating place so that all controls are easily accessible.

5 The pump when filled with oil must only be moved in its vertical position. Spilled oil involves the risk of falling.

6 Make sure that the gas flow from the exhaust port is not blocked or restricted in any way.

7 If exhaust gases must be collected or contained, do not allow the exhaust line to become pressurised. The pressure in the oil box must not exceed 0.5 bar (g). An exhaust line which is too small in diameter or which is blocked can result in the formation of overpressures within the pump. Possible consequences can be a damaged or even burst open pump. Thus the exhaust line must be checked from time to time to ensure that there are no obstructions.

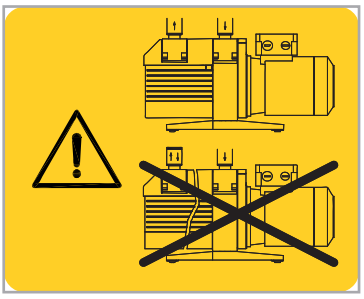

Warning label

8 When moving the TRIVAC B always use the allowed means.

0.2 Electrical hazards

WARNING



1 The electrical connection must only be provided by a trained person. Please observe the national regulations in the country of use like EN 50110-1 for Europe, for example.

2 Lethal voltages are present at the mains connections. Before starting with any maintenance and service work, de-energise (lockout/tagout) the product first.

3 Lay connecting lines so that they cannot be damaged. Protect the lines against humidity and contact with water. Avoid any heat stress on the line due to unfavourable laying conditions.

4 Suitably support the connecting lines so that the pumps are not exposed to any major mechanical stress.

5 After a mains power failure the pump will run up automatically again. This also applies in the case of an emergency shutdown. In order to prevent the pump from running up automatically again, the pump must be integrated within a control arrangement such that it can only be switched on manually again after the mains power has returned.

6 Provide an adequate ground connection for the pump so as to avoid any electrostatic charging.

Safety information

0.3 Thermal hazards

CAUTION



1 Under certain ambient conditions the TRIVAC B may attain a temperature of over 70 °C (158 °F). There then exists the danger of receiving burns.
Note the symbols on the pump pointing to the hazards, and in the case of a hot pump wear the required protective clothing. All work on the “pump still warm from operation” should only be done using protection gloves.

2 Before servicing and maintenance work always leave the pump to cool down.

3 Note the warning information on the housing surface. If these warning notices have been removed, covered or obstructed, include corresponding additional warning notices.

0.4 Hazards caused by materials and substances

DANGER



1 The vacuum line and the exhaust line must be leaktight. Hazardous process gases may escape or the pumped gases can react with air or atmospheric humidity. After installation of the pump and after servicing work on the vacuum system, a leak search will always be necessary.

When pumping hazardous gases we recommend a leak search on a regular basis. Leaks in the pump cannot be ruled out under all circumstances. When pumping hazardous gases, the operator must ensure that that leaks at the pump will not be a hazard.

2 Since not all application related hazards for vacuum systems can be described in detail in these Operating Instructions, Leybold has available a separate document (Safety Booklet) in which the hazards and general safety concepts for design, operation and maintenance of vacuum systems are explained.

When planning to pump hazardous substances with this pump, read the related chapters in the Safety Booklet and in these Operating Instructions first. You can download the Safety Booklet from our homepage.

3 The pump is not suited for oxygen operation.

4 Before commissioning the TRIVAC B, make sure that the media which are to be pumped are compatible with each other so as to avoid hazardous situations. All relevant safety standards and regulations must be observed.

5 When pumping toxic, chemical, radioactive and corrosive gases as well as pyrophorous substances, the operating company is under the obligation to comply with the national and international safety regulations and guidelines. Regarding the suitability of the TRIVAC B pumps for special applications in which such gases, respectively substances shall be pumped, Leybold should be consulted first.

6 If the pump has previously handled hazardous gases, implement the proper precautionary measures before opening the intake or exhaust connection.
Before opening the pump, purge it for a longer period of time with an inert gas.

If necessary, use gloves, a respirator and/or protective clothing and work under an exhaust hood. Firmly seal off the pump.
When shipping the contaminated pump for servicing, please also state the type of hazard. For this you must use a form which we have prepared for you.

7 When cleaning a system in which a TRIVAC pump has been integrated, all parts in contact with the medium need to be compatible with the cleaning agent so as to prevent a chemical reaction. Residues of the cleaning agent within the pump must be avoided.

8 Contaminated parts can be detrimental to health and environment. Before beginning with any work, first find out whether any parts are contaminated. Adhere to the relevant regulations and take the necessary precautions when handling contaminated parts.

0.5 Danger of ignition

CAUTION



1 Only those pumps which are equipped with an Atex certified motor are suited for operation in the explosion hazard areas approved for the pumps.
Please take note of the marking on the type plates and any additional information on the pump.

2 The standard version of the TRIVAC B is not suited for operation in explosion hazard areas.

3 The TRIVAC pumps including the accessories are fundamentally not suited for pumping of combustible and explosive gases or vapours. The pump including accessories is only suited within the scope of the ATEX guideline for pumping of explosive gases and vapours. Mixtures of substances may, regarding the fire and explosion risk be critical or uncritical. The operating company is under the commitment to analyse this and rate the hazard potential accordingly so as to therefrom derive the necessary safety measures which must be introduced.

4 Provided ignitable or pyrophorous substances are present in the equipment you must:
- ensure that no air can enter into the equipment,
- ensure that the system is leak-tight,
- with an inert gas purge (with dry nitrogen, for example) dilute all ignitable gases or vapours which may enter into the pump through the pump's inlet and/or with an inert gas purge reduce the concentration of ignitable gases or vapours in the pump and in the exhaust line to less than a quarter of the lower explosion limit (LEL) published for the respective gases.

0.6 Hazard caused by noise

The noise level produced by the pump less than 60 dB(A). Suitable hearing protection measures must be introduced.

CAUTION



Safety information

NOTICE



0.7 Risk of damaging the pump

1 Before starting up for the first time, the motor circuit must be equipped with a suitable protective motor switch. Please take note of the information in these Operating Instructions and on the electric motor (wiring diagram).

2 Do not allow the ingestion of small objects (screws, nuts, washers, pieces of wire, etc.) through the inlet port. For this reason always use the inlet screen which is supplied as standard.

3 Do not use the pump for applications that produce abrasive or adhesive powders or condensable vapours that can leave adhesive or high viscosity deposits. When planning to pump vapours other than water vapour please contact our sales or service department for advice.

4 This pump is suited for pumping water vapour within the specified water vapour tolerance limits.

5 Avoid vapours that can condense into liquids when being compressed inside the pump, if these substances exceed the vapour tolerance of the pump.

6 Before pumping vapours the TRIVAC B should have attained its operating temperature. This will be the case approximately 30 minutes after having started the pump. During this warming up phase, the pump should be separated from the process, by a blocking valve in the intake line, for example.

7 In the case of wet processes we recommend the installation of liquid separators upstream and downstream of the pump as well as the use of the gas ballast.

8 The exhaust line should be laid so that it slopes down and away from the pump so as to prevent condensate from backstreaming into the pump.

9 The entry of particles and fluids must be avoided under all circumstances.

10 Reactive or aggressive substances in the pump chamber may impair the operating oil or modify it. In addition, such substances may be incompatible with the materials of the pump (Viton, grey cast iron, aluminium, steel, resins, glass etc.).

11 Corrosion, deposits and cracking of oil within the pump are not allowed.

12 Normal amounts of humidity within the range of the pump's water vapour tolerance will not significantly affect pump performance when the gas ballast is active.

13 When operating the pumps at gas throughput, it is urgently recommended to connect an exhaust filter or use a suitable exhaust line. Here, the exhaust line must slope down and away from the pump.

14 In the case of custom pumps please note the information provided in the supplementary sheets.

TRIVAC B ATEX Categories 3 i and 3 i/o Vacuum Pump

Operating Instructions for Operation in Explosion Hazard Areas

The vacuum pumps are designed and constructed in such a way that the occurrence of foreseeable ignition sources during normal operation can be excluded. Operated in accordance with the parameters specified in the instructions for use, the pump provides a normal level of protection. It is therefore suitable for use in conditions where explosive atmospheres caused by gases, vapours or mists in the air are unlikely to occur or, if they do occur, this will be very rarely and only for a short period of time (i.e. Zone 2).

The pump is not suited for utilisation in dusty areas.

NOTICE



The pumps (part no.: 140160, 140160V and 140170) with appropriate marking on **pump and motor** may be installed and operated in explosion hazard areas.

Please observe the information on gas group, temperature class as well as restrictions on speed, temperature range and additional instructions on the pump.

The pumps (part no.: 112 65 /66 /66J /75 /76 /76J, and 11325, and 11335) have an ATEX approval only for the pump interior (= the process gas side of the pump). These pumps are **not** suitable for installation in explosion hazard areas.

Classification and Marking of the Pump

The pumps (part no.: 140160, 140160V, 140170) are marked as follows:



II 3/3G Ex h IIC T4 (50 Hz) Gc / Ex h IIC T3 (50 Hz) Gc
12 °C ≤ Ta ≤ 40 °C

The pumps (part no.: 112 65 /66 /66J /75 /76 /76J, 11325, 11335) are marked as follows:



II 3/-G Ex h IIC T4 (50 Hz) Gc
II 3/-G Ex h IIC T3 (60 Hz) Gc
12 °C ≤ Ta ≤ 40 °C

ATEX

Explanation of the Symbols

	ATEX logo
„ .. / .. ”	means that the product has two different categories
„ - ”	means that part of the product does not comply with the standard and is not intended for use in an explosion hazard area.
II 3/-G (Gc)	the pump can extract gases from zone 2, but must be installed outside explosion hazard areas.
(i)/(o)	specifies the category/conditions under which the inside (i) (i.e. parts of the equipment in contact with the process gas flow) and the outside (o) of the equipment are classified, where these differ.
G	for areas with potentially explosive atmospheres caused by gases, vapours or mists in the air.
h	this code letter applies to all non-electrical devices, regardless of which type of protection is used; see DIN EN ISO 80079-37: Non-electrical equipment for explosive atmospheres - Non-electrical type of protection constructional safety „c“, control of ignition sources „b“, liquid immersion „k“
IIC	Explosion Groups
T4, T3	Temperature class Example: Pumps with temperature class T3 may only be used to pump gases with an ignition temperature of more than 200 °C. Temperature class max. surface temperature (°C) T1 450 °C T2 300 °C T3 200 °C T4 135 °C T5 100 °C T6 85 °C
50 Hz, 60 Hz	for temperature class T4 the maximum permissible frequency is 50 Hz, for temperature class T3 the maximum permissible frequency is 60 Hz.
Gc	the marking has now been supplemented by the level of protection of the equipment. This Equipment Protection Level (EPL) consists of two letters. The first letter indicates the type of explosive atmosphere: G for gas, D for dust. The actual protection level is defined by the letters a, b or c.
Ta	Permissible ambient temperature for operating the pump: +12 °C ≤Ta≤ +40 °C.

Overview of equipment groups, categories, zones, and equipment protection levels (EPL)

EN ISO 80079-36		Directive 2014/34/EU		EN IEC 60079-10-X
EPL	**Group**	**Equipment group**	**Equipment category**	**Zones**
Ma	I	I	M1	not applicable
Mb			M2	
Ga	II	II	1G	0
Gb			2G	1
Gc			3G	2
Da	III		1D	20
Db			2D	21
Dc			3D	22

Protective Measures

Protection by housing

Symbol	Zone	Adequate safety
ta	20	for rarely occuring errors
tb	21	for predictable errors
tc	22	for normal operation

Classifications of dusts

IIIA	combustible flyings
IIIB	non-conductive dust
IIIC	conductive dust

Hot Surfaces

During normal operation of the vacuum pump, compression of the gases causes the surfaces to heat up resulting in hot surfaces. Tests have shown in the case of conforming operation of the pump (in accordance with these instructions) that at the inside of the pump which might come into contact with a potentially explosive atmosphere attains during operation with a 50 Hz motor a maximum temperature of less than 135 °C and during operation with a 60 Hz motor a maximum temperature of less than 200 °C.

CAUTION



The maximum temperatures are attained during continuous operation at an inlet pressure ranging between 300 and 500 mbar. The actually attained temperature depends on the inlet pressure.

The outside of the pump may attain under these conditions a surface temperature of over 80 °C. The maximum temperature is in the case of operation with a 50 Hz motor less than 135 °C and in the case of operation with a 60 Hz motor less than 200 °C.

Higher maximum surface temperatures can occur when filling and operating the pump with types of oil which differ from the Leybold oil LVO 100. This is due to the frequently worse lubrication and cooling properties of such oil.

NOTICE



Hot Exhaust Gases

Due to the compression of the gases, the pump will produce in the case of normal operation hot exhaust gases. The exhaust gas temperatures do not exceed the maximum surface temperatures stated for the pump.

CAUTION



The exhaust gases need to be disposed of through a suitable exhaust gas system.

Mechanical Sparks

During normal operation no mechanically produced sparks occur since the internal surfaces of the pump are covered with oil. The external fan and the fan cover are so designed that a sufficient clearance is maintained thereby excluding the possibility of a contact.

DANGER



Sucking in of particles into the pump needs to be avoided so as to prevent the formation of hot spots due to friction.

NOTICE



Electric Sparks

DANGER



These can be caused by the electric motor and the accessories supplied with the pump. If the pump has been approved for operation in areas with an explosive atmosphere, then motor and supplied accessories have the same classification as the pump. Motor and accessories need to be installed and used in agreement with the enclosed manufacturer's information.

Static Electricity

DANGER



The pump needs to be sufficiently grounded so as to avoid any electrostatic charging. This is attained when properly connecting the electric ground conductor to the motor. During normal operation no hazardous generation of charges will occur on the elastomer coupling or the fan.
Wipe plastic parts on the pumps of category 3G outside only with a moistened piece of cloth.
Only original Leybold oil filters and gas inlet filters must be used since these have been designed such that proper connection to ground is ensured. Dust on the surfaces must only be removed using a moist piece of cloth so as to exclude the possibility of generating sparks.

Chemical Reactions

DANGER



The pump must not be used in connection with reactive or corrosive gases, which might result in an exothermal chemical reaction.

Additional Safety Measures

Overheating the pump can give rise to temperatures which exceed the maximum permitted surface temperature.

Maintain the correct oil level

In order to prevent overheating, installation and maintenance need to be done in accordance with the information provided in these Operating Instructions. Especially the correct oil level needs to be maintained.

The oil must be exchanged within the recommended interval or earlier if contaminated by the process gas.

Additional Maintenance Requirements

In those cases where dust can deposit itself on the pump or the motor surfaces, measures must be introduced which ensure that such deposits are removed on a regular basis.

In order to ensure that the defined safety level is complied with, use only original Leybold spare parts.

In addition to the maintenance work described in the Operating Instructions every 15,000 operating hours or every three years a complete refurbishment of the pump including a replacement of the bearings, the motor and the coupling element should be scheduled.

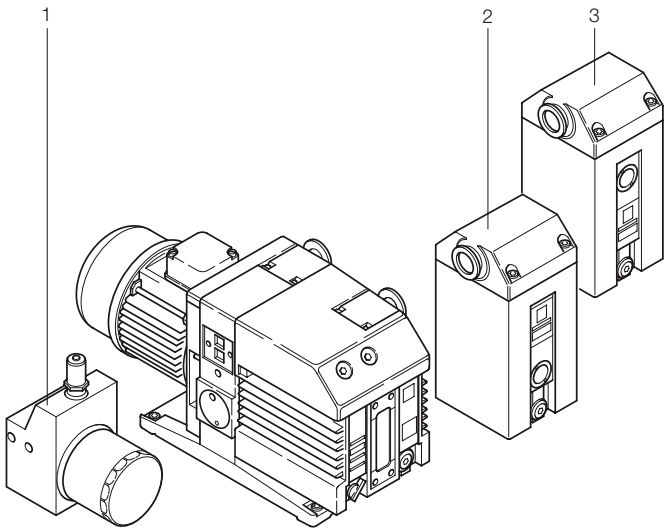

1 Oil filter OF 4-25
2 Exhaust filter AF 16-25
3 Condensate Separator AK 16-25

Fig. 1 TRIVAC B pump with accessories

1 Description

TRIVAC B pumps are oil-sealed rotary vane pumps. The TRIVAC D 16 B and D 25 B are dual-stage pumps. The number in the type designation (16 or 25) indicates the pumping speed in $m^3 \cdot h^{-1}$.

The vacuum pumps from the line TRIVAC B Category 3 have been designed and manufactured especially for the purpose of fulfilling the requirements of Equipment Group II, Category 3 of the “ATEX Directive” (2014/34/EU) for conforming utilisation of equipment and protection systems in explosion hazard areas”.

Areas of application

TRIVAC B pumps are capable of pumping gases and vapours and evacuating vessels or vacuum systems down into with the medium vacuum range. The standard versions of the pump are not suited for pumping of oxygen exceeding the concentration as found in the atmosphere, and are also not suited for pumping of hazardous gases or extremely aggressive or corrosive media.

Process gas side

The inside (the process gas side) of this vacuum pump is so designed and rated that the occurrence of foreseeable ignition sources can be excluded during normal operation. Provided the pump is operated within the limits of the parameters specified in the Operating Instructions, the pump will offer a normal degree of protection. It is therefore suited for operation under conditions under which it is unlikely that explosive atmospheres are caused by gases, vapours or mists in the air or should these occur then only rarely and for a short period of time (i.e. Zone 2). The same conditions apply to outside components of the pumps which have been certified.

Description

DANGER



If only the inside of the pump (process side) has been certified for use in explosive atmospheres, then the pump itself must not be installed and operated within explosion hazard areas.

Outside of the pump

Areas in which explosive atmospheres (gases, vapours or mists) in the air can occur are classified in three zones according to the frequency and the duration of the occurrence of an explosive atmosphere.

Zone 0, 1 and 2

These zones are designated as Zone 0, 1 and 2. The definitions for these zones are described in the Annex I of the “Atex Directives (Directive 99/92/EG) for the improvement of health protection and safety of staff which might be endangered by explosive atmospheres”.

Responsibility of the operator

Conforming utilisation of the TRIVAC pumps and compliance with the statutory requirements of the ATEX operator directive (99/92/EG) is the responsibility of the operator.

Drive concept

Via an intermediate flange the drive motor of the TRIVAC B is mounted to the coupling housing. The pump and motor shafts are directly connected by a flexible coupling. The bearing points of the pump module are force lubricated sliding bearings. All controls as well as the oil-level glass and the nameplate are arranged on the front. All connections are to be found at the sides of the pump. The oil-level glass is provided with prisms for better observation of the oil level.

The pump module consists of assembly parts which are pin-fitted so as to allow easy disassembly and reassembly. The pump module can be easily removed without special tools.

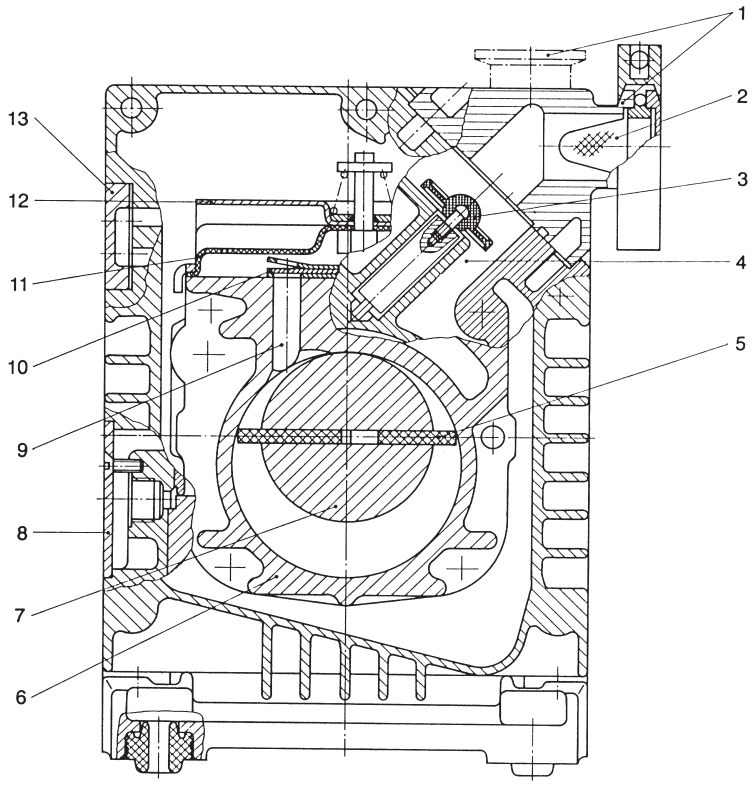

1 Intake port
2 Dirt trap
3 Anti-suckback valve
4 Intake channel
5 Vanes
6 Pump chamber
7 Rotor
8 Cover plate, connection for inert gas ballast
9 Exhaust channel
10 Exhaust valve
11 Internal demister
12 Spring buckles
13 Cover plate, connection for oil filter

Fig. 2 Sectional drawing of the TRIVAC B

1.1 Function

The rotor (2/7), mounted eccentrically in the pump housing (2/6), has two radially sliding vanes (2/5) which divide the pump chamber into several compartments. The volume of each compartment changes periodically with the rotation of the rotor.

As a result, gas is sucked in at the intake port (2/1). The gas passes through the dirt trap sieve (2/2), flows past the open anti-suckback valve (2/3) and then enters the pump chamber. In the pump chamber, the gas is passed on and compressed, after the inlet aperture is closed by the vane.

The oil injected into the pump chamber is used for sealing and lubricating. The slap noise of the oil in the pump which usually occurs when attaining the ultimate pressure is prevented by admitting a very small amount of air into the pump chamber.

The compressed gas in the pump chamber is ejected through the exhaust valve (2/10). The oil entrained in the gas is coarsely trapped in the internal demister (2/11); there the oil is also freed of mechanical impurities. The gas leaves the TRIVAC B through the exhaust port.

During compression, a controlled amount of air – the so-called gas ballast – can be allowed to enter the pump chamber by opening the gas ballast valve. The gas ballast stops condensation of vapours in the pump chamber up to the limit of the water vapour tolerance as specified in the technical data for the pump.

Description

The gas ballast valve is opened (position I) and closed (position 0) by turning the gas ballast knob (7/5) on the front.

To enable the TRIVAC B to be used at intake pressures as high as 1,000 mbar, a special lubricating system was developed featuring force-lubrication of the sliding bearings.

An oil pump (3/6) pumps the oil from the oil reservoir (3/5) into a pressure-lubrication system which supplies oil to all bearing points (3/2). From there the oil enters the pump chamber area (3/4) of the vacuum pump.

The oil pump is fitted in the front end plate on the coupling side of the pump module. The oil suction line is placed low, resulting in a large usable oil reservoir.

The oil is separated from the gas in the TRIVAC B in two steps as described above. First, small droplets are coalesced into large drops in the internal demister (2/11) fitted above the exhaust valve (2/10). Then, the large drops fall into the oil reservoir as the exhaust gas is diverted by the inner walls of the oil case. Thus a low loss of oil is obtained. This and the large usable oil reservoir ensure long intervals between oil changes even at high intake pressures.

The vacuum is maintained by the TRIVAC B through an integrated hydro-pneumatic anti-suckback valve (2/3) which is controlled via the oil pressure.

During operation of the TRIVAC B the control piston (4/3) remains sealed against a spring (4/2) by the oil pressure. The valve disk (4/6) of the anti-suckback valve is held at the lower position by its own weight (valve open). When the pump stops (because it has been switched off or because of a failure), the oil pressure drops and the spring (4/2) presses the control piston (4/3) up. Thus a connection is provided between the oil case or the oil reservoir (4/1) and the piston (4/4) of the anti-suckback valve.

Due to the pressure difference between the oil case and the intake port the oil presses the piston (4/4) up and the valve plate (4/6) against the valve seat (4/5). The quantity of oil in the oil reservoir (4/1) prevents the entry of air into the intake port (2/1) at the beginning of this process.

After the oil has flowed out from the reservoir and when the valve plate rests on the valve seat, air follows in, which vents the pump chamber and forces the valve disc (4/6) against its seat.This effectively prevents backstreaming of oil or oil vapours. The anti-suckback valve (2/3) operates independently of the operating mode of the pump, i.e. also with gas ballast.

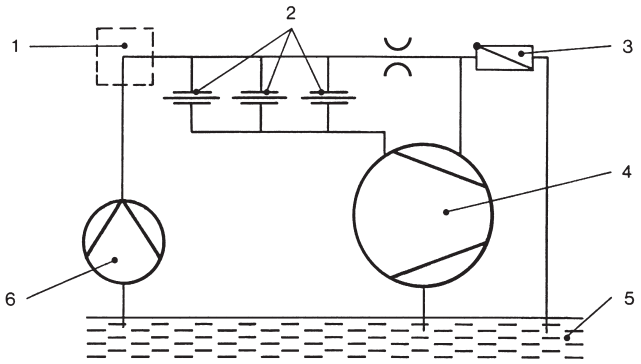

1 Accessories
2 Bearings
3 Non-return valve
4 Pump chamber of the TRIVAC
5 Oil reservoir
6 Oil pump

Fig. 3 Schematic of the lubricating system

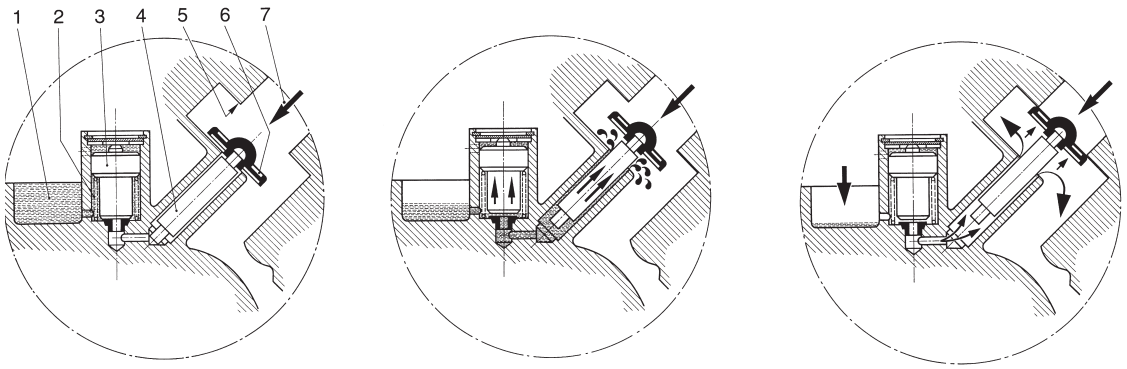

1 Oil reservoir
2 Spring
3 Control piston
4 Anti-suckback piston
5 Valve seat
6 Valve disk
7 Gas inlet

Fig. 4 Hydropneumatic anti-suckback valve

1.2 Lubricants

The standard TRIVAC B pumps are ready for operation with mineral oil.

For operating a TRIVAC B pump we specify our vacuum pump oils which are supplied with the pumps.

Description

1.3 Supplied Equipment

The equipment supplied with the TRIVAC-B pump includes:

Pump with motor,

1 centering ring,

1 centering ring with dirt trap,

2 clamping rings DN 25 KF,

Operating Instructions,

Spare Parts List.

For protection during shipment, the connection ports are each blanked off by rubber diaphragms and supporting rings.

Upon delivery from Leybold Cologne, the pumps are filled with the following types of oil:

P/N	Oil	Accessories
112 65/66/66J/75/76/76J	LVO100	
113 25/35	LVO100	
113 28/38	LVO100	without motor [1]
113 33/33J	LVO210	
140 160/170	LVO100	
140 160V	LVO210	
140 165	LVO310	Solenoid valve (2/2-way, 24 V, DC) for gas ballast with angled screw-in connection for 8 mm outside hose diameter, oil drain with G1/8 plug on 240 mm long plastic hose
898 199/199-1	L-1668-FM	Oil drain tap, cable with custom plug and pin assignment, adapter under the intake port for connecting the oil return with thread 9/16-18UNF-2B
898 208	LVO210	
898 229	LVO100	Oil drain tap, intake port (40 KF) for connecting the oil return with thread 9/16-18UNF-2B, cable with custom plug and pin assignment
898 698	LVO100	Oil drain tap
912 65-1/65-2	LVO100	
912 75-2	LVO100	
914 63-1	Ucon LB300 XY26	

[1]The fitting of a motor has to comply with the regulations of EN 60204-1 “Safety of machinery - Electrical equipment of machines - Part 1: General requirements”.

1.4 Technical Data

TRIVAC B		D 16 B two-stage	D 25 B two-stage
Nominal pumping speed [1]	$m^3 \cdot h^{-1}$ (cfm)	18.9 (11.1)	29.5 (17.4)
Pumping speed [1]	$m^3 \cdot h^{-1}$ (cfm)	16.5 (9.7)	25.7 (15.1)
Ultimate partial pressure without gas ballast [1]	mbar Torr	10^{-4} $0.75 \cdot 10^{-4}$	10^{-4} $0.75 \cdot 10^{-4}$
Ultimate total pressure without gas ballast [1]	mbar Torr	$< 2 \cdot 10^{-3}$ $< 1.5 \cdot 10^{-3}$	$< 2 \cdot 10^{-3}$ $< 1.5 \cdot 10^{-3}$
Ultimate total pressure with gas ballast [1]	mbar Torr	$< 5 \cdot 10^{-3}$ $< 3.8 \cdot 10^{-3}$	$< 5 \cdot 10^{-3}$ $< 3.8 \cdot 10^{-3}$
Water vapour tolerance [1]	mbar Torr	25 18.8	25 18.8
Water vapour capacity	$g \cdot h^{-1}$	305	476
Oil filling, min./max.	l	0.45 / 1.0	0.6 / 1.4
Noise level to DIN 45 635 without/with gas ballast	dB (A)	54 / 56	54 / 56
Admissible ambient temperature [2] w/ continuous operations at startup	 °C °C	 +5 ... +40 +12 ... +40	 +5 ... +40 +12 ... +40
Relative atmospheric humidity	%	max. 90	max. 90
Mains fusing [3]	A	16	16
Weight	kg	26	32
Connections, intake and exhaust side	DN	25 KF	25 KF

[1] In acc. with DIN 28 400 et seq. valid for LVO 100. For other oils the ultimate pressure may differ.

[2] The motor may accelerate with a delay when simultaneously an undervoltage is present at the motor and the pump is at the minimum permissible and ambient temperature. Under such operating conditions the motor protection switch may respond. In this case the motor may be started again.

[3] Europe

Description

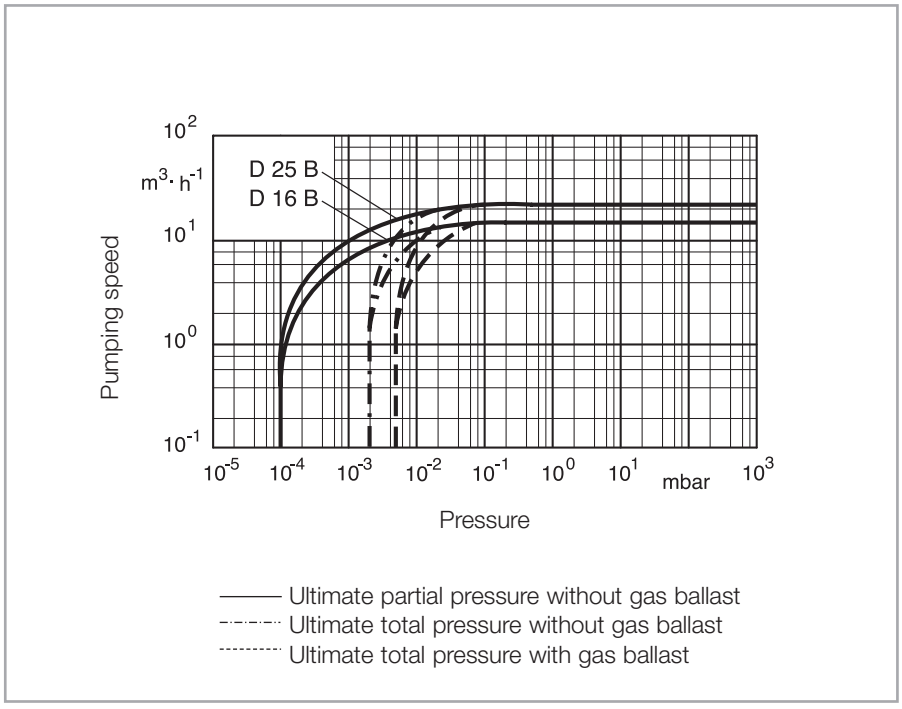

Fig. 5 Pumping speed characteristics for the TRIVAC B pumps (50 Hz operation, SI units)

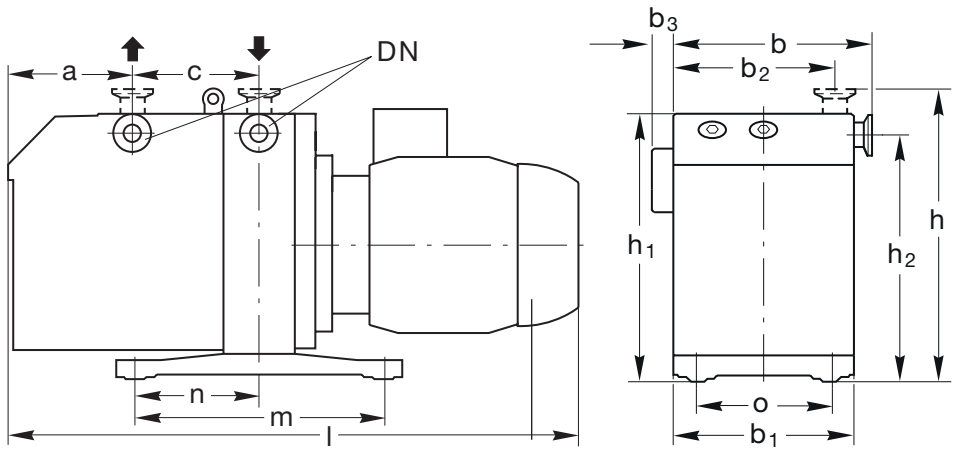

TRIVAC	DN	a	b	b_1	b_2	b_3	c	h	h_1	h_2	m	n	o
D 16 B	25 KF	82	185	170	151	5.5	135	263	248	228	280	140	132
D 25 B	25 KF	142	185	170	151	5.5	135	263	248	228	280	140	132

Fig. 6 Dimensional drawings for the TRIVAC B pumps (all dimensions are approximate and in mm; l (length) cf. next pages)

Cat. Nos. of the pumps	**112 66/76, 113 33**	**112 66J /76J / 133 33J**	**140 160 /160V /170**
Motor type	**AMPH 80Z AA4**	**AMPH 80Z AA4**	**EeDA 80L/4**
Motor L/N	**6506939-IE3**	**6520730-IE3**	**20010409**
Compliance Certification number	CC#046A		
IP rating	IP55		IP55
Operating mode IEC34 / Duty	S1		S1
Isolation class	F		F
Phases	3~		3~
Nom. efficiency (η) at nom. voltage: 50 Hz and 100 % of nom. load 50 Hz and 75 % of nom. load 50 Hz and 50 % of nom. load 60 Hz and 100 % of nom. load 60 Hz and 75 % of nom. load 60 Hz and 50 % of nom. load	82.5 % (at 400 V) 83.0 % (at 400 V) 81.5 % (at 400 V) 85.5 % (at 460 V) 85.1 % (at 460 V) 83.1 % (at 460 V)		
Efficiency class	IE3 Premium Efficiency Class	IE3 JIS	due to missing IE3 not for use in the US
Manufacturer	Lafert SpA San Donà di Piave Italy		Emod Motoren GmbH Bad Salzschlirf Germany
Number of poles	4		4
Nom. output power at 50 Hz Nom. output power at 60 Hz	750 W 750 W		750 W
Nom. in frequency	50 Hz 60 Hz		50 Hz
Nom. voltage range and nom. current at 50 Hz	200-240 V / 3.8 A 200 V / 3.8 A (IE3) 380-400 V / 1.9 A 380-400 V / 1.9 A (IE3)	180-220 V / 3.6 A 200 V / 3.6 A (IE3) 311-380 V / 2.1 A 346 V / 1.9 A (IE3)	219-242 V / 3.35 A 380-420 V / 1.94 A
Nom. voltage range and nom. current at 60 Hz	200-240 V / 3.8 A 208-240 V / 3.4 A (IE3) 380-480 V / 1.9 A 416-480 V / 1.7 A (IE3)	200-240 V / 3.4 A 220 V / 3.1 A (IE3) 342-418 V / 1.9 A 380 V / 1.8 A (IE3)	
Tolerances of voltage range[1)]	±10 %		±5 %
Nom. speed at 50 Hz Nom. speed at 60 Hz	1425 rpm 1730 rpm	1440 rpm 1745 rpm	1380 rpm
Disposal	local directives have to be considered		
Max. altitude above sea level	1000 m (NHN)		
Max. ambient temp. when operating[1)]	40 °C		
T-board / plug	9 pins		6 pins
Certificates[2)] of the motor	CE ENERGY c UL us Energy Verified CE		CE Ex II 3/3G Ex h IIC T4 / Ex h IIC T3
Length of the pump	509 mm (D 16 B) 571 mm (D 25 B)		510 mm (D 16 B) 572 mm (D 25 B)

Description

Cat. Nos. of the pumps	**112 65/75**	**140 165**
Motor type	**LS90PR/T**	**E8CD4B2-8-122**
Motor L/N	**38066003**	**110002915**
Compliance Certification number		
IP rating	IP44	IP44
Operating mode IEC34 / Duty	S1	H
Isolation class	F	F
Phases	1~	1~
Manufacturer	Moteurs Leroy-Somer 16015 Angoulême Cedex France	Hanning-Elektro-Werk GmbH & Co. KG 33813 Oerlinghausen Germany
Number of poles	4	4
Nom. output power at 50 Hz Nom. output power at 60 Hz	750 W 750 W	590 W 680 W
Nom. in frequency	50 Hz 60 Hz	50 Hz 60 Hz
Nom. voltage range and nom. current at 50 Hz	218 V / 5.0 A 242 V / 5.6 A	218-242 V / 4.2 A
Nom. voltage range and nom. current at 60 Hz	218 V / 5.7 A 242 V / 5.5 A	218-242 V / 3.0 A
Tolerances of voltage range[1)]	±5 %	±5 %
Nom. speed at 50 Hz Nom. speed at 60 Hz	1460 min^{-1} 1750 min^{-1}	1420 min^{-1} 1690 min^{-1}
Disposal	local directives have to be considered	local directives have to be considered
Max. altitude above sea level	1000 m (NHN)	1000 m (NHN)
Max. ambient temperature when operating[1)]	40 °C	40 °C
T-board / plug	Mains cord (2 m) with shock-proof CEE plug	Cable with custom plug
Certificates[2)] of the motor	CE	CE
Length of the pump	521 mm (D 16 B) 583 mm (D 25 B)	508 mm (D 16 B)

Cat. Nos. of the pumps	**113 25/35**
Motor type	**E9SF4AB3-100**
Motor L/N	**110001212**
Compliance Certification number	
IP rating	IP54
Operating mode IEC34 / Duty	H
Isolation class	F
Phases	1~
Manufacturer	Hanning-Elektro-Werk GmbH & Co. KG 33813 Oerlinghausen Germany
Number of poles	4
Nom. output power at 50 Hz Nom. output power at 60 Hz	750 W 750 W
Nom. in frequency	50 Hz 60 Hz
Nom. voltage range and nom. current at 50 Hz	208 – 252 V / 5.7 A
Nom. voltage range and nom. current at 60 Hz	208 – 252 V / 4.9 A
Tolerances of voltage range[1)]	±5 %
Nom. speed at 50 Hz Nom. speed at 60 Hz	1420 min^{-1} 1680 min^{-1}
Disposal	local directives have to be considered
Max. altitude above sea level	1000 m (NHN)
Max. ambient temperature when operating[1)]	40 °C
T-board / plug	Multi-pin plug at the junction box Mains cord 20081091 (1.8 m) with Schuko plug CEE 7/7 (included in delivery) Mains cord 20081097 (1.8 m) with UK plug BS 1363 (optional) Mains cord 20081099 (1.8 m) with CH plug SEV 1011 (optional Mains cord 20081141 (1.8 m) with US plug NEMA 6-15P (optional)
Certificates[2)] of the motor	CE
Length of the pump	515 mm (D 16 B) 577 mm (D 25 B)

Description

Cat. Nos. of the pumps	**898 199/199-1**	**898 208, 912 65-1**
Motor type	**5K49PN4167**	**56B17F5558D P**
Motor L/N	**72260135**	**72260117**
Compliance Certification number		
IP rating		IP43
Operating mode IEC34 / Duty	continuous	continuous
Isolation class	B	F
Phases	3~	1~
Manufacturer	Marathon Electric Motors Wausau, WI 54401 USA	Marathon Electric Motors Wausau, WI 54401 USA
Number of poles	4	4
Nom. output power at 50 Hz Nom. output power at 60 Hz	750 W 750 W	560 W 560 W
Nom. in frequency	50 Hz 60 Hz	50 Hz 60 Hz
Nom. voltage range and nom. current at 50 Hz	208-220 V 380 V	115 V / 13 A 208-230 V / 5.5-6.5 A
Nom. voltage range and nom. current at 60 Hz	208-230 V / 3.6 A 460 V / 1.7 A	115 V / 9.4 A 208-230 V / 4.8-4.7 A
Tolerances of voltage range[1)]	±5 %	±5 %
Nom. speed at 50 Hz Nom. speed at 60 Hz	1500 min^{-1} 1725 min^{-1}	1425 min^{-1} 1725 min^{-1}
Disposal	local directives have to be considered	local directives have to be considered
Max. altitude above sea level	1000 m above sea level	1000 m (NHN)
Max. ambient temperature when operating[1)]	40 °C	40 °C
T-board / plug	Cable with custom plug	Mains cord (1.8 m) with NEMA 5-15P plug
Certificates[2)] of the motor		
Length of the pump	536 mm (D 16 B)	562 mm (D 16 B)

Cat. Nos. of the pumps	**898 229**	**898 698**
Motor type	**5K49UN4305AV**	**35R869R777G1**
Motor L/N	**72260156**	**72260187**
Compliance Certification number		
IP rating		IP44
Operating mode IEC34 / Duty	continuous	continuous
Isolation class	F	F
Phases	3~	1~
Manufacturer	Marathon Electric Motors Wausau, WI 54401 USA	Baldor Electric Company Fort Smith, AR 72901 USA
Number of poles	4	4
Nom. output power at 50 Hz Nom. output power at 60 Hz	1100 W 1100 W	750 W 750 W
Nom. in frequency	50 Hz 60 Hz	50 Hz 60 Hz
Nom. voltage range and nom. current at 50 Hz	200-240 V / 4.3-3.8 A 380-415 V / 2.5-2.4 A	110 V / 15 A 220 V / 7.5 A
Nom. voltage range and nom. current at 60 Hz	200-240 V / 4.3-3.8 A 380-415 V / 2.5-2.4 A	115 V / 12.4 A 208-230 V / 6.3-6.2 A
Tolerances of voltage range[1)]	±5 %	±5 %
Nom. speed at 50 Hz Nom. speed at 60 Hz	1425 min^{-1} 1725 min^{-1}	1500 min^{-1} 1800 min^{-1}
Disposal	local directives have to be considered	local directives have to be considered
Max. altitude above sea level	1000 m (NHN)	1000 m (NHN)
Max. ambient temperature when operating[1)]	40 °C	40 °C
T-board / plug	3 wires (L1, L2, L3) resp. Plug with assignment L1, L2, L3, GND	Multi-pin plug at junction box Mains cord (1.8 m) E72127877 with US plug NEMA 5-15P Mains cord (1.8 m) E72127878 with US plug NEMA 6-15P
Certificates[2)] of the motor		
Length of the pump	610 mm (D 25 B)	582 mm (D 16 B)

Description

Cat. Nos. of the pumps	**912 65-2**	**912 75-2**
Motor type	**JQH 56B17F5592E-P**	**56B17F5577D P**
Motor L/N	**72260005**	**72260022**
Compliance Certification number		
IP rating	TEFC	IP44
Operating mode IEC34 / Duty	continuous	continuous
Isolation class	B	F
Phases	1~	1~
Manufacturer	Marathon Electric Motors Wausau, WI 54401 USA	Marathon Electric Motors Wausau, WI 54401 USA
Number of poles	4	4
Nom. output power at 50 Hz Nom. output power at 60 Hz	550 W 550 W	1100 W 1100 W
Nom. in frequency	50 Hz 60 Hz	50 Hz 60 Hz
Nom. voltage range and nom. current at 50 Hz	208-230 / 5.5-6.5 A	200-230 V / 9.6-9.2 A
Nom. voltage range and nom. current at 60 Hz	208-230 / 4.8-4.7 A	200-230 V / 9.0-8.0 A
Tolerances of voltage range[1)]	±5 %	±5 %
Nom. speed at 50 Hz Nom. speed at 60 Hz	1500 min^{-1} 1800 min^{-1}	1425 min^{-1} 1725 min^{-1}
Disposal	local directives have to be considered	local directives have to be considered
Max. altitude above sea level	1000 m (NHN)	1000 m (NHN)
Max. ambient temperature when operating[1)]	40 °C	40 °C
T-board / plug	Mains cord (1.8 m) with US plug NEMA 6-15P	Mains cord (1.8 m) with US plug NEMA 6-15P
Certificates[2)] of the motor		
Length of the pump	538 mm (D 16 B)	662 mm (D 25 B)

[1] The motor may accelerate with a delay when simultaneously an undervoltage is present at the motor and the pump is at the minimum permissible and ambient temperature. Under such operating conditions the motor protection switch may respond. In this case the motor may be started again.

[2] Key to the certificates:

CSA certification mark for products certified in accordance with CSA for Canada.

UL certification mark for approved components for the USA.

UL certification mark for energy efficiency for listed products and approved components for Canada and the USA.

Observe the data given on the motor nameplate.
For special pumps please note the information contained in the supplemental sheet.

NOTICE



1.5 Accessories

Leybold accessories listed below for this pump, like inlet screen, for example, are also suited for operation in explosion hazard areas. The same conditions as for the pump apply.

WARNING



When using other accessories with the pump, it needs to be ensured that these are suited for operation in explosion hazard areas.

	Part No.
Separator AK 16-25	188 11
Exhaust filter AF 16-25	189 11
Drain tap for condensate trap, exhaust filter, oil drain of the pump, vacuum-tight	190 90
Exhaust filter with lubricant return AR 16-25	189 21
Exhaust filter with lubricant return ARS 16-25	189 56
Dust filter[1]: Filter housing FH 25	140125T
Dust filter element DF 16-25	140117S
Dust separator	186 11
Adsorption trap[1]: Filterhousing FH 25	140125T
Adsorption insert RF 16-25	140118A
Active carbon	178 10
Zeolite	854 20
Aluminium oxide	854 10
Oil filter OF 4-25	101 91
Chemical filter CF 4-25	101 96
Chemical oil filter with safety isolation valve CFS 16-25	101 76
Adaptor for gas ballast port	
M 16 x 1.5 - DN 16 KF	168 40V01
M 16 x 1.5 - 3/8 inch NPT	99 175 011
Inert-gas-system 16-25 (for BCS versions)	161 76
Limit switch system 16-25	161 06

[1] Not approved for ATEX applications

NOTICE



Use only the kind of oil specified by Leybold.

2 Transport and Storage

CAUTION



To lift the pumps only use the crane eyes provided for this purpose, respectively use corresponding lifting facilities. When connecting or removing the pump, do not move under hoisted loads.

If possible transport the pump in its original packaging, if not available exercise due care.

Pumps which are filled with operating agents must only be moved while standing upright. Otherwise oil may escape. Avoid any other orientations during transport. Check the pump for the presence of any oil leaks, since there exists the danger that someone may slip on spilt oil.

Before putting a pump into operation once more it should be stored in a dry place preferably at room temperature (20 °C). Before the pump is shelved it must be properly disconnected from the vacuum system, purged with dry nitrogen and the oil should be changed too.

The inlets and outlets of the pump must be sealed with the shipping seals which are provided upon delivery.

The gas ballast switch must be set to the “0” position and if the pump is to be shelved for a longer period of time it should be sealed in a PE bag containing some desiccant (silica gel).

When a pump is put into operation after it has been shelved for over one year, standard maintenance should be run on the pump and the oil should also be exchanged (see Section 5.4). We recommend that you contact the Leybold Service.

3 Installation

NOTICE



Instructions for the operating personnel
Before conducting any kind of assembly work the personnel must be informed about potential hazards. Observe Safety Information 0.1 to 0.6.

3.1 Placement

DANGER



Pumps marked as



II 3/-G Ex h IIC T4 (50 Hz) Gc
II 3/-G Ex h IIC T3 (60 Hz) Gc
12 °C ≤ Ta ≤ 40 °C

are not suited for installation in the explosion hazard areas.
Pumps marked as



II 3/3G Ex h IIC T4 (50 Hz) Gc / Ex h IIC T3 (50 Hz) Gc
12 °C ≤ Ta ≤ 40 °C

may only be used in Zone 2.

If the pump (outside) has been certified for operation in areas with explosive atmospheres, the special information contained in the Operating Instructions for the electric motor for installation in explosive areas need to be complied with. Additional information is provided in the European standards EN 60079-14 “Electrical apparatus for explosive gas atmospheres Part - 14” and EN 60079-17 “Electrical apparatus for explosive gas atmospheres - Part 17”.
Pay attention to the safety information 0.5.

The TRIVAC B pump can be set up on a flat, horizontal surface. Rubber feet under the coupling housing ensure that the pump can not slip.
If you wish firmly install the pump in place, insert bolts through bore holes in the rubber feet.

CAUTION



Risk of toppling
Max. tilt for the pump is 10° from the vertical.

If you wish firmly install the pump in place, insert bolts through bore holes (Ø 7 mm) in the rubber feet.

NOTICE



The rubber feet act as vibration absorbers. They must therefore not be compressed by screws.
The site chosen should allow adequate air circulation to cool the pump (keep front and rear unobstructed).
The oil-level glass must be visible.

Note the ambient conditions during operation
The ambient temperature should not exceed +40 °C (104 °F) and not drop below +12 °C (55 °F) (see Section 4.3.3).
For installation sites over 1000 m (NHN) and/or a relative atmospheric humidity of over 90 %, you must discuss this with Technical Sales.

When failing, capacitors may heat up excessively and generate smoke. Therefore the pump must be placed with a sufficient clearance from inflammable or combustible material. There exists the risk of fire! The max. amount of heat given off approximately corresponds to the rated motor power.
Install the pump such that only minimal quantities of dust can deposit themselves on the surfaces. In those cases where dust deposits form, measures need to be introduced which ensure that these are removed on a regular basis.
The maximum gas inlet temperature must not exceed 60 °C.
The maximum pressure at the inlet must not exceed atmospheric pressure (approximately 1013 mbar). Never apply overpressures to the pump's inlet.
The maximum exhaust pressure must not exceed 0.5 bar (g).

NOTICE



3.2 Conforming Utilization

TRIVAC B pumps can pump gases and vapours, and evacuate vessels or vacuum systems in the fine vacuum range.

The pumps are suited for pumping water vapour within the specified water vapour tolerance limits. Avoid vapours that can condense into liquids when being compressed inside the pump, if these substances exceed the vapour tolerance of the pump. In the case of wet processes we recommend the installation of liquid separators upstream and downstream of the pump as well as the use of the gas ballast.

Pumping of dust or much contaminated media
The pumps are not suited for pumping of liquids or media which carry large quantities of dust. Corresponding protection devices need to be provided.

NOTICE



Conforming utilisation of the TRIVAC pumps and compliance with the statutory requirements of the ATEX operator directive (99/92/EG) is the responsibility of the operator.

Our technical sales department is available for further advice in these matters.

3.2.1 Non-conforming Utilization

CAUTION



The TRIVAC B is not suited for pumping of:

- radioactive and toxic substances
- pyrophorous substances
- corrosive gases
- oxygen (or other highly reactive gases) at concentrations exceeding that of the atmosphere (> 21 % for oxygen).

NOTICE



The pumps are not suited for pumping of liquids or media which carry large quantities of dust. Corresponding protection devices need to be provided.

CAUTION



The standard pump is not suited for pumping of hazardous gases or vapours.

When cleaning a system in which a TRIVAC pump has been integrated,all parts in contact with the medium need to be compatible withthe cleaning agent so as to prevent a chemical reaction. Residues of the cleaning agent within the pump must be avoided.

Gas Composition

It is important to note that the composition of the gas at the inlet of the pump and at the exhaust may possibly differ. This may possibly have effect on the zone divisions.

Ignition Temperatures of Gases/Vapours

Pumps equipped with motors for 50 Hz operation are suited only for applications in which potentially explosive gas or vapour mixtures have an ignition temperature of over 135 °C.

Pumps equipped with motors for 60 Hz operation, are suited only for applications in which potentially explosive gas or vapour mixtures have an ignition temperature of over 200 °C.

The ignition temperatures of gases or vapours, sometimes also termed auto-ignition temperature can be taken from the material safety data sheets.

The pump is not suited for operation with reactive, aggressive or corrosive gases, or gases with an oxygen share exceeding 21 % by volume.

Potential Ignition Sources

An assessment of the ignition hazard was performed in accordance with the European standard EN ISO 80079-36 (EN ISO 80079-36 Non-electrical equipment for potentially explosive atmospheres – Part 1: Basic method and requirements). And based on this assessment the ignition sources listed in the following which may occur during operation of the pump, were determined:

Potential ignition sources	Remarks
Hot surfaces	Inside and outside due to gas compression, vane friction etc.
Hot gases	Are produced within the pump and ejected at the exhaust
Mechanical sparks	Will not occur during normal operation - the surfaces within the pump are covered with oil, sufficient clearances outside the pump
Electric sparks	Outside the pump due to motor, accessories
Static electricity	Possible, provided conducting parts of the pump are not connected to ground; Possible, by dry wiping of plastic parts. During operation the handle of category 3/3G pumps must be pushed-in.
Chemical reactions	Possible with the process liquid or the process gas

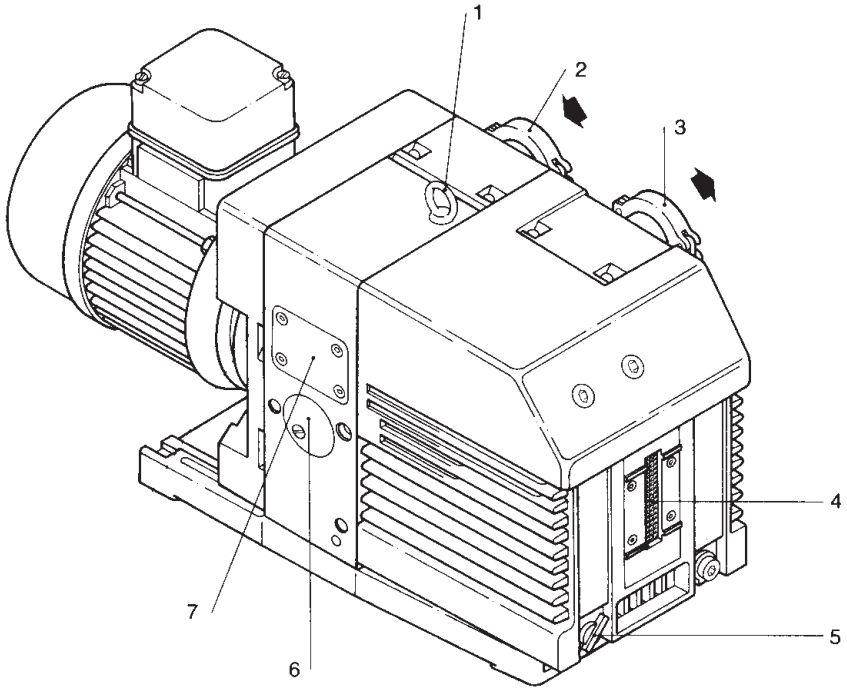

1 Eye bolt for moving the pump
2 Intake port
3 Exhaust port
4 Oil-level glass
5 Gas ballast knob (0 = OFF, I = ON)
6 Connection for Inertgas
7 Connection for CF, OF

Fig. 7 Connections and controls

3.3 Connection to the System

Before connecting the TRIVAC B, remove the shipping seals from the connection flanges (7/2) and (7/3).

Retain the shipping seals in case you need to store the pump in the future.

The pump is shipped with intake and exhaust flanges mounted for horizontal connection of the connecting lines. You can easily convert the ports for vertical connection by removing the four capscrews, rotating the flanges as required, and reinstalling the capscrews. Connect the intake and exhaust lines with a centering ring and a clamping ring each. Use the centering ring with dirt trap for the intake port.

Connect the intake and exhaust line using anti-vibration bellows, without placing any strain on the pump.

The intake line must be clean. Deposits in the intake line may outgas and adversely affect the vacuum. The connecting flanges must be clean and undamaged.

The maximum throughput of the pump is equivalent to the pumping speed of the pump.

CAUTION



Note the specified cross sections for the connection lines

If exhaust gases must be collected or contained, do not allow the exhaust line to become pressurised. The pressure in the oil box must not exceed 0.5 bar (g). An exhaust line which is too small in diameter or which is blocked can result in the formation of overpressures within the pump. Possible consequences can be a damaged or even burst open pump. Thus the exhaust line must be checked from time to time to ensure that there are no obstructions.

Never operate the pump with a sealed exhaust line. There is the danger of injury.

NOTICE



Avoid backflowing condensate

Install the exhaust line with a downward slope (lower than the pump) so as to prevent condensate from flowing back into the pump. If this is not possible, insert a condensate trap.

Safely lead the exhaust gases away

Exhaust gases may, depending on the type of application, present a health hazard and/or may be detrimental to the environment.
The exhaust gases from the vacuum pump must be safely led away and subjected to post-treatment as required. In order to reduce the emission of oil vapours we recommend the installation of an additional exhaust filter (Leybold accessory, see Section 1.5). Depending on the type of application or the kind of pumped media, the corresponding regulations and information sheets must be observed.

CAUTION



When oil mist is to be removed from the exhaust flow we recommend the use of the exhaust filter with lubricant return (ARS) which is part of the TRIVAC system.

NOTICE



The maximum intake pressure must not exceed atmospheric pressure (1013 mbar).

The pumps may be operated with an inert gas ballast via a connection which is provided for this purpose. The cover plate (7/8) can be removed to gain access to this M 16 x 1.5 threaded port (7/6). Matching connectors are available (see Section 1.5).

In inlet pressure for the gas ballast should be about 1013 mbar (absolute) and sufficient quantities of gas must be available (about 1/10 of the pumping speed).

3.4 Electrical Connections

DANGER



Risk due to high voltages

Death or severe injury caused by an electric shock!

The electrical connections must only be provided by a trained electrician as specified, for example, by the regulations EN 50110-1. Note the national regulations of the country in which the equipment is being operated.

During all connection work, the mains power supply lines must be de-energised (lockout/tag out). In order to prevent the pump from running up unexpectedly after a mains power failure, the pump must be integrated in the control system in such a way that the pump can only be switched on again manually. This applies equally to emergency cut-out arrangements. Observe Safety Information 0.2.

3.4.1 Pump with Single-Phase AC Motor

Pumps equipped with a single-phase AC motor may be connected directly to the mains via the mains cord and the mains plug. Fusing must always be done in accordance with the national and local regulations for single phase mains (in Germany 16 amps, for example). The direction of rotation need not be checked as it is fixed. The motor is protected against overloading by a thermal overload switch with automatic resetting.

WARNING



P/N 140165 is not equipped with an On/Off switch.

The pump must only be used with the specified leak detection instrumentation.

Part number 898698 may be operated using the corresponding mains cord at a lower or higher voltage.

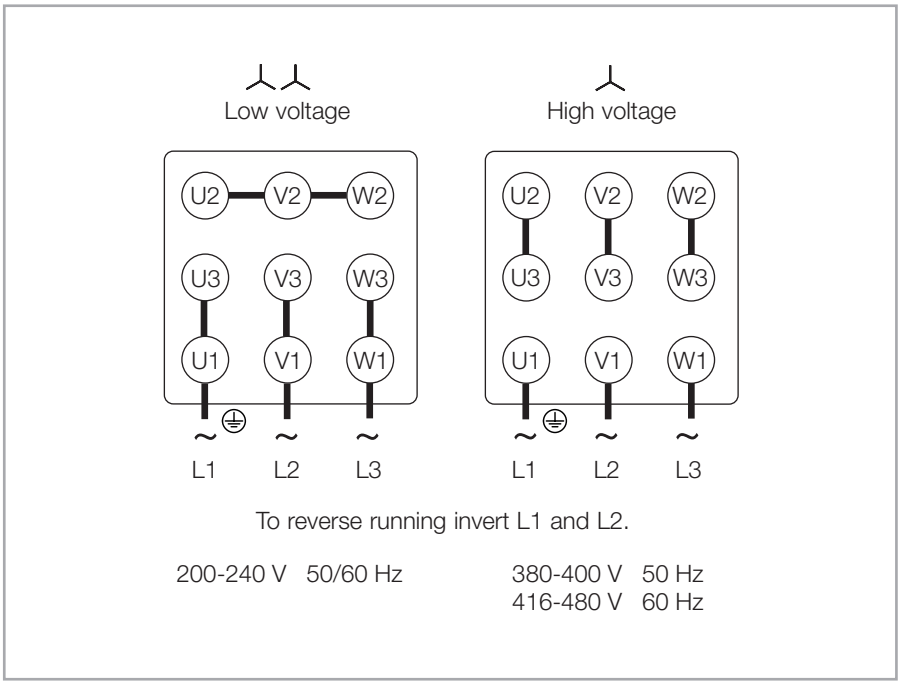

Fig. 8.1 Motor connection diagram (motor P/N: 6506939)

3.4.2 Pump with Three-Phase AC Motor

TRIVAC pumps with a three-phase motor are supplied without accessories for electrical connection. They must be connected via the appropriate cable, and a suitable motor protection switch.

When operating the unit at its operational limits (at an ambient temperature of 12 °C and at undervoltage, for example) it may be necessary to protect the electric motor against high start-up currents by installing an overload protector (Class 20 in accordance with IEC 60947, for example). Set up according to the information provided on the motor nameplate to meet local requirements for the motor protection switch. The local requirements may specify measures for reducing the start-up current (soft start, frequency controlled start-up, for example).

Set the switch in accordance with the rating on the motor nameplate.
Please observe the diagram at the motor.
After connecting the motor and after every time you alter the wiring, check the direction of rotation. To do so, briefly switch on the motor and check whether a suitable cover (e. g. a blank flange) is sucked on at the intake port. If not, interchange two phases of the connection.
Observe the direction arrow on the intermediate flange.
In the case of custom pumps please note the information provided on a separate sheet.

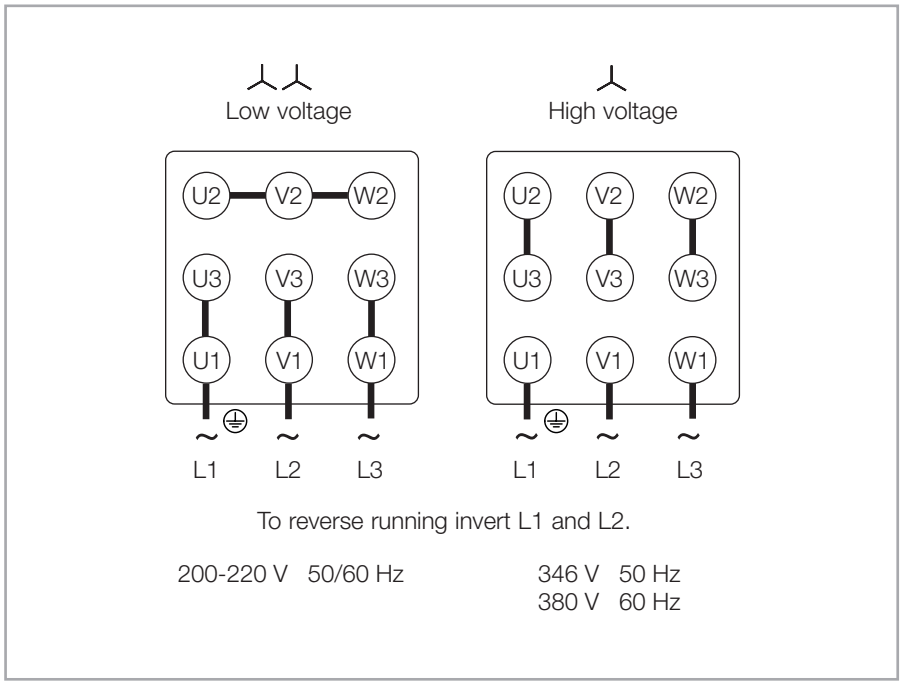

Fig. 8.2 Motor connection diagram (motor P/N: 6520730)

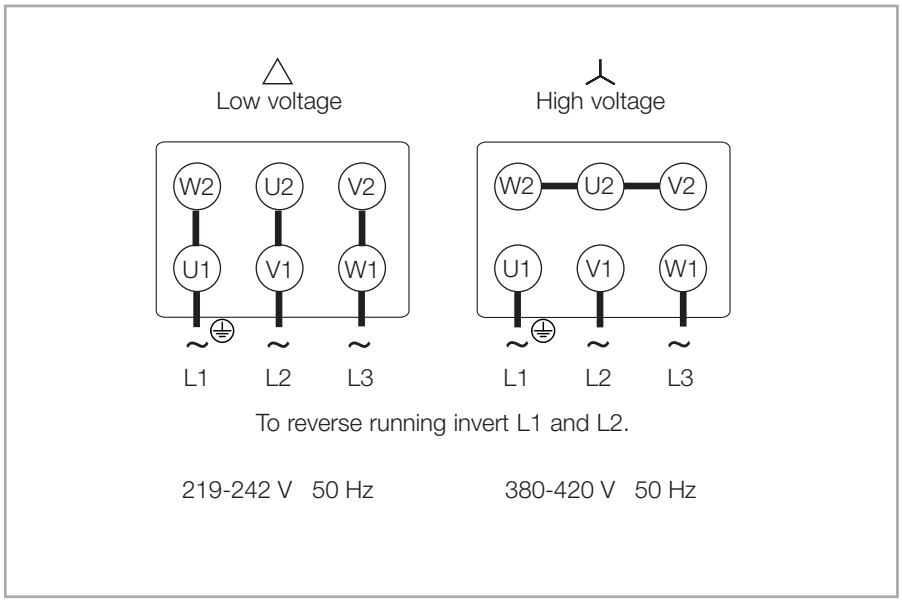

Fig. 8.3 Motor connection diagram (motor P/N: 20010409)

Part numbers 140 165, 898 199, 898 199-1, and 898 229 are equipped with custom plugs and for this reason must be connected only to the systems specifically specified for these pumps.

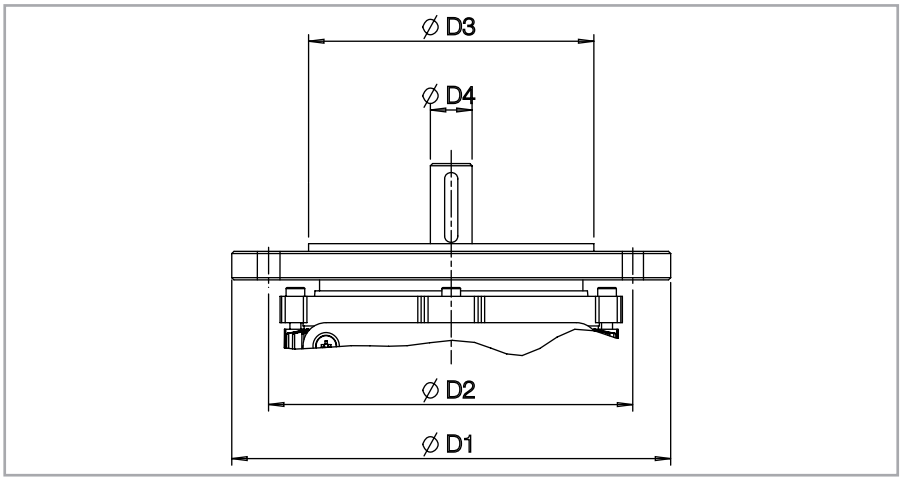

Fig. 8.4 Dimensions für specific motors (cf. table below)

3.5 Connecting the ATEX-Motor

TRIVAC pumps can also be ordered without a connected motor.

DANGER



When a motor is fitted by the customer, the operator will be responsible for selecting and operating the motor. Mounting the motor has an influence on the operation and reliability of various pump components, especially the coupling. Not complying with the technical data and installation information given hereinafter will void CE and ATEX conformity resulting in a rejection of any warranty claims.

The ATEX category for the outside area can change depending on the type of motor. Use only such motors which are approved for the respective category.

Specific motor data			D16B	D25B
Type			1-ph./3-ph. motor	1-ph./3-ph. motor
Model [1]			IM B14	IM B14
Size [1]			80	80
Flange				
Nom. power rating[2]	P	kW	0.55 / 0.75	0.75
max. rpm	n	1/min	1500 (T4) / 1800 (T3)	1500 (T4) / 1800 (T3)
Flange outside Ø	D1	mm	160	160
Pitch circle Ø, screws	D2	mm	130	130
Screw size	M	-	M8	M8
Number of screws	N	-	4	4
Centering Ø [2]	D3	mm	110j6	110j6
Shaft journal, motor [2]	D4	mm	19j6	19j6

[1] Motor IAW EN 60034-1, EN 60034-7

[2] Motors with standardized dimensions and power ratings IAW EN 50347.

The fitting of a motor has to comply with the regulations of EN 60204-1 “Safety of machinery - Electrical equipment of machines - Part 1: General requirements”.

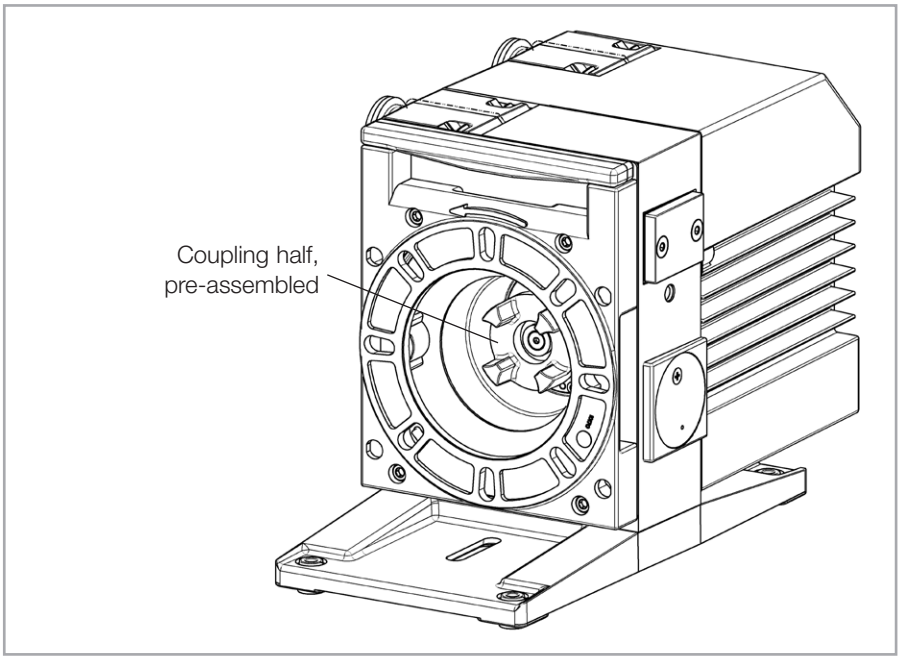

Fig. 8.5 Pump with preassembled coupling half

3.5.1 General Installation Information

Make sure that the respective motor complies with the information given in the corresponding Table (cf. Fig. 8.4).

For mounting the motors only use original parts supplied by Leybold.

- Intermediate flange and gasket
- Motor coupling half
- Coupling element
- Screws

NOTES

All mating surfaces and centering surfaces must be clean, undamaged and free of any paint residues.

Only air cooled motors must be used. The fan on the side of the motor is also required to cool the pump housing. If this air cooling arrangement is not present, then the surface temperatures may under certain circumstances exceed the permissible temperature range for the pump (T3, T4).

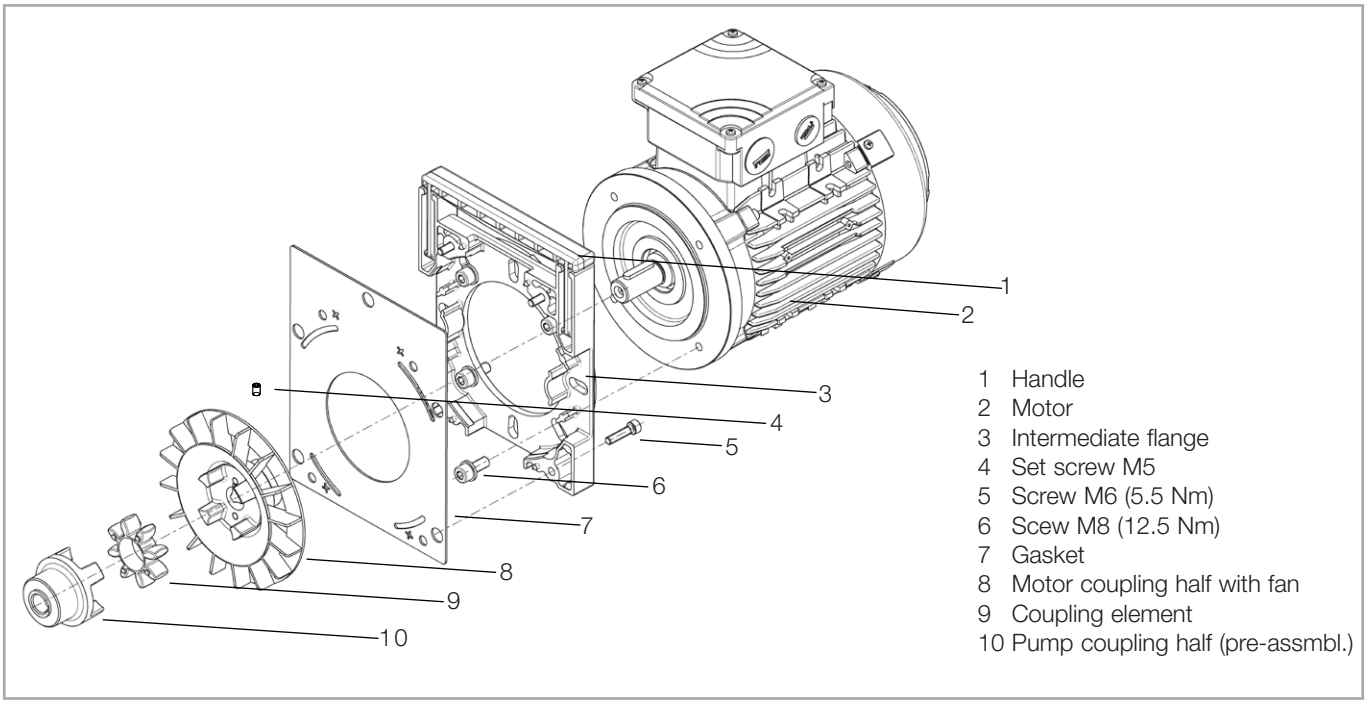

Fig. 8.6 Mounting the coupling half at the motor

3.5.2 Fitting the Coupling

The TRIVAC is supplied by Leybold with the coupling (Fig. 8.5) pre-assembled on the pump's shaft. Enclosed there are the coupling half (Fig. 8.6) for the motor side and the coupling element. Some pump types show a fan wheel at the coupling half of the motor side.

Tighten the M8 screws to mount the intermediate flange to the motor flange. Check to ensure that the handle has been correctly fitted within the intermediate flange. Fit the gasket (cf. Fig. 8.6 as well as for the torques).

Check the shaft journal and the shim ring for any damage.

Lightly grease shaft journal and the bore in the coupling half.

Warm the coupling half (to approximately 80 °C) and push, respectively press it on to the shaft journal.

The bores in the coupling are manufactured to tolerance class H7, the shaft journals of the motor to tolerance classes j6 resp. k6.

The axial distance L1 needs to be maintained (see Fig. 8.7).

When not complying with this requirement there exists the likelihood of a mechanical contact and thus the creation of sparks between the coupling halves.

WARNING



Affix the coupling half with the M5 set screw (torque = 2 Nm).

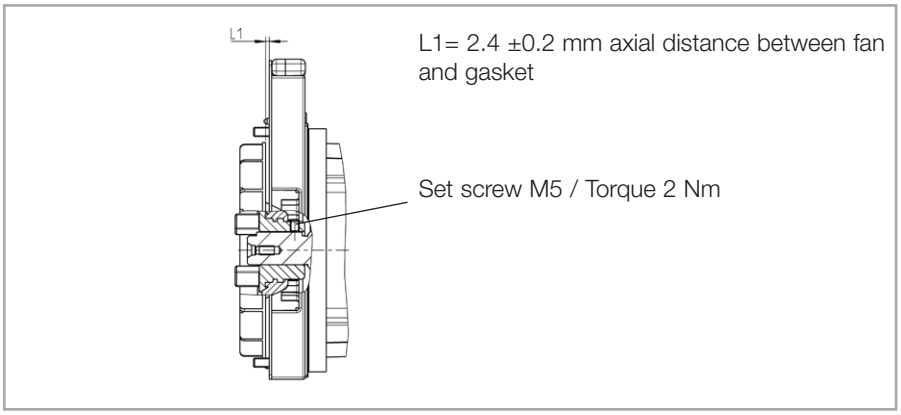

Fig. 8.7 Checking the axial distance of the coupling

3.5.3 Fitting the Motor

The bolts whicht must be used have been enclosed with the pump.

Insert the coupling element into the coupling half of the pump side.

Align the coupling halves and mount the intermediate flange (with motor), ensuring that the flange surfaces run in parallel. Any tilt of the motor axis will lead to an increased wear of the spider.

Fit and tighten the bolts (cf. Fig. 8.6 for torque).

3.5.4 Electrical Connection

Connect the motor according to section 3.4 and to the information of the manufacturer of the respective motor.

4 Operation

4.1 Media Compatibility

TRIVAC B pumps can pump condensable gases and vapours, provided that the gas ballast valve is open and the pump has attained its operating temperature.

4.2 Start-up

NOTICE



Each time before starting up check the oil level. The pump must never be operated with an oil level below the minimum.

Open all valves blocking the exhaust lines. The pump must never be operated with a blocked or constricted exhaust line.

Check the direction of rotation before starting the pump for the first time and after each change in the electrical connection (see Section 3.4).

On initial start-up, after prolonged idle periods or after an oil change, the specified ultimate pressure cannot be attained until the oil is degassed.

This can be done by running the pump for approx. 30 min. with the intake line closed and the gas ballast valve (7/5) open.

WARNING



Use matching accessories only
Before starting the pump ensure that the pump and the fitted accessories meet the requirements of your application and that safe operation can be guaranteed.

Start up the pump only after it has been fully installed
Never operate the pump with an open intake port. Vacuum connections as well as oil feed and discharge openings must not be opened while the pump is operating. Avoid exposing any part of the human body to the vacuum. There is the risk of suffering injury.
Observe Safety Information 0.1.

4.3 Operation

NOTICE



TRIVAC B pumps can pump condensable gases and vapours, provided that the gas ballast valve (7/5) is open and the pump has attained its operating temperature.

If exhaust gases must be collected or contained, do not allow the exhaust line to become pressurised. The pressure in the oil box must not exceed 0.5 bar (g). An exhaust line which is too small in diameter or which is blocked can result in the formation of overpressures within the pump. Possible consequences can be a damaged or even burst open pump. Thus the exhaust line must be checked from time to time to ensure that there are no obstructions.

4.3.1 Pumping of Non-Condensable Gases and Vapours

If the process contains mainly permanent gases, the TRIVAC B may be operated without gas ballast (position 0), provided that the saturation vapour pressure at operating temperature is not exceeded during compression.

If the composition of the gases to be pumped is not known and if condensation in the pump cannot be ruled out, run the pump with the gas ballast valve open and with dry inert gas in accordance with Section 4.3.2.

4.3.2 Pumping of Condensable Gases and Vapours

With the gas ballast valve open (position I) and at operating temperature, TRIVAC B pumps can pump pure water vapour up to the water vapour tolerance specified by the technical data. If the vapour pressure increases above the permissible level, the water vapour will condense in the oil of the pump.

When pumping vapours ensure that the gas ballast valve is open and that the pump has been warmed up for approximately 30 minutes with the intake line closed.

NOTICE



Pumping of Vapours

Vapour phases may only be pumped up to the permissible limit after the pump has attained its operating temperature.
During pumping, vapours may dissolve in the oil. This changes the oil properties and thus there is a risk of corrosion in the pump. Therefore, don't switch off the pump immediately after completion of the process. Instead, allow the pump to continue operating with the gas ballast valve open and the intake line closed until the oil is free of condensed vapours. We strongly recommend operating the TRIVAC B in this mode for about 30 minutes after completion of the process.

In cyclic operation, the TRIVAC B should not be switched off during the intervals between the individual working phases (power consumption is minimal when the pump is operating at ultimate pressure), but should continue to run with gas ballast valve open and intake port closed (if possible via a valve).

Once all vapours have been pumped off from a process (e.g. during drying), the gas ballast valve can be closed to improve the attainable ultimate pressure.

4.3.3 Operating Temperature

Proper operation of the TRIVAC B is ensured in the ambient temperature range between 12 °C to 40 °C (55 °F to 104 °F).

At operating temperature, the surface temperature of the TRIVAC B may lie over 70 °C (156 °F).

CAUTION



Beware of hot surfaces
There is the danger of receiving burns.
Observe Safety Information 0.3.

If – due to the ambient conditions – this temperature range is to be exceeded at either end of the range, contact Leybold Sales.

The motor may accelerate with a delay when simultaneously an undervoltage is present at the motor and the pump is at the minimum permissible and ambient temperature.
Under such operating conditions the motor protection switch may respond. In this case the motor may be started again.

4.4 Shutdown

If the TRIVAC B pump was exposed to aggressive and corrosive media, we recommend that you let the pump continue to operate even during long non-working intervals (e.g. overnight) with the intake line closed and the gas ballast valve open. This avoids corrosion during idle periods and difficulties when re-starting the pump under conditions where the lubricant has been chemically modified.

CAUTION



When pumping condensable media let the pump continue to operate with the gas ballast valve open and the intake line closed before switching off (see Section 4.3.2).

If the TRIVAC B running with mineral oil is to be shutdown for an extended period after pumping aggressive or corrosive media or if the pump has to be stored, proceed as follows:

WARNING



Pump and operating agents may be contaminated
If hazardous substances have been pumped, then these substances can escape from the pump and from the oil. Introduce adequate safety precautions; use gloves, face protection or a respirator, for example.
Observe Safety Information 0.4.

Drain the oil (see Section 5.4).

- Add clean oil until the oil-level is at the “min” mark and let the pump operate for some time.
- Then drain the oil and add clean oil until the oil level is at the “max.” mark.
- Seal the connection ports. Special conservation or anti-corrosion oils aren’t necessary.
- Please also take note of the information given in Section 2 Transport and Storing.

4.4.1 Controller/Mains Power Failure

CAUTION



In order to prevent the pump from running up unexpectedly after a mains power failure, the pump must be integrated in the control system in such a way that the pump can only be switched on again manually. This applies equally to emergency cut-out arrangements.

5 Maintenance

DANGER



Danger by High Electric Voltages
Death or severe injury caused by an electric shock!
The electrical connections must only be provided by a trained electrician as specified, for example, by the regulations EN 50110-1. Note the national regulations of the country in which the equipment is being operated.

Disconnect the electrical connections before disassembling the pump. Make absolutely sure that the pump cannot be accidentally started. Observe Safety Information 0.2.

Make sure that there is no potentially explosive atmosphere before conducting any maintenance work.

Capacitors of security class P2 (IAW EN 60252) are used with the pump's one-phase AC motors. The capacitor's life cycle is 10,000 h (life cycle category B acc. to EN 60252).Therefore we recommend to replace motor or capacitor before reaching the end of its life cycle.

If the pump has pumped harmful substances, contrary to what has been stated in Section 3.2, ascertain the nature of hazard and take adequate safety measures. Observe Safety Information 0.4.

When disposing of used oil, you must observe the applicable environmental regulations!

Due to the design concept, TRIVAC B pumps require very little maintenance when operated under normal conditions. The work required is described in the sections below. In addition to this, a maintenance plan is provided in Section 5.1.

NOTICE



All work must be carried out by suitably trained personnel. Maintenance or repairs carried out incorrectly will affect the life and performance of the pump and and will void any warranty claims.

Leybold offers practical courses on the maintenance, repair, and testing of TRIVAC B pumps. Further details are available from Leybold on request.

NOTICE



If the TRIVAC B is used in ambient air which is much contaminated, make sure that the air circulation and the gas ballast valve are not adversely affected.

When the TRIVAC B has been pumping corrosive media we recommend that possibly planned maintenance work be carried out immediately in order to prevent corrosion of the pump while it is at standstill.

In case of special designs and variants please always indicate the serial number.

Maintenance

5.1 Maintenance Plan

TRIVAC D 16 B TRIVAC D 25 B	Meas. / Test Qty. Op. / Aux. Materials	Interval	Remarks
Operate the pump for at least 1 h with gas ballast.		daily	Condensed water is thus removed from the oil
Check the oil level, if required change the oil.	Oil: LVO 100 or special and alternative oils see Section 1.2	daily, before switching on the system	Refill: Only after the pump has been switched off.
Check the quality of the oil, change the oil if required.	visually (all oils)	daily, before switching on the system	Visually: normally light and transparent, oil change is required when discolorations increase.
	chemically	six monthly	Chemically: to DIN 51558, when the neutralisation number exceeds 2; then an oil change will be required.
	mechanically	six monthly	Mechanically: when viscosity is 20 % above the one of fresh oil; then an oil change will be required.
Clean the inlet screen in the intake port, change it as required.	Suitable cleaning agent and compressed air.	six monthly	■ Clean inlet screen with a cleaning agent and blow it out with compressed air under a suction hood. ■ Replace the defective inlet screen. Use a cleaning agent which complies with the national/international specifications. **Observe the safety regulations when using cleaning agents.**
Clean the internal demister, change it as required.	Suitable cleaning agent.	annually	Already clean before the maintenanceinterval has elapsed when the noise level interval has elapsed when the noise level increases. ■ Clean internal demister with cleaning agent ■ Replace the defective internal demister ■ Dispose of the defective internal demister as special waste. Cleaning agent according to national/international specifications. **Observe the safety regulations when using cleaning agents.**
Check the edges of the teeth on the coupling element for any damages, change the coupling element as required.		annually	
Change the oil and clean the oil level glass.	Oil: LVO 100 Suitable cleaning agentand compressed air.	annually	Oil change: ■ First oil change after 100 operating hours. ■ Pump switched off and cold. Exchange the oil while the pump is cold so as to avoid releasing adsorbed gases. Clean the oil level glass with a cleaning agent and blow it out with compressed air under a suction hood. Use cleaning agents only corresponding to the national/international specifications. **Observe the safety regulations when using cleaning agents.** **Quantity of oil:** see Technical data
Check the fan of the pump and motor as well as the cooling fins on the motor for deposits, and clean as required.	Brush and industrial vacuum cleaner.	annually	Depending on the amount of dust check the pump and keep it clean. **Caution:** switch off the pump and ensure that it cannot run inadvertently (disconnect from the mains). Wipe plastic parts on the pumps of category 3G outside only with a moistened piece of cloth.

We recommend that you service the pump every two years covering the following:
- Cleaning
- Checking the individual components
- Exchange of all seals
- Functional check

This service should be run by the Leybold Service.

5.2 Leybold Service

Whenever you send a pump to Leybold, indicate whether the pump is contaminated or is free of substances which could pose a health hazard. If it is contaminated, specify exactly which substances are involved. You must use the form we have prepared for this purpose.

This form is available from:
www.leybold.com -> Downloads -> Download Documents.

Attach the form to the pump or enclose it with the equipment.

This statement detailing the contamination is required to satisfy legal requirements and for the protection of our employees.

Pumps which are not accompanied by a contamination statement will be returned to the sender.

Use secure shipping packaging
Package the pump such that it will not suffer any damage when being shipped and so that no oil or hazardous materials can escape from the packaging.

CAUTION



5.3 Monitoring the Oil Level

During operation of the TRIVAC B the oil level must always remain between marks (9/2) and (9/3) on the oil-level glass. The amount of oil must be checked and topped up as required.

CAUTION



Check and top up oil only after having shut down the pump first. Please note the safety information given in Sections 0.3 and 0.4.

Pumps which have not directly been delivered from Leybold, e.g. in systems, may have been filled with oils different from LVO 100. In this case a refill with LVO 100 may cause problems. Therefore check before the refill the kind of oil in the pump and fill in only suitable oil or change the oil.

P/N 140 165 is delivered with PAO oil LVO 310.

When operating the TRIVAC B in connection with the exhaust filter with lubricant return (AR or ARS) the checking intervals are extended.

When using the oil float switch (LSS) remote monitoring of the minimum oil level is possible.

5.3.1 Checking the Condition of the Oil

The ageing process for the standard operating fluid LVO 100 respectively (see Section 1.2) will depend very much on the area of application for the pump.

There exist the following ways of checking the oil:

a) Visual check
Normally the oil is clear and transparent. If the oil darkens, it should be changed.

b) Chemical check
The neutralisation number of LVO 100 oil is determined according to DIN 51558. If it exceeds 2, the oil should be changed.

c) Viscosity check
If the viscosity of LVO 100 at 25 °C exceeds a level of 240 mPas (20 % higher than the viscosity of fresh oil) an oil change is recommended.

If gases or liquids dissolved in the oil result in a deterioration of the ultimate pressure, the oil can be degassed by allowing the pump to run for approx. 30 min. with the intake port closed and the gas ballast valve open.

When wanting to check the oil, switch off the pump first and drain out from the warm pump the required amount of oil through the oil drain (9/4) into a beaker or similar.

Please note the safety information given in Section 5.4.

5.4 Oil Change

Pump and operating agents may be contaminated
Hazardous substances may escape from the pump and the oil. If there is the danger that the operating agent may present a hazard in any way due to decomposition of the oil, or because of the media which have been pumped, you must determine the kind of hazard and ensure that all necessary safety precautions are taken.use gloves, face protection or a respirator, for example.
Observe Safety Information 0.3 and 0.4.

Change the oil while the pump is cold so as to avoid releasing adsorbed gases. If releasing adsorbed gases is no problem, change the oil after the pump has been switched off and while the pump is still warm.

Risk of suffering burns
With the pump warm from operation, both pump and oil can get so hot that there is the risk of suffering burns. If required, wear gloves.

Check and top up oil only after having shut down the pump first.
When disposing of waste oil, observe the applicable environment protection regulations!
When changing the oil use the same type of oil which was previously in the pump. If you want to change the type of oil entirely please consult us first.

WARNING



NOTICE



The oil should be changed after the first 100 operating hours and then at least every 2,000 – 3,000 operating hours or after one year. At high intake pressures and intake temperatures and/or when pumping contaminated gases, the oil will have to be changed much more frequently.

Further oil changes should be made before and after long-term storage of the pump.

If the oil becomes contaminated too quickly, install a dust filter and/or oil filter (see Section 1.5).

Contact us for more information in this matter.

Maintenance

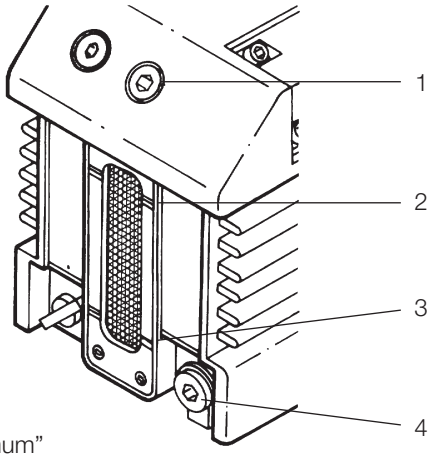

1 Oil-fill plug
2 Oil-level mark “maximum”
3 Oil-level mark “minimum”
4 Oil-drain plug

Fig. 9 Oil change

Required tool: Allen key 8 mm.

Remove the oil-drain plug (9/4) and let the used oil drain into a suitable container. When the flow of oil slows down, screw the oil-drain plug back in, briefly switch on the pump (max. 10 s) and then switch it off again. Remove the oil-drain plug once more and drain out the remaining oil.

Screw the oil-drain plug back in (check the gasket and reinstall a new one if necessary).

Remove the oil-fill plug (9/1) and fill in fresh oil.

Screw the oil-fill plug (9/1) back in.

The tightening torque for the bolts (9/1) and (9/4) has been specified at 10 Nm.

When an exhaust filter with lubricant return has been installed on the pump please also exchange the oil there.

NOTICE



We can only guarantee that the pump operates as specified by the technical data if the lubricants recommended by us are used.

5.5 Cleaning the Inlet Screen

A wire-mesh sieve is located in the intake port of the pump to act as a dirt trap for foreign objects. It should be kept clean to avoid a reduction of the pumping speed.

For this purpose, remove the dirt trap (2/2) from the intake port and rinse it in a suitable vessel with solvent. Then thoroughly dry it with compressed air.

If the dirt trap is defective, replace it with a new one.

NOTICE



The cleaning intervals depend on the application. If the pump is exposed to large amounts of abrasive materials, a dust filter should be fitted into the intake line.

5.6 Removing and Fitting the Internal Demister

Required tools: Allen keys size 5 and 8 mm

Required spare parts:

Gasket for oil case (10/7)	For material No., see spare parts list
Internal demister (10/3)	For material No., see spare parts list

The internal demister is spring-mounted in a frame. When it is clogged, it rises periodically to reduce the pressure difference created. The resultant noise at high intake pressures indicates that the internal demister is dirty.

Periodically clean or replace the internal demister; the maintenance interval depends on the application. Use a suitable solvent for cleaning.

Shutdown the pump and drain the oil (see Section 5.4).

Remove the four recessed screws (10/5) on the oil case (10/1). Don't remove the non-recessed screws; they hold the motor flange in place and need not be removed.

Pull the oil case forward off the pump.

Remove the gasket (10/7).

Press the spring buckles (10/2) sideways away from the frame (10/4).

Lift off the frame and remove the internal demister (10/3).

Clean all parts and check that they are in perfect condition; if not, replace them with new parts.

Reassemble in the reverse order.

Torque for the screws (10/5) is 8 Nm.

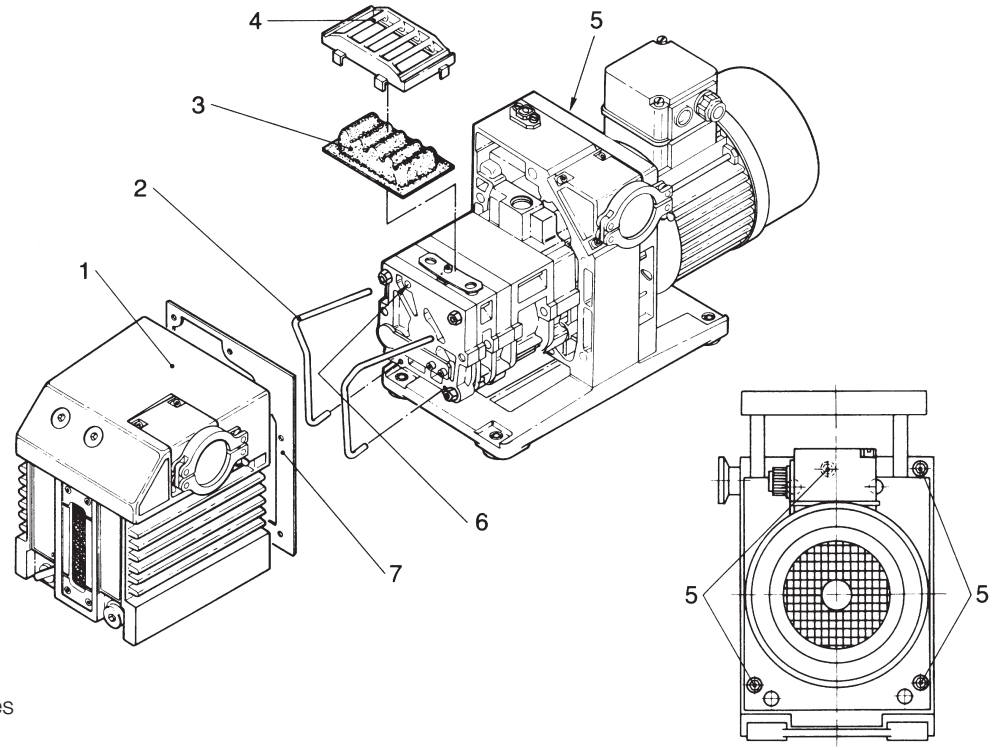

1 Oil case
2 Spring buckles
3 Demister
4 Frame for demister
5 Hex. socket screws
6 Silencing nozzle
7 Gasket

Fig. 10 Removal and fitting of the internal demister

1 Gasket
2 Handle
3 Hex. socket screws
4 Electric motor
5 Intermediate flange
6 Hex. socket screws
7 Coupling with fan blade
8 Threaded pin

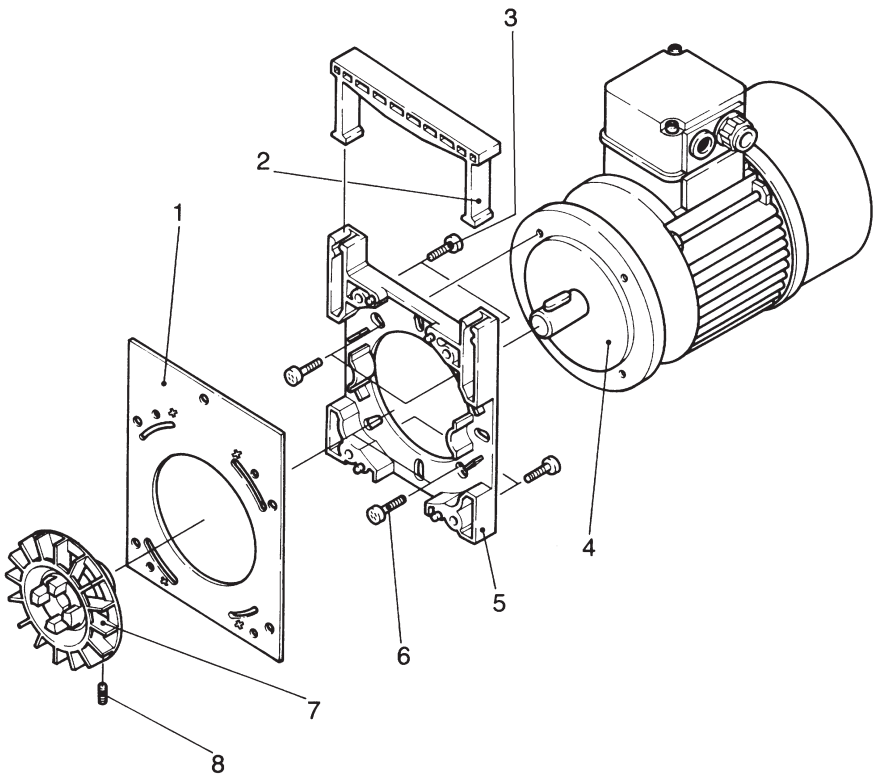

Fig. 11 Disassembly and reassembly of the electric motor

5.7 Disassembly and Reassembly of the Electric Motor

Risk due to high voltages

Death or severe injury caused by an electric shock!

Before starting work, always disconnect the motor from the mains. Pull the mains plug. Observe Safety Information 0.2.

DANGER



Required tools:

Screwdriver 1.0 x 5.5 mm (for junction box), open-jaw wrenches 7 mm and 19 mm (for junction box), Allan keys 3 mm, 5 mm, 6 mm, possibly a puller for the coupling.

Place the pump on its front side.

Unscrew the four **non-recessed** hex. socket screws (11/3).

Remove the intermediate flange (11/5) together with the electric motor (11/4).

Remove the handle (11/2).

Loosen the threaded pin (11/8) and pull the coupling (11/7) with the fan blade off the motor shaft.

Remove the gasket (11/1).

Unscrew the hex. socket screws (11/6).

Remove the electric motor (11/4).

Clean all parts and check that they are in perfect condition; if not, replace them with new parts.

Reassemble in the reverse order (cf. Section 3.5).

5.7.1 Checking the Coupling

Here the backlash between coupling cams and the flexible spider must be checked by a feeler gauge (see sketch 1).

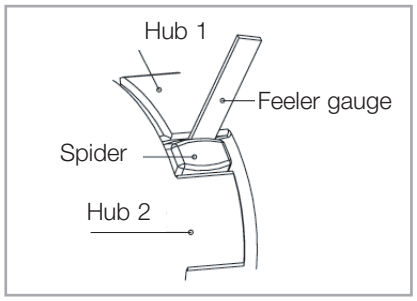

Sketch 1 Checking the wear limit

When reaching the limit of wear of max. friction, the spider must be exchanged immediately, independent of the inspection intervals.

The wear limit is at 3 mm!

In addition a visual inspection as to the presence of any damage needs to be done. If damaged, the coupling must be replaced.

Observe the information in the enclosed manufacturer's Operating Manual.

5.8 Replacing the Shaft Seal

Required tools:

Allen keys size 3, 5 and 8, flat-nose pliers, plastic hammer, shaft seal driver, possibly a puller for the coupling.

Required spare parts:

1x Shaft seal (12/8)	For material No., see spare parts list
Bushing (12/12)	For material No., see spare parts list

The TRIVAC B has one shaft seal. Oil marks under the coupling housing are signs of a damaged shaft seal.

The shaft seal can be replaced without removing or disassembling the pump module.

Shutdown the pump.

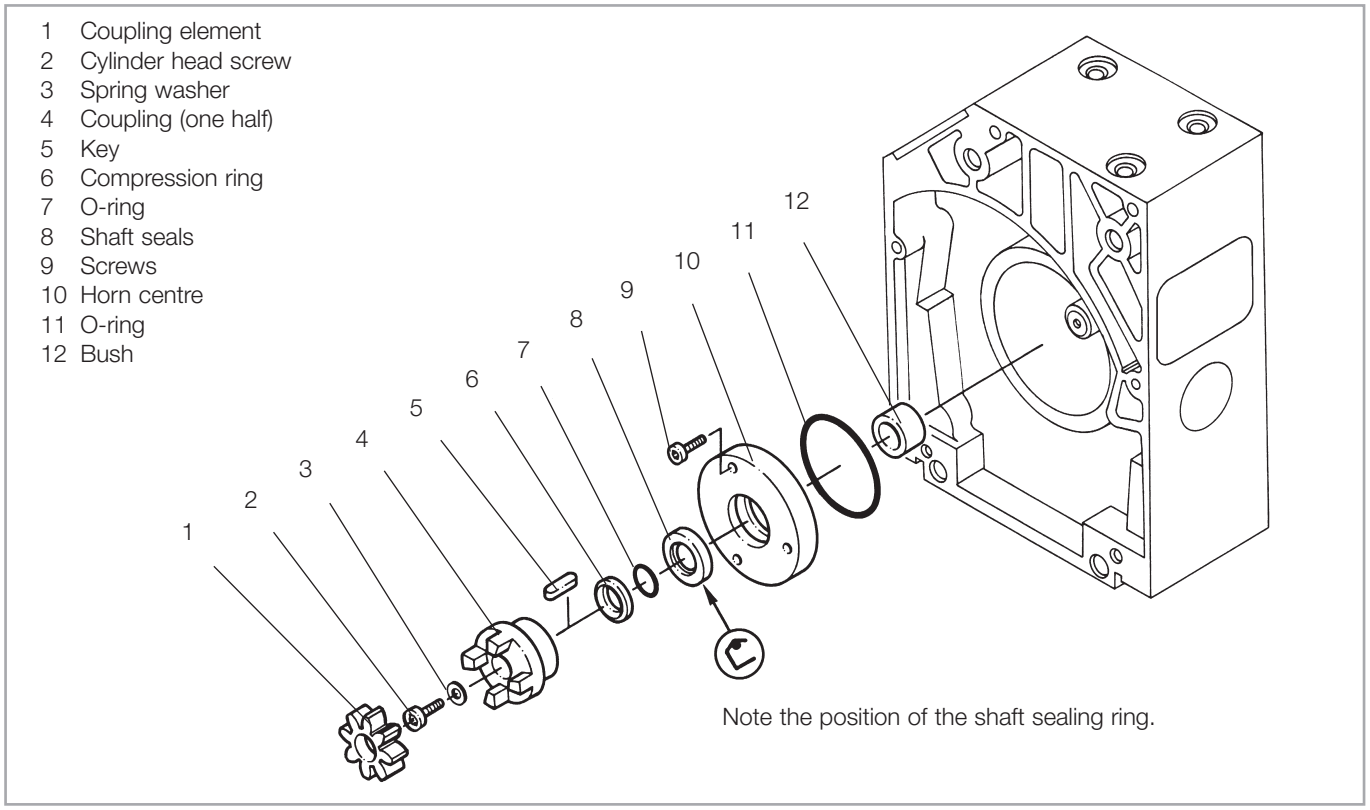

Fig. 12 Exchanging the shaft seal

Drain the oil (see Section 5.4).

Support the motor.

Unscrew the four **non-recessed** hex. socket screws (11/5) and remove the motor (11/6).

Remove gasket (11/1).

Remove coupling element (12/1).

Unscrew screw (12/2) and pull off the spring washer (12/3).

Pull off the coupling half (12/4).

Remove key (12/5).

Pull off the compression ring (12/6) and O-ring (12/7).

Unscrew the hex. socket screws (12/9) and pull out the centering disc (12/10).

If the centering disc does not come loose, use the forcing thread into which screws (12/9) can be screwed in.

Remove the O-ring (12/11).

Force the shaft seal (12/8) out of the centering disk.

Pull off the bushing (12/12) from the shaft.

We recommend the use of a new shaft seal and bushing for reassembly.

Before fitting the new shaft seal, moisten it slightly with a little vacuum pump oil.

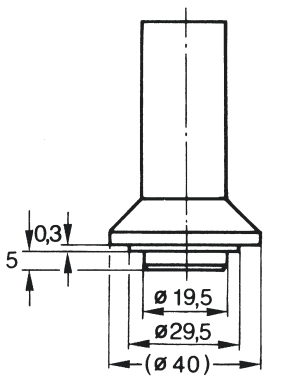

bottom: centering disk with shaft sealing ring

Fig. 13 Shaft sealing ring driver

Using a suitable plastic or aluminium cylinder (shaft seal driver) and a plastic hammer, force the shaft seal (12/8) carefully and without bending it into the centering disk (for position of shaft seal, see Fig. 12).

The shaft seal must not be bent.

Push the bushing (12/12) on to the shaft.

Insert the O-ring (12/11) into its groove.

Carefully push the centering disk (12/10) with the shaft seal onto the shaft and up against the end plate; fasten it with the screws (12/9).

Push the O-ring (12/7) and the compression disk (12/6) on to the shaft.

Insert the key (12/5).

Check the coupling, replace if required. To check the coupling note the information provided in Section 5.7.1.

Mount the pump-half of the coupling (12/4) on the shaft.

Install the spring washer (12/3) and tighten the screw (12/2).

Insert the coupling element (12/1) into the coupling and mount the motor (see Section 3.5).

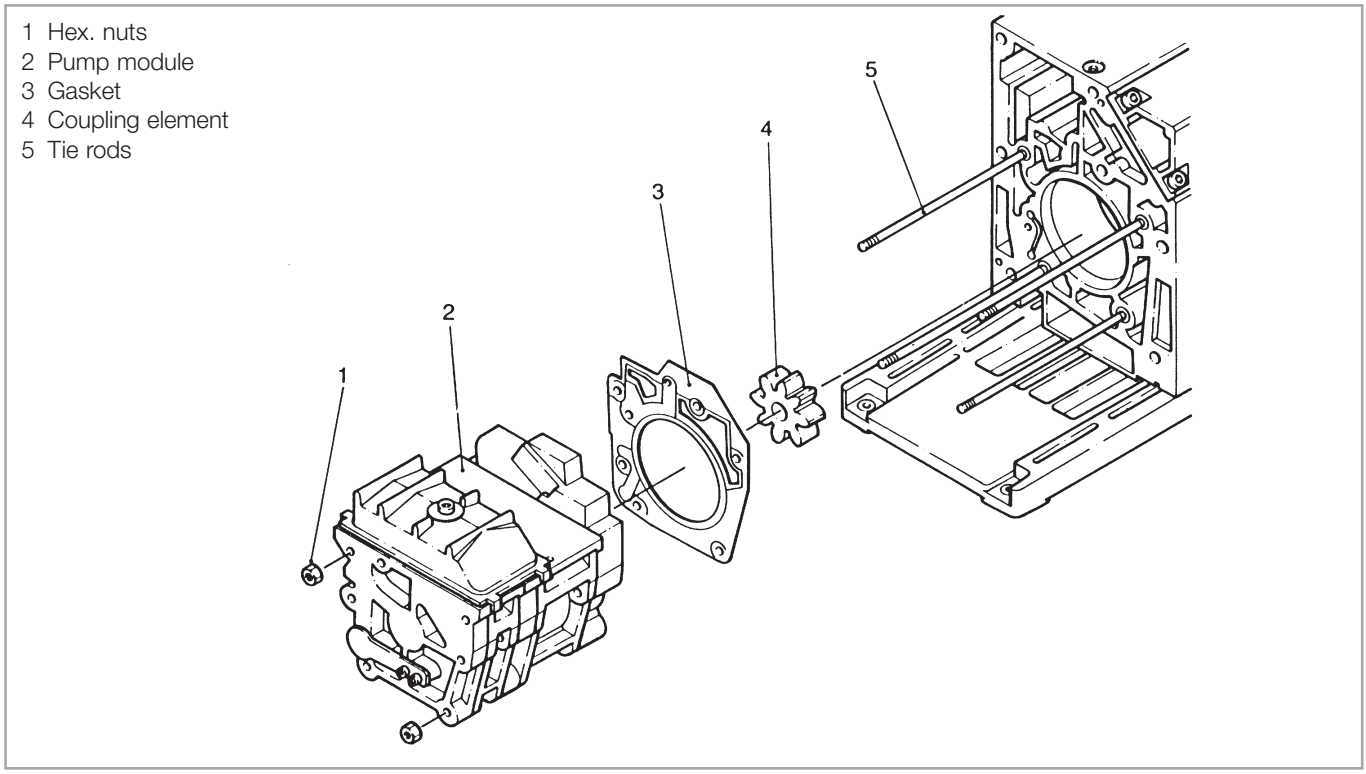

Fig. 14 Removing and remounting the pump module

5.9 Removing and Remounting the Pump Module

Required tools:

Allen keys size 3, 4, 6 and 8 mm, box wrench size 13, possibly pliers, torque wrench.

Required spare parts:

Gasket (14/3)	For material No., see spare parts list

5.9.1 Removing the Pump Module

Drain the oil and remove the oil case (see Section 5.6).

Unscrew the hex. nuts (14/1).

Pull the entire pump module (14/2) forward off the tie rods (14/5).

When doing so, ensure that the individual pin-fitted parts are not loosened. Further disassembly of the pump module should only be carried out by a trained service engineer.

NOTICE



Remove the gasket (14/3).

Remove the coupling element (14/4).

After removing the protective shipping materials, handle the new pump module with care.

Before installing a new pump module, remove the four tie rods from the new module and insert them in the old one for protection during shipment.

5.9.2 Remounting the Pump Module

When installing a new pump module, it is also advisable to use a new gasket (14/3).

Check the coupling element (14/4) for damage; if necessary, install a new one.

Use the tie rods supplied with the new pump module only if the old ones are damaged. To do so, unscrew the old tie rods with lock nuts, and screw in the new ones. With the aid of the lock nuts, tighten the tie rods. Then remove the lock nuts.

Push the gasket (14/3) onto the tie rods (14/5), push the coupling element (14/4) onto one coupling half.

Push the entire pump module (new or repaired) onto the tie rods.

NOTICE



Screw on the hex. nuts (14/1) and carefully cross-tighten them (torque 8 Nm).

Mount the oil case together with the gasket (see Section 5.6).

Fill in oil.

6 Troubleshooting

Fault	Possible cause	Remedy	Repair*
Pump does not start.	Wiring is malfunctioning.	Check and repair wiring.	-
	Motor protection switch incorrectly set (three-phase motors only).	Set motor protection switch properly.	3.4
	Operating voltage does not match motor.	Replace the motor.	5.7
	Motor is malfunctioning.	Replace the motor.	5.7
	Oil temperature is below 12 °C.	Heat the pump and pump oil or use a different oil.	4.3.3/5.4
	Oil is too thick.	Change the oil.	5.4
	Exhaust filter/exhaust line is clogged.	Replace the filter or clean the exhaust line.	-
	Pump is seized up (sign: pump is jammed).	Repair the pump.	Service
Pump does not reach ultimate pressure.	Measuring technique or gauge is unsuitable.	Use correct measuring technique and gauge. Measure the pressure directly at the pump's intake port.	-
	External leak[1)].	Repair the pump.	Service
	Anti-suckback valve is malfunctioning.	Repair the valve.	Service
	Exhaust valve is malfunctioning.	Repair the valve.	Service
	Oil is unsuitable.	Change the oil (degas it, if necessary).	5.4
	Vacuum lines are dirty.	Clean the vacuum lines.	-
	Pump is too small.	Check the process data, replace the pump, if necessary.	-
Pumping speed is too low.	Inlet screen in the intake port is clogged.	Clean the inlet screen. Precaution: install a dust filter in the intake line.	5.5
	Exhaust filter is clogged.	Install new filter element.	-
	Connecting lines are too narrow or too long.	Use adequately wide and short connecting lines.	3.3
After switching off the pump under vacuum, pressure in the system rises too fast.	System has a leak.	Check the system.	-
	Anti-suckback valve is malfunctioning	Repair the valve.	Service

* Repair: Refer to the stated section in these Operating Instructions.
[1)] Bubble test: The warm pump with degassed oil is running without gas ballast and the intake is blanked off. The exhaust line is led into a vessel with water.
If an evenly spaced line of bubbles appears then the pump has an external leak.

Troubleshooting

Fault	Possible cause	Remedy	Repair*
Pump gets hotter than usually observed.	Cooling air supply is obstructed.	Set pump up correctly.	3.1
	Ambient temperature is too high.	Set pump up correctly.	3.1/4.3.3
	Process gas is too hot.	Change the process.	-
	Oil level is too low.	Add oil.	5.3
	Oil is unsuitable.	Change the oil.	5.4
	Oil cycle is obstructed.	Clean or repair the oil lines and channels.	Service
	Exhaust filter/exhaust line is obstructed.	Replace the exhaust filter, clean the exhaust line.	-
	Exhaust valve is malfunctioning.	Repair the valve.	Service
	Pump module is worn out	Replace the pump module	5.9
Oil in the intake line or in the vacuum vessel.	Oil comes from the vacuum system.	Check the vacuum system.	-
	Anti-suckback valve is blocked.	Clean or repair the anti-suckback valve.	Service
	Sealing surfaces of the anti-suckback valve are damaged or dirty.	Clean or repair intake and anti-suckback valve	Service
	Oil level is too high.	Drain out excess oil.	5.3
Oil is turbid.	Condensation.	Degas the oil or change the oil and clean the pump. Precaution: open the gas ballast valve or fit separator	4.3.2/5.4
Pump is excessively noisy.	Oil level is much too low (oil level is no longer visible).	Add oil.	5.3/5.4
	Silencing nozzle is clogged.	Clean the silencing nozzle or replace it.	Service
	Intake pressure is too high.	Lower the intake pressure.	-
	Internal demister is clogged.	Clean or replace demister.	Service
	Coupling element is worn.	Install new coupling element	-
	Vanes or bearings are damaged.	Repair pump.	Service

7 Wearing Parts and Original Spare Parts

The spare parts for your vacuum pump are listed in the spare parts list enclosed with the product.

8 Waste Disposal

The equipment may have been contaminated by the process or by environmental influences. In this case the equipment must be decontaminated in accordance with the relevant regulations. We offer this service at fixed prices. Further details are available on request.

Risk of injury and environmental damage

Contaminated parts can be detrimental to health and environment. Before beginning with any work, first find out whether any parts are contaminated.

Adhere to the relevant regulations and take the necessary precautions when handling contaminated parts; For example wear gloves, face protection or breathing protection.

WARNING



Separate clean components according to their materials, and dispose of these accordingly. We offer this service. Further details are available on request.

When sending us any equipment, observe the regulations given in Section “5.2 Leybold Service”.

Disposal of Waste Oil

Owners of waste oil are entirely self-responsible for proper disposal of this waste.

Waste oil from vacuum pumps must not be mixed with other substances or materials.

Waste oil from vacuum pumps (Leybold oils which are based on mineral oils) which are subject to normal wear and which are contaminated due to the influence of oxygen in the air, high temperatures or mechanical wear must be disposed of through the locally available waste oil disposal system.

Waste oil from vacuum pumps which is contaminated with other substances must be marked and stored in such a way that the type of contamination is apparent. This waste must be disposed of as special waste.

European, national and regional regulations concerning waste disposal need to be observed. Waste must only be transported and disposed of by an approved waste disposal vendor.

EU Declaration of Conformity

The manufacturer: Leybold GmbH, Bonner Strasse 498, D-50968 Köln, Germany

herewith declares that the products specified and listed below which we have placed on the market, comply with the applicable EU Directives. This declaration becomes invalid if modifications are made to the product without agreement of Leybold GmbH.

Product designation:	Rotary vane pump	Rotary vane pump
Type designation:	TRIVAC D16B; TRIVAC D25B	TRIVAC D16B; TRIVAC D25B
Part numbers:	**11265; 11266; 11275; 11276 11325; 11335; 11266J; 11276J**	**140160; 140160V; 140170**
Marking:	Ⓔx II 3/-G Ex h IIC T4 (50 Hz) Gc II 3/-G Ex h IIC T3 (60 Hz) Gc 12°C≤Ta≤40°C	Ⓔx II 3/3G Ex h IIC T4 (50 Hz) / Ex h IIC T3 (50Hz) Gc 12°C≤Ta≤40°C

The products comply with the following Directives:

Machinery Directive (2006/42/EC)

The safety objectives of the Low Voltage Directive 2014/35/EU were complied with in accordance with Appendix 1 No. 1.5.1 of Machinery Directive 2006/42/EC.

Electromagnetic Compatibility (2014/30/EU)

ATEX equipment directive (2014/34/EU)

Directive RoHS (2011/65/EU) & (2015/863)

The following harmonized standards have been applied:

EN 1012-2:1996+A1:2009	Compressors and vacuum pumps - Safety requirements Part 2: Vacuum pumps
EN 60204-1:2006	Safety of machinery - Electrical equipment of machines Part1: General requirements
EN 61000-6-2:2019	Electromagnetic compatibility (EMC) - Part 6-2: Generic standards - Immunity for industrial environments
EN 61000-6-4:2007/A1:2011	Electromagnetic compatibility (EMC) - Part 6-4: Generic standards - Emission standard for industrial environments
EN ISO 80079-36:2016	Explosive atmospheres - Part 36: Non-electrical equipment for explosive atmospheres Basic method and requirements
EN ISO 80079-37:2016	Explosive atmospheres - Part 37: Non-electrical equipment for explosive atmospheres Non-electrical type of protection constructional safety "c"
EN IEC 63000:2018	Technical documentation for the assessment of electrical and electronic products with respect to the restriction of hazardous
Documentation officer:	Leybold GmbH, Bonner Straße 498, D-50968 Köln T: +49(0)221 347 0 F: +49(0)221 347 1250 documentation@leybold.com

Cologne, November 03th, 2020

Andries De Bock
VP Engineering
Industrial Vacuum Division

Cologne, November 03th, 2020

Nina Buta
General Manager
Product Company Lutin

Dokument Nr.: 300303825 002 A5

EU Declaration of Conformity

The manufacturer: Leybold GmbH
Bonner Strasse 498
D-50968 Köln, Germany

herewith declares that the products specified and listed below which we have placed on the market, comply with the applicable EU Directives. This declaration becomes invalid if modifications are made to the product without agreement of Leybold GmbH.

Product designation:	Rotary vane pump
Type designation:	TRIVAC D16B; TRIVAC D25B
Catalogue No.:	**11333; 11333J; 11406; 11410; 91463-1; 140165; 1127618; 1127618J; 91275-2**

The products comply with the following Directives:

Machinery Directive (2006/42/EC)

The safety objectives of the Low Voltage Directive 2014/35/EU were complied with in accordance with Appendix 1 No. 1.5.1 of Machinery Directive 2006/42/EC.

Electromagnetic Compatibility (2014/30/EU)

Directive RoHS (2011/65/EU) & (2015/863)

The following harmonized standards have been applied:

EN 1012-2:1996+A1:2009	Compressors and vacuum pumps — Safety requirements Part 2: Vacuum pumps
EN 60204-1:2006	Safety of machinery — Electrical equipment of machines Part 1: General requirements
EN 61000-6-2:2019	Electromagnetic compatibility (EMC) - Part 6-2: Generic standards - Immunity for industrial environments
EN 61000-6-4:2007/A1:2011	Electromagnetic compatibility (EMC) - Part 6-4: Generic standards - Emission standard for industrial environments
EN IEC 63000:2018	Technical documentation for the assessment of electrical and electronic products with respect to the restriction of hazardous substances

Documentation officer: Leybold GmbH, Bonner Straße 498, D-50968 Köln
T: +49(0)221 347 0
F: +49(0)221 347 1250
documentation@leybold.com

Cologne, November 03th, 2020

Andries De Bock
VP Engineering
Industrial Vacuum Division

Cologne, November 03th, 2020

Nina Buta
General Manager
Product Company Lutin

Document-No.: 300303819_002_A6

EU- Incorporation Declaration

The manufacturer: Leybold GmbH
Bonner Straße 498, D-50968 Köln

herewith declares that the following product:

Product designation:	Rotary vane pump **without motor**
Type designation:	TRIVAC D4B; TRIVAC D8B; TRIVAC D16B; TRIVAC D25B;
	TRIVAC D40B; TRIVAC D65B
Catalogue No.:	**11307; 11317; 11328; 11338; 11346; 11356**

complies with the following fundamental requirements of the **Machinery Directive (2006/42/EC)**:
Annex I, Paragraph 1.1.2, 1.1.3, 1.1.5, 1.2.1, 1.2.3, 1.2.4.1, 1.2.4.2, 1.2.6, 1.3.1, 1.3.2, 1.3.3, 1.3.4, 1.3.7, 1.5.1, 1.5.2, 1.5.4, 1.5.5, 1.5.13, 1.6.1 and 1.7.1

The following harmonized standards have been applied:

EN 1012-2:1996+A1:2009	Compressors and vacuum pumps — Safety requirements Part 2: Vacuum pumps

The incomplete machine may only be put into operation after it has been determined that the machine into which the incomplete machine shall be installed complies with the regulations laid down in the EC Machinery Directive (2006/42/EG).

The manufacturer commits himself to make the special documentation on the incomplete machine electronically available to national authorities upon request.

The special engineering documentation belonging to the machine was compiled in accordance with Annex VII Part B.

So far as practicable this product also complies with

Directive RoHS (2011/65/EU) & (2015/863)

EN IEC 63000:2018	Technical documentation for the assessment of electrical and electronic products with respect to the restriction of hazardous

Documentation officer: Leybold GmbH, Bonner Straße 498, D-50968 Köln
T: +49(0)221 347 0
F: +49(0)221 347 1250
documentation@leybold.com

Cologne, November 03th, 2020

Andries De Bock
VP Engineering
Industrial Vacuum Division

Cologne, November 03th, 2020

Nina Buta
General Manager
Product Company Lutin

Document-No.: 300303854_002_A4

Notes

Leybold

Pioneering products. Passionately applied.

Leybold GmbH
Bonner Strasse 498
50968 Cologne
GERMANY
T: +49-(0)221-347-0
info@leybold.com
www.leybold.com

LV_21503_2020 11.20