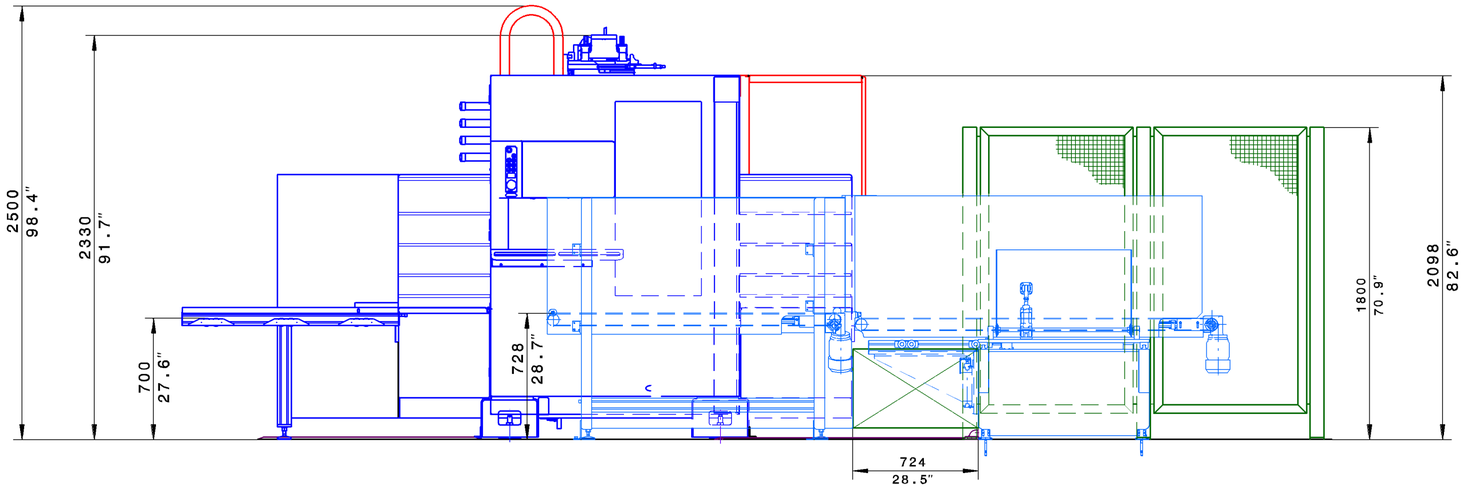

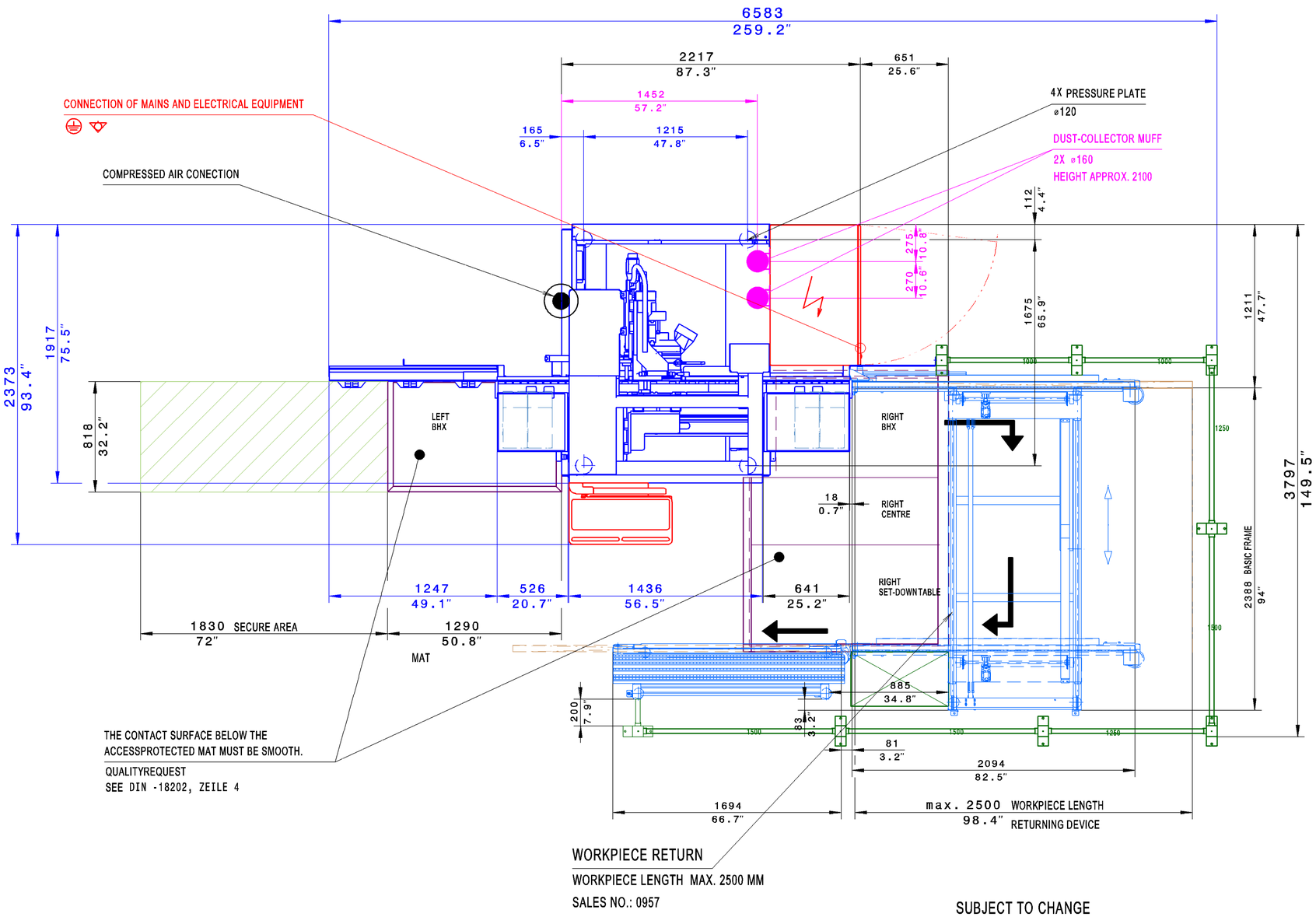

WORKPIECE SIZES	MANUAL REMOVAL	WORKPIECE WEIGHT MAX. 60 KG
LENGTH MIN./MAX.	200,0 MM / 3050,0 MM	
PASS HEIGHT MIN/MAX	50,0 MM / 1250,0 MM	
THICKNESS MIN./MAX.	8,0 MM / 80,0 MM	
WORKPIECE SIZES	RETURNING DEVICE AUTOMATIC	
LENGTH MIN./MAX.	350,0 MM / 2500,0 MM	
PASS HEIGHT MIN/MAX	60,0 MM / 1250,0 MM	
THICKNESS MIN./MAX.	8,0 MM / 80,0 MM	

PNEUMATIC	STANDARD COMPRESSED AIR QUALITY ACCORDING TO ISO 8573- 1 QUALITY CLASS WATER CONTENT CLASS 4 TOTAL OIL CONTENT CLASS 3 SOLID IMPURITIES CLASS 3 AIR PRESSURE IN SUPPLY LINE MIN. 7BAR (102 PSI)	
	COMPRESSED AIR CONECTION	R 1/2"
	COMPRESSED AIR CONSUMPTION	APPROX. 40-60 NL/MIN
DUST COLLECTION	ABSAUGANSCHLUSS :	D: 2x Ø160
	TOTAL DUST EXTRACTION CAPACITY	MIN. 4350 M3/H
	AIR VELOCITY	MIN.30 M/SEC
	NEGATIVE PRESSURE	APPROX. 2200 PA
ELECTRIC/ELECTRONIC	PROTECTION MODE	IP53
	OPERATING VOLTAGE	3* 400 VOLT
	CONTROL VOLTAGE	24 VOLT
	FREQUENCY	50/60 HZ
	NOMINAL CURRENT	28 A
	RECOMMENDED PREFUSE PROTECTION	35 A
	TOTAL CONNECTED LOAD	16 KW
	BUILDING OR FOUNDATION GROUND CONNECTION VIA RIBBON FABRIC GROUNDING STRIP. THIS EMC FUNCTIONAL GROUNDING IS REQUIRED FOR EMC-STANDARD COMPLIANCE. EMV- EARTHING RESISTANCE <5Ω THE MACHINES ARE NOT SUITABLE FOR CONNECTION TO AN RCD DUE TO OPERATIONAL LEAKAGE CURRENTS. INSTEAD, THE RECOMMENDATION IS TO ROUTE THE SUPPLY LINE IN SUCH A WAY AS TO PREVENT GROUND FAULTS OR SHORT CIRCUITS (E.G. IN ACCORDANCE WITH DIN VDE 0100-520/521.11) .	
FOUNDATION	WEIGHT OF MASCHINE APPROX 3500KG	
	THE CUSTOMER MUST DESIGN THE FOUNDATION HOMAG DOES NOT TAKE REPONSIBILITY FOR THIS.	
	THICKNESS OF CONCRETE MIN. 200 MM	
	CONCRETE QUALITY C25/30 XC1 CAPABLE OF BEARING PRESSURE AND TENSION	
	NEITHER HEIGHT DIFFRENCES NOR JOINTS ARE ALLOWED. EVENESS OF FLOOR: TOLERANCE = +/- 10MM	
	THE FOUNDATION HAS TO BE AT GROUND LEVEL	
	IN CASE THE MACHINE IS INSTALLED NEXT TO A VIBRATION GENERATOR (E.G.PRESS, HUGH FORK LIFT ETC.) THE MACHINE BED MUST BE SURROUNDED BY A STYROPOR EXTENSION JOINT. NO UNDERFLOOR HEATING MUST BE INSTALLED IN THE MACHINE BASE AREA	

FOR THE ROOM CONDITIONS DURING MACHINE OPERATION PLEASE SEE OUR SAFETY REGULATIONS

THIS DRAWING SERVES AS EXPLANATION FOR OUR QUOTATION.
IT IS NOT BINDING FOR THE FINAL EXECUTION.

DRILLTEQ V-500

O BHX200

WITHOUT OUR PERMISSION THIS DRAWING MUST NOT BE REPRODUCED NOR DUPLICATED NOR MADE ACCESSIBLE TO THIRD PARTIES OR COMPETITORS

AB	AEND.NR.	DATE	NAME

	DATE	NAME
BEARB.	27.06.2018	Berlinghof
KTRL.	27.06.2018	

ISO 2768 mK-E
EN ISO 13920 -BE
COLOR CODE TABLE

M 1:25

MATERIAL –
CAST MODEL
kg dm²

HOMAG

SETTING UP PLAN
DRILLTEQ V-500

PLAN NO.
5-020-95-1150

A2

060
(C) Copyright reserved

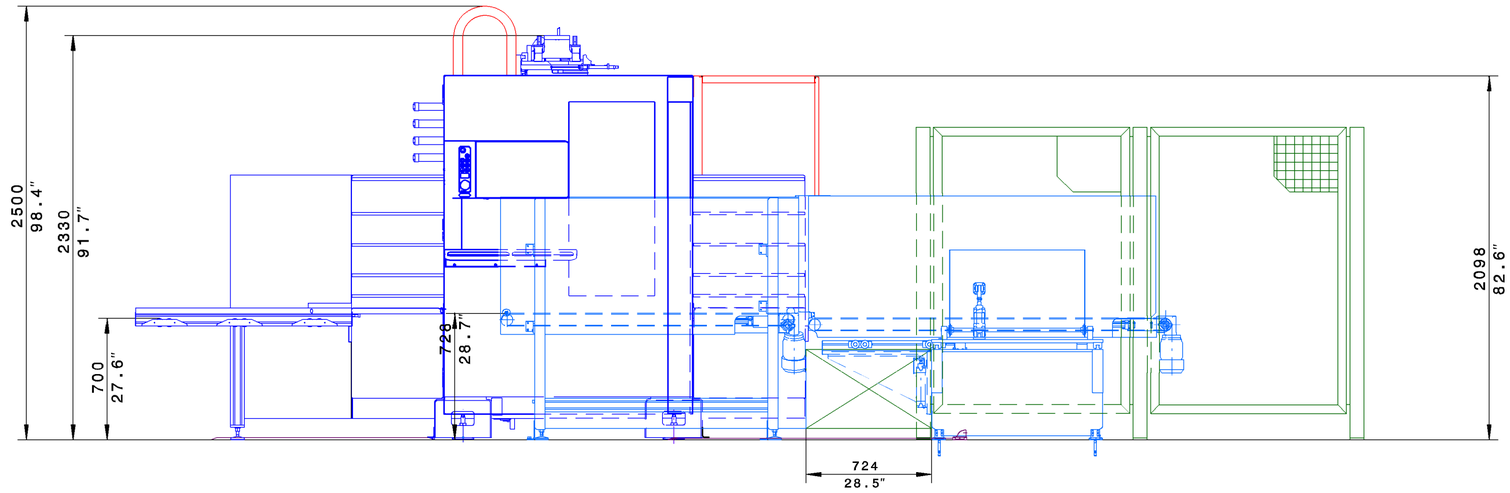

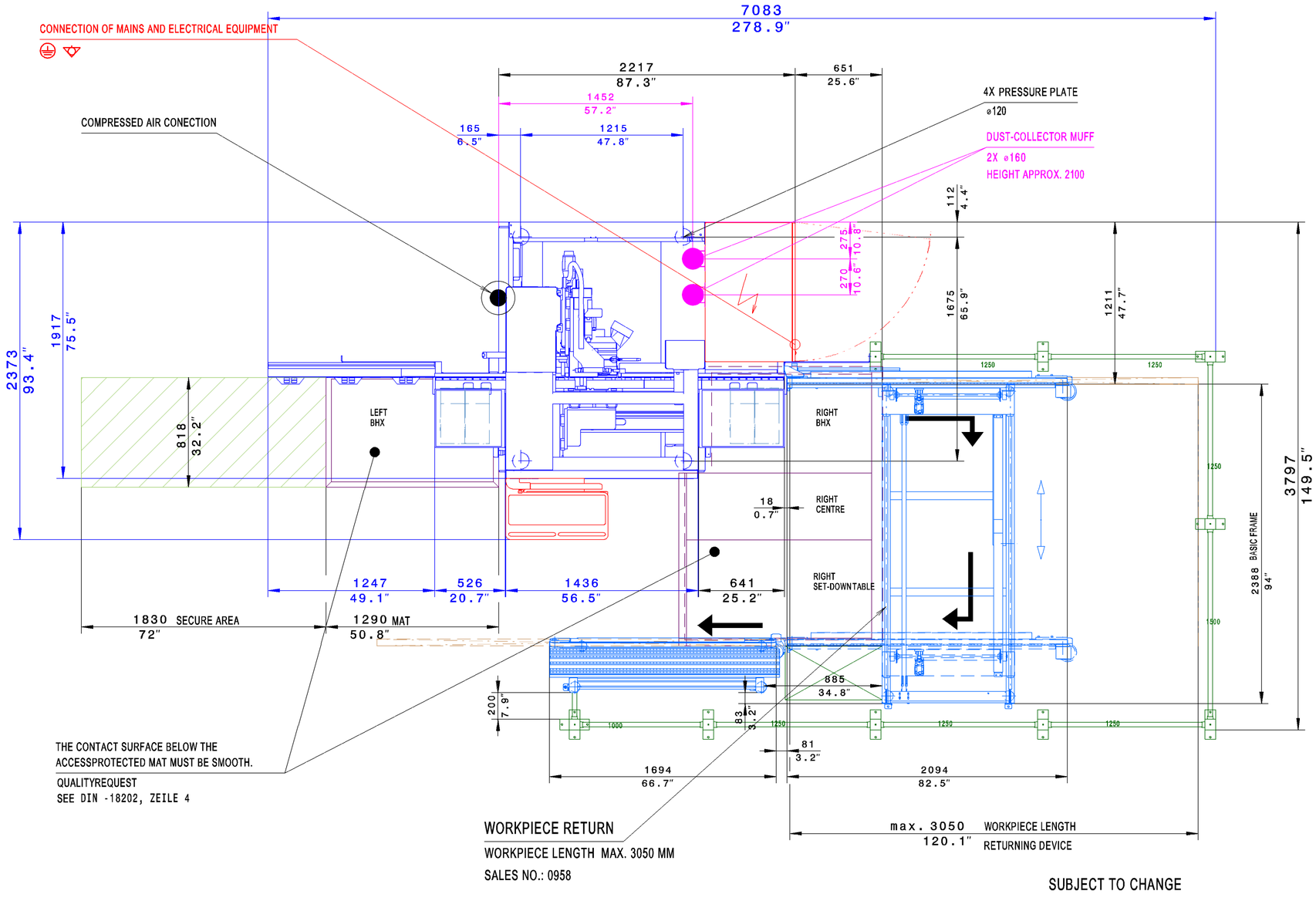

WORKPIECE SIZES	MANUAL REMOVAL	WORKPIECE WEIGHT MAX. 60 KG
LENGTH MIN./MAX.	200,0 MM / 3050,0 MM	
PASS HEIGHT MIN/MAX	50,0 MM / 1250,0 MM	
THICKNESS MIN./MAX.	8,0 MM / 80,0 MM	
WORKPIECE SIZES	RETURNING DEVICE AUTOMATIC	
LENGTH MIN./MAX.	350,0 MM / 3050,0 MM	
PASS HEIGHT MIN/MAX	60,0 MM / 1250,0 MM	
THICKNESS MIN./MAX.	8,0 MM / 80,0 MM	

PNEUMATIC	STANDARD COMPRESSED AIR QUALITY ACCORDING TO ISO 8573- 1 QUALITY CLASS WATER CONTENT CLASS 4 TOTAL OIL CONTENT CLASS 3 SOLID IMPURITIES CLASS 3 AIR PRESSURE IN SUPPLY LINE MIN. 7BAR (102 PSI)	
	COMPRESSED AIR CONECTION	R 1/2"
	COMPRESSED AIR CONSUMPTION	APPROX. 40-60 NL/MIN
DUST COLLECTION	ABSAUGANSCHLUSS :	D: 2x Ø160
	TOTAL DUST EXTRACTION CAPACITY	MIN. 4350 M3/H
	AIR VELOCITY	MIN.30 M/SEC
	NEGATIVE PRESSURE	APPROX. 2200 PA
ELECTRIC/ELECTRONIC	PROTECTION MODE	IP53
	OPERATING VOLTAGE	3* 400 VOLT
	CONTROL VOLTAGE	24 VOLT
	FREQUENCY	50/60 HZ
	NOMINAL CURRENT	28 A
	RECOMMENDED PREFUSE PROTECTION	35 A
	TOTAL CONNECTED LOAD	16 KW
	BUILDING OR FOUNDATION GROUND CONNECTION VIA RIBBON FABRIC GROUNDING STRIP. THIS EMC FUNCTIONAL GROUNDING IS REQUIRED FOR EMC-STANDARD COMPLIANCE. EMV- EARTHING RESISTANCE <5Ω THE MACHINES ARE NOT SUITABLE FOR CONNECTION TO AN RCD DUE TO OPERATIONAL LEAKAGE CURRENTS. INSTEAD, THE RECOMMENDATION IS TO ROUTE THE SUPPLY LINE IN SUCH A WAY AS TO PREVENT GROUND FAULTS OR SHORT CIRCUITS (E.G. IN ACCORDANCE WITH DIN VDE 0100-520/821.11) .	
FOUNDATION	WEIGHT OF MASCHINE APPROX 3500KG	
	THE CUSTOMER MUST DESIGN THE FOUNDATION HOMAG DOES NOT TAKE REPONSIBILITY FOR THIS.	
	THICKNESS OF CONCRETE MIN. 200 MM	
	CONCRETE QUALITY C25/30 XC1 CAPABLE OF BEARING PRESSURE AND TENSION	
	NEITHER HEIGHT DIFFRENCES NOR JOINTS ARE ALLOWED. EVENESS OF FLOOR: TOLERANCE = +/- 10MM	
	THE FOUNDATION HAS TO BE AT GROUND LEVEL	
	IN CASE THE MACHINE IS INSTALLED NEXT TO A VIBRATION GENERATOR (E.G.PRESS, HUGH FORK LIFT ETC.) THE MACHINE BED MUST BE SURROUNDED BY A STYROPOR EXTENSION JOINT. NO UNDERFLOOR HEATING MUST BE INSTALLED IN THE MACHINE BASE AREA	

FOR THE ROOM CONDITIONS DURING MACHINE OPERATION PLEASE SEE OUR SAFETY REGULATIONS

THIS DRAWING SERVES AS EXPLANATION FOR OUR QUOTATION.
IT IS NOT BINDING FOR THE FINAL EXECUTION.

DRILLTEQ V-500

O BHX200

WITHOUT OUR PERMISSION THIS DRAWING MUST NOT BE REPRODUCED NOR DUPLICATED NOR MADE ACCESSIBLE TO THIRD PARTIES OR COMPETITORS

AB	AEND.NR.	DATE	NAME

	DATE	NAME
BEARB.	30.01.2018	Fuchs, K.
KTRL.	28.02.2018	Knepper, M.

ISO 2768 mK-E
EN ISO 13920 -BE
COLOR CODE TABLE

M
1:1
MATERIAL --
CAST MODEL _
Ω kg dm²

HOMAG

SETTING UP PLAN
DRILLTEQ V-500

PLAN NO.
5-020-95-0553

A2

060
(C) Copyright reserved

GENERAL DATA

PROCESSING ACCURACY
: ± 0,2 MM
DRILLING DEPTH : ± 0,3 MM

PROCESSING ACCURACY OUTSIDE THE WORKPIECE SUPPORTING AREA CAN DEVIATE DEPENDING ON THE MATERIAL CHARACTERISTICS AND WORKPIECE DIMENSIONS.

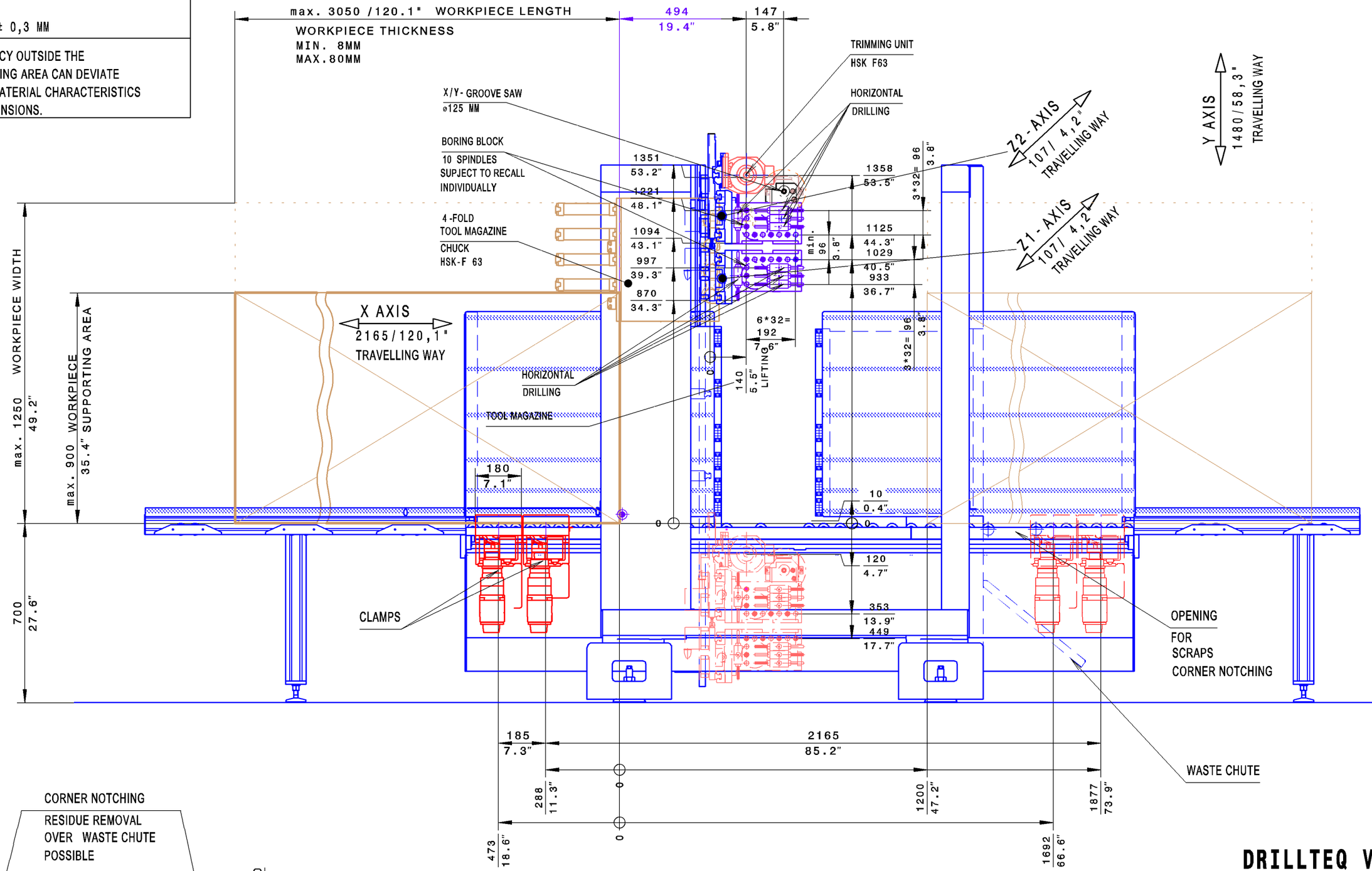

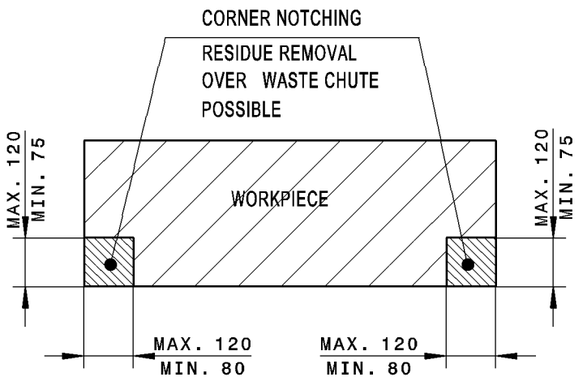

SUBJECT TO CHANGE

DRILLTEQ V-500
0 BHX 200
2x 10 SPINDLES

–A	TXT	28.08.18	Berlinghof
AB	AEND.NR.	DATE	NAME
		DATE	NAME
BEARB.		30.01.2018	Fuchs, K.
KTRL.		28.08.2018	

ISO 2768 mK-E
EN ISO 13920 -BE
COLOR CODE TABLE

M
1:15
MATERIAL -
CAST MODEL
kg dm²

MACHINE EQUIPMENT PLAN
DRILLTEQ V-500

HOMAG

PLAN NO.
9-817-14-2753

A3

060
(C) Copyright reserved

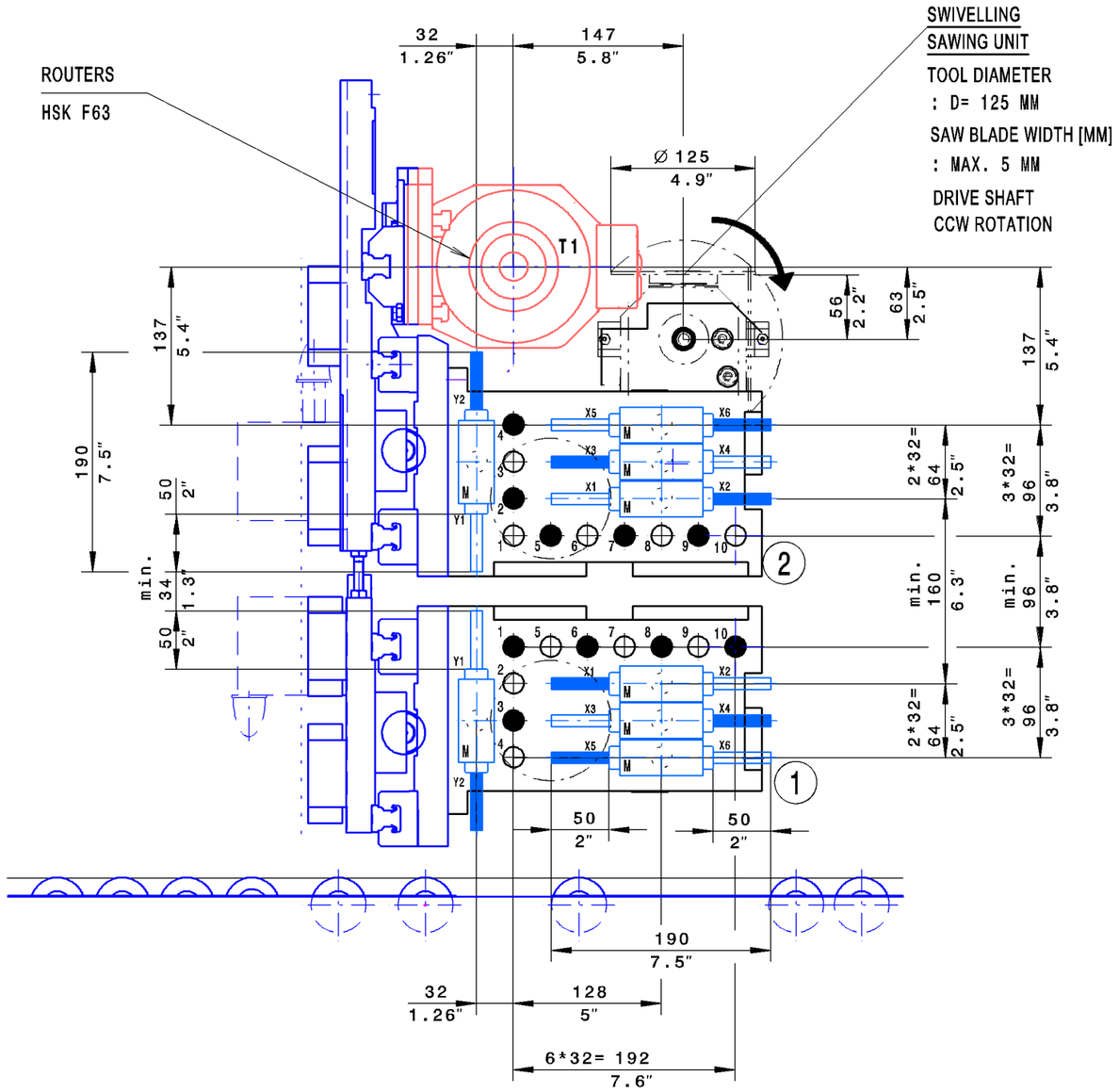

IN ORDER TO ACHIEVE THE MAXIMUM DRILLING DEPTH, THE LENGTH OF DRILL CENTERING BIT MUST NOT EXCEED 2 MM .

A LONGER DRILL CENTERING BIT REDUCES THE MAXIMUM DRILLING DEPTH.

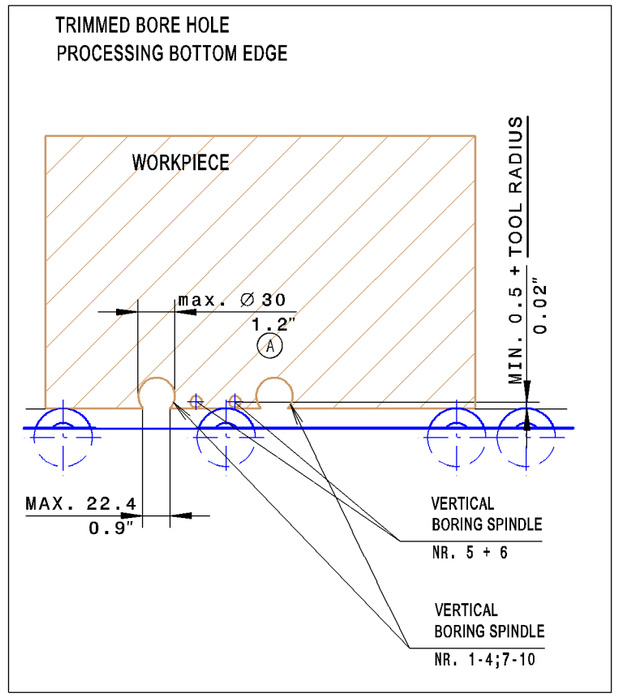

2

10 SPINDLE UNIT SUPJECT TO RECALL

VERTICAL BORING SPINDLE			INDIVIDUALLY			HORIZONTAL BORING SPINDLE		
1	T1201		7	T1207		X1	T1311	
2	T1202		8	T1208		X2	T1312	
3	T1203		9	T1209		X3	T1313	
4	T1204		10	T1210		X4	T1314	
5	T1205					X5	T1315	
6	T1206					X6	T1316	
						Y1	T1361	
						Y2	T1362	

SAW ø

T40	

TRIMMING UNIT

T 1	CHUCK HSK F63	

1

10 SPINDLE UNIT SUPJECT TO RECALL

VERTICAL BORING SPINDLE			INDIVIDUALLY			HORIZONTAL BORING SPINDLE		
1	T1001		7	T1007		X1	T1111	
2	T1002		8	T1008		X2	T1112	
3	T1003		9	T1009		X3	T1113	
4	T1004		10	T1010		X4	T1114	
5	T1005					X5	T1115	
6	T1006					X6	T1116	
						Y1	T1161	
						Y2	T1162	

DEVIATING PARAMETERS CAN ONLY BE APPROVED AFTER CONSULTATION WITH HOMAG!

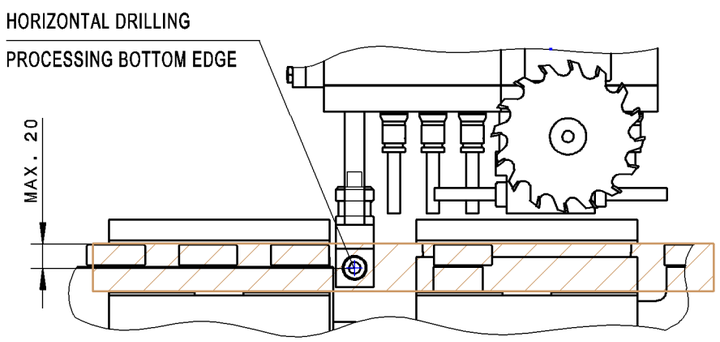

BORING SPINDLE CCW ROTATION

BORING SPINDLE CW ROTATION

DRILL HOLDER	= Ø 10 MM
DRILLS TOTAL LENGTH	70 MM
CHUCK 1,5,6,10 = DRILLS	MAX.Ø 35 MM
CHUCK 2-4,7-9 = DRILLS	MAX.Ø 30 MM
CHUCK HORIZ.= DRILLS	MAX.Ø 20 MM
MAXIMUM ROTATIONAL SPEED	7500 1/MIN

SUBJECT TO CHANGE

–A	-TxtAllgDa	28.08.18	Berlinghof
AB	AEND.NR.	DATE	NAME
	DATE	NAME	
BEARB.	30.01.2018	Fuchs, K.	
KTRL.	28.08.2018	Au.	

ISO 2768 mK-E
EN ISO 13920 -BE
COLOR CODE TABLE

M
1:5

MATERIAL --
CAST MODEL _
kg dm²

DRILLTEQ V-500
0 BHX 200
2x 10 SPINDLES

HOMAG

BORING BLOCK
DRILLTEQ V-500

PLAN NO.
9-817-14-2763

A3

060

(C) Copyright reserved

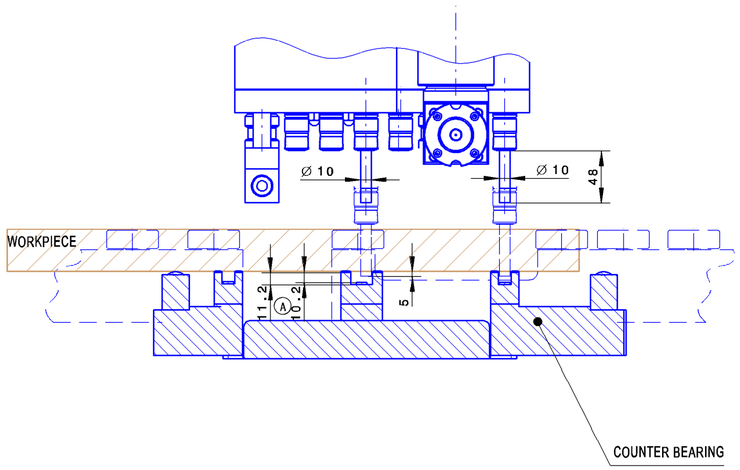

THROUGH HOLE DRILLING
WITH THROUGH-HOLE DRILL

THE QUALITY IS DEPENDENT ON THE SURFACE AND THE MATERIAL.

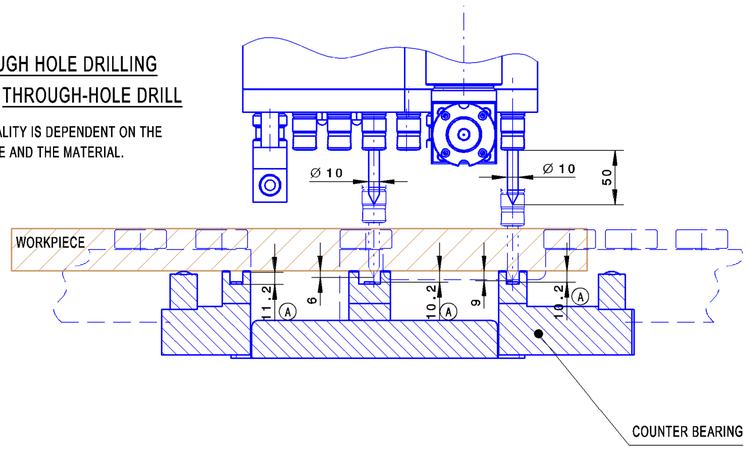

DEVIATING PARAMETERS CAN ONLY BE APPROVED AFTER CONSULTATION WITH HOMAG!

LIMITATION

FÜR THROUGH HOLE DRILLING

VERTICAL DRILLING

CHUCK 6,10
DRILL MAX. Ø 10 MM

BORING BLOCK 2X10 SPINDLES

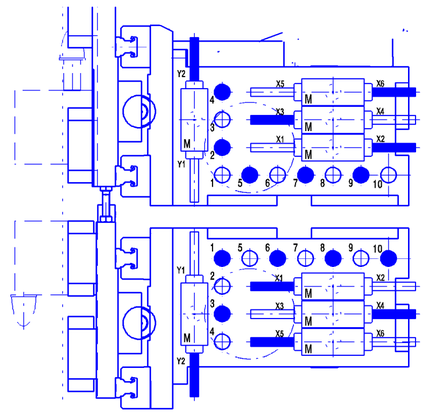

CHUCK 3,7
DRILL MAX. Ø 10 MM

BORING BLOCK 15 SPINDLES

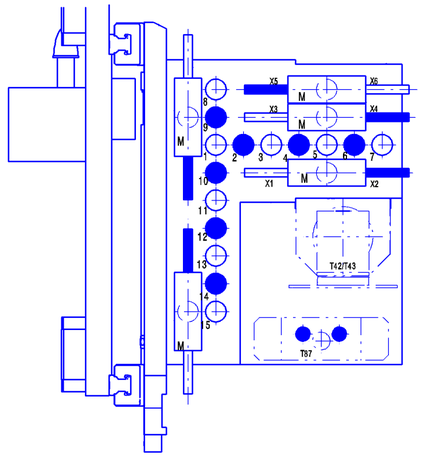

TEAR-FREE THROUGH-DRILLING
WITH DOWEL DRILLER WITH CENTERING TIPS

HIGH QUALITY

TOOL DIAMETER INDEPENDENT

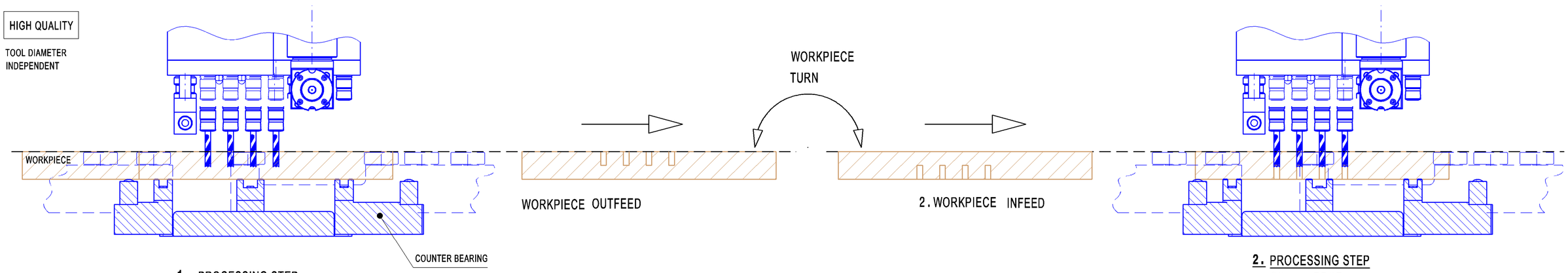

1. PROCESSING STEP
BLIND HOLE DRILLING

2. PROCESSING STEP
COUNTERBORE

BORING SPINDLE CCW ROTATION

BORING SPINDLE CW ROTATION

SUBJECT TO CHANGE

DRILLTEQ V-500
O BHX 200/...
VERTICALDRILLING

-A	0601900230	21.09.20	Isemhinke, J.
AB	AEND.NR.	DATE	NAME
	DATE	NAME	
PROC.	22.03.2018	Haden, A.	
CHCKD	21.09.2020	Knepper	

ISO 2768 MK-E
EN ISO 13920 -BE
COLOR CODE TABLE

M
1:5
MATERIAL –
CAST MODEL _
KG DM²

HOMAG

GENERAL OUTLINE
DRILLTEQ V-500

PLAN NO.
9-817-16-6481

A2

060
(C) Copyright reserved

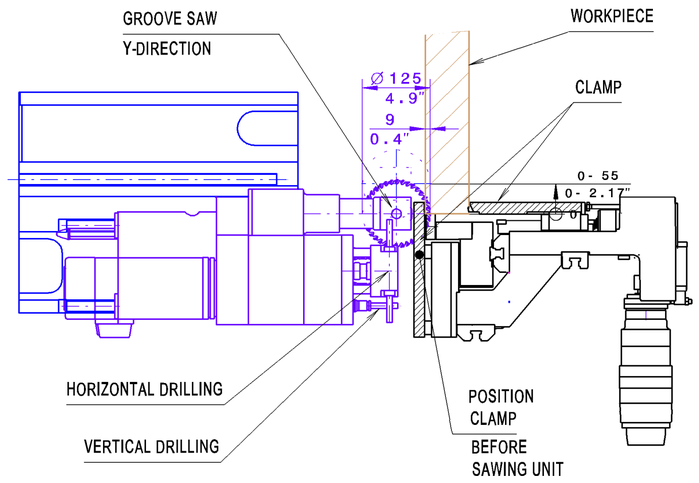

VIEW IN
FEED DIRECTION
Y-GROOVING

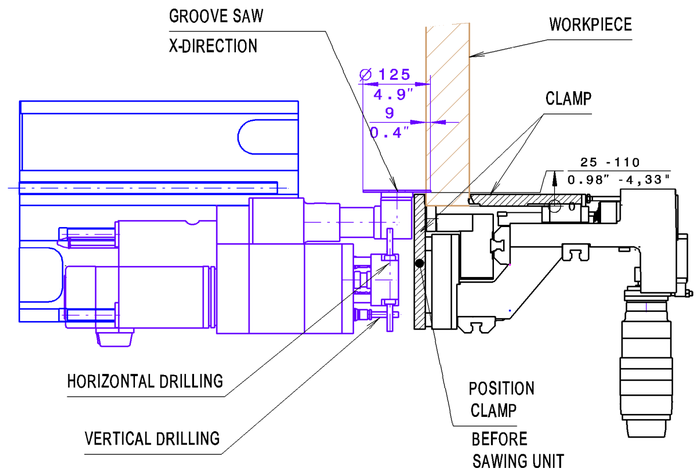

VIEW IN
FEED DIRECTION
X-GROOVING

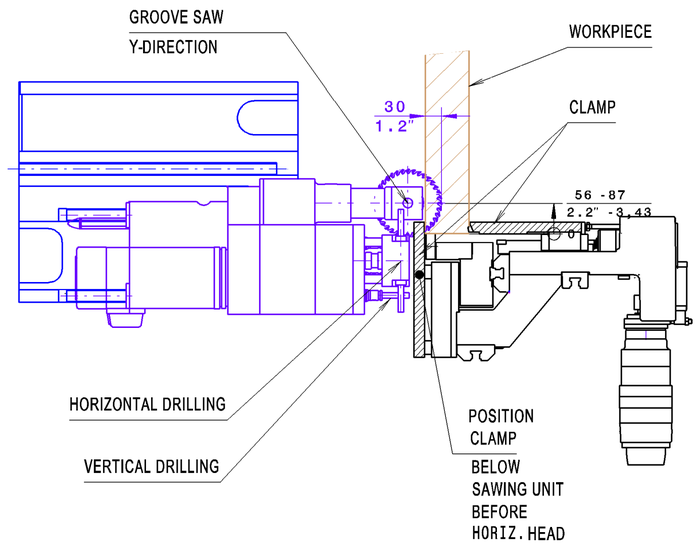

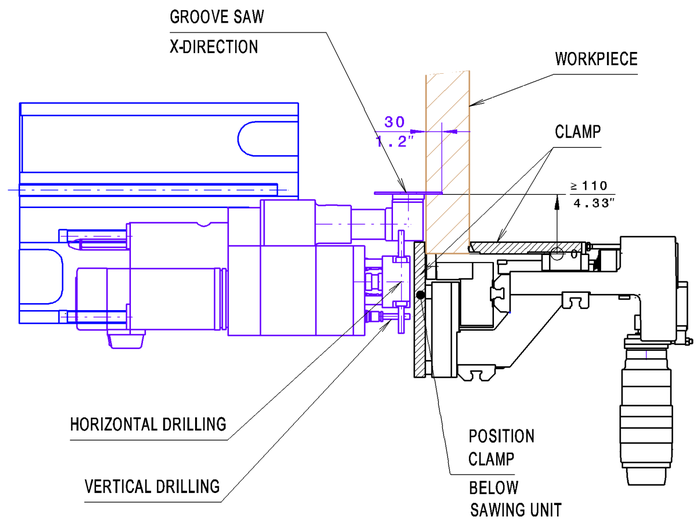

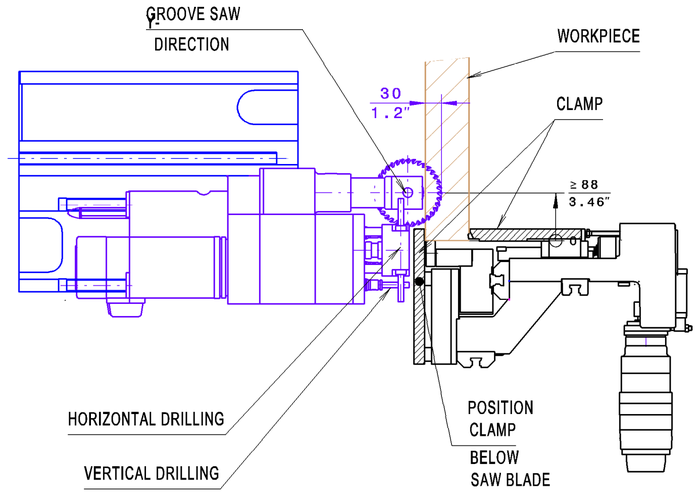

LIMITATIONS FOR GOOVING IN Y- DIRECTION		
DISTANCE MIDPOINT TO ZERO-LINE	DEPTH	NOTE
0-55 MM	9 MM	CLAMP STOPPED BEFORE SAWING UNIT
56-87 MM	30 MM	CLAMP STOPPED BELOW SAWING UNIT
≥ 88 MM	30 MM	NONE

LIMITATIONS FOR GOOVING IN X- DIRECTION		
DISTANCE TO ZERO-LINE	DEPTH	NOTE
0-25 MM	SAWING NOT POSSIBLE	CLAMP STOPPED IN RANGE OFF
25-110 MM	9 MM	CLAMP STOPPED BEFORE SAWING UNIT
≥ 110 MM	30 MM	NONE

NOTE: SEPARATING NOT POSSIBLE

SUBJECT TO CHANGE

DRILLTEQ V-500
0 BHX 200/ 0 BHX 200-D

AB	AEND.NR.	DATE	NAME
BEARB.		30.01.2018	Fuchs, K.
KTRL.		30.01.2018	ORTKRAS

ISO 2768 mK-E
EN ISO 13920 -BE
COLOR CODE TABLE

M
MATERIAL -
CAST MODEL
1:8 kg dm²

MACHINE EQUIPMENT PLAN
DRILLTEQ V-500

HOMAG

PLAN NO.
9-817-14-3471

A2

060
(C) Copyright reserved

BORING BLOCK

VERTICAL BORING BLOCK	HORIZONTAL BORING BLOCK	GROOVE SAW
DRILL HOLDER Ø10 DRILL LENGTH 70MM DEPLOYMENT 60MM	DRILL HOLDER Ø10 DRILL LENGTH 70MM DEPLOYMENT 60MM	SWIVELLING SAW BLADE Ø125 TOOL HOLDER Ø30 DEPLOYMENT 60MM
PROCESSING IN THE AREA WORKPIECE THICKNESS FROM 8 TO 80 MM	DRILL PROCESSING HORIZONTAL WORKPIECE THICKNESS FROM 8 TO 80 MM	PROCESSING ONLY IN THE AREA NOTE: SEPARATING NOT POSSIBLE

TRIMMING UNIT

CHUCK HSK-F 63	OPTIONAL: LAMELLO CLAMEX P
TOOL DIAMETER : D= 60 MM TOOL LENGTH (AUSSPANNLÄNGE) 100MM DEPLOYMENT 105MM	WZ-DURCHMESSER: D= 100.4 MM Ⓑ TOOL LENGTH: 127±4 MM DEPLOYMENT 105MM

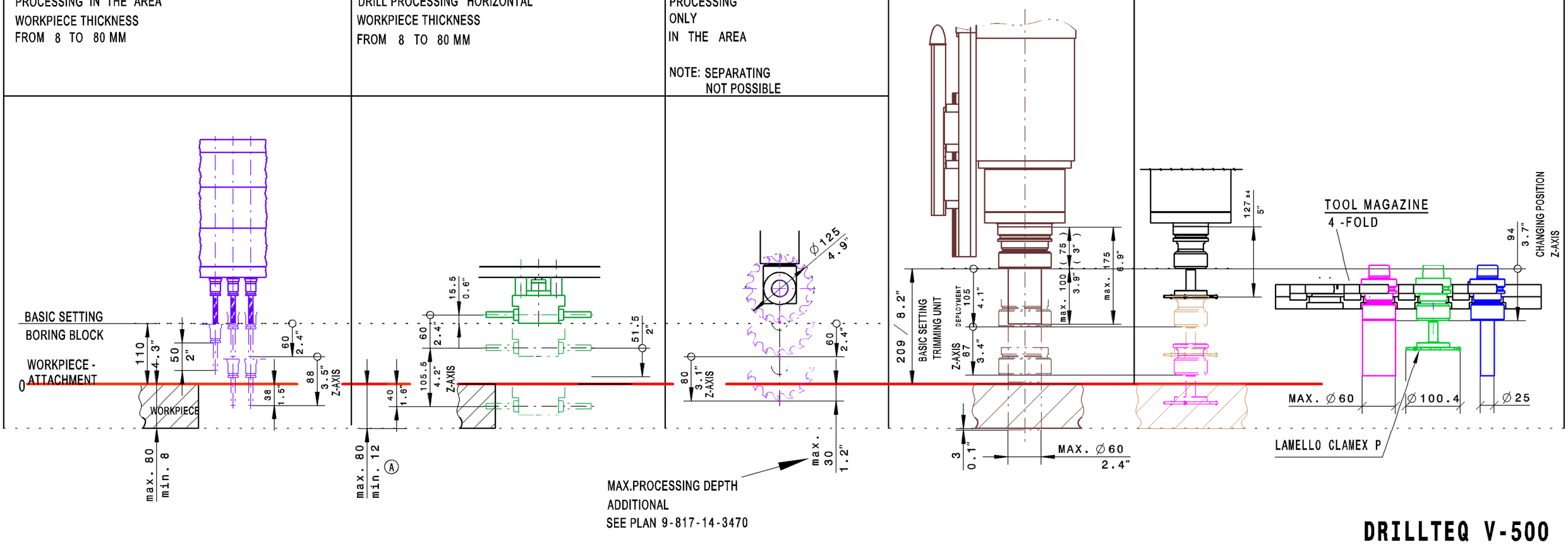

SUBJECT TO CHANGE

DRILLTEQ V-500

0 BHX 200

–B	Benenn.	26.09.18	Isemhinke, J.	M	MATERIAL -
–A	war min.8	19.04.18	Berlinghof	1:7	CAST MODEL
AB	AEND.NR.	DATE	NAME		⚖ kg ❒ dm²
		DATE	NAME		
BEARB.		30.01.2018	Fuchs, K.		
KTRL.		30.01.2018	KNE		

ISO 2768 mK-E
EN ISO 13920 -BE
COLOR CODE TABLE

GENERAL OUTLINE
DRILLTEQ V-500

HOMAG

PLAN NO.
9-817-14-2841

A3

060

(C) Copyright reserved

SUBJECT TO CHANGE

MINIMUM DISTANCE TO ZERO LINE
Y-PROCESSING

DOWEL DRIVING

ONLY MACHINE TYPE
BHX 200/D

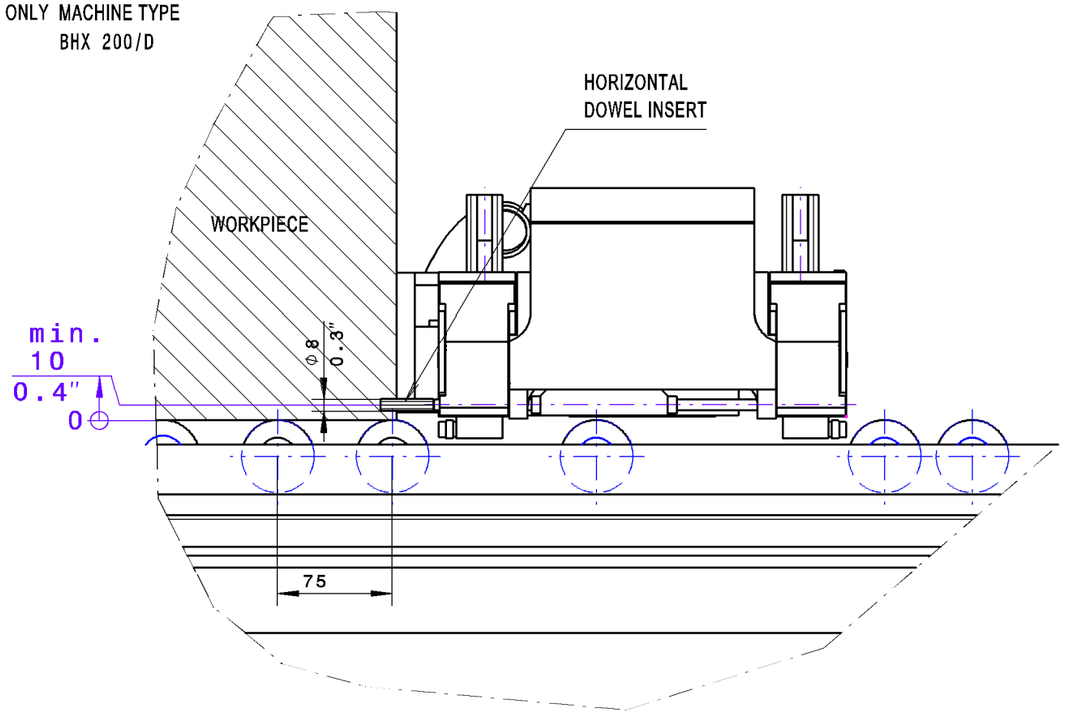

HORIZONTAL DRILLING

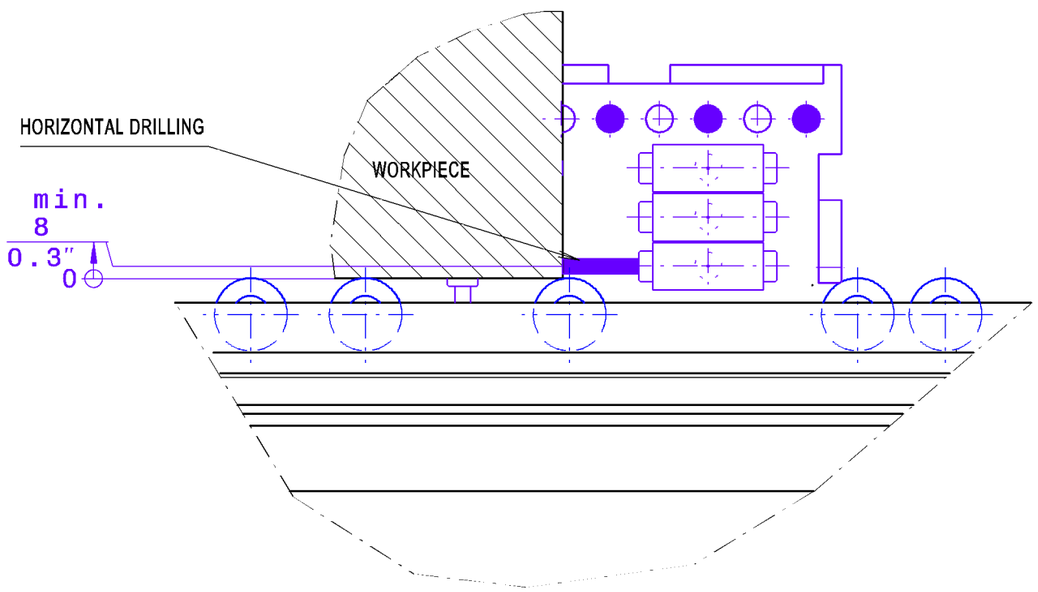

TRIMMING

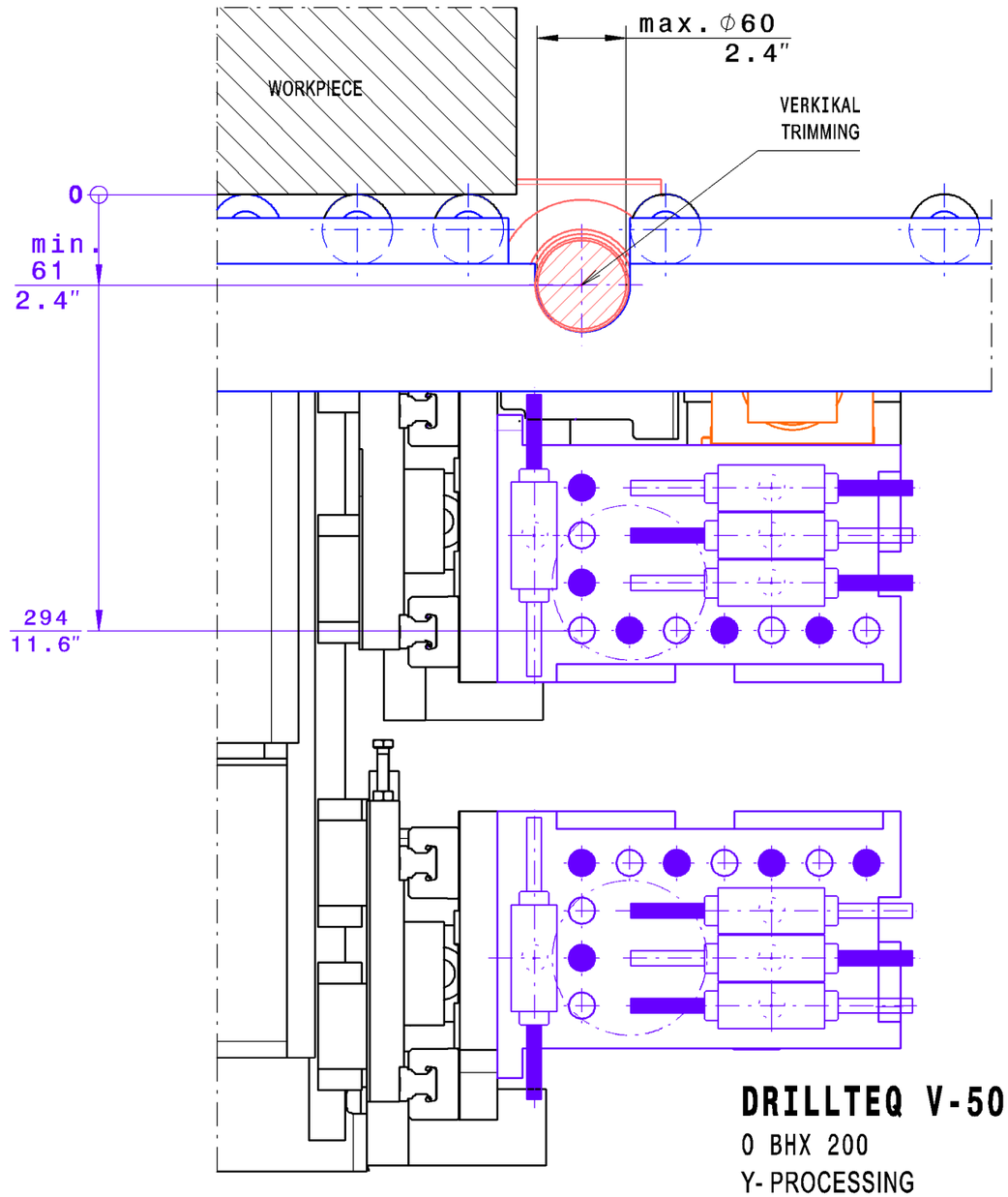

DRILLTEQ V-500
0 BHX 200
Y- PROCESSING

AB	AEND.NR.	DATE	NAME	M	MATERIAL -	HOMAG
				1:4	CAST MODEL	
					⚖ kg ❒ dm²	
	DATE	NAME		GENERAL OUTLINE		PLAN NO.
BEARB.	30.01.2018	Fuchs, K.		DRILLTEQ V-500		9-817-14-6042
KTRL.	30.01.2018	ORTKRAS				
ISO 2768 mK-E EN ISO 13920 -BE COLOR CODE TABLE						A3

060
(C) Copyright reserved