Operating Manual BA 1223/26 E

(Original operating instructions)

Hammer Mill

40/32 Ha

Standard design

Manufacturer's address

HOSOKAWA ALPINE Aktiengesellschaft

Peter-Dörfler-Str. 13–25
D-86199 Augsburg, Germany

Tel.: +49 8 21 59 06-0
Fax: +49 8 21 59 06-457

Keep in a safe place for future reference! 09.02 / BO

Table of Contents Page

1 General Information 5

1.1 Operating manual 5
1.2 Personnel 5
1.3 Order-specific application 6
1.4 Order-specific data sheet 7
1.5 Principle of operation 8
1.6 Mill features 8
1.7 Mill design 10
1.8 Safety interlock (order-specific) 11
1.8.1 Mechanical interlock with lock 11
1.8.2 Interlock without standstill monitor 11
1.8.3 Interlock with standstill monitor 11

2 Safety 12

2.1 Safety notices 12
2.2 Directives 12
2.3 Safety equipment 13
2.4 Safety regulations 15
2.5 Noise 17
2.6 Workplace 17

3 Technical Specifications 18

3.1 Main dimensions and connections 18
3.2 Machine specifications 19
3.3 Drive 19
3.4 Weights 20
3.5 Tools 20

4 Preliminary Procedures 21

4.1 Transport / machine storage 21
4.1.1 Transport 21
4.1.2 Machine storage 23
4.2 Installation 23
4.3 Drive 23
4.4 Speed 23
4.5 Direction of rotation 24

189631 273511
189650* 273479

Table of Contents Page

4.6 Electrical connection ... 24

5 Operation ... 25

5.1 Opening and closing the machine (mech. interlock) ... 25
5.1.1 Opening the machine ... 25
5.1.2 Closing the machine ... 26
5.2 Opening and closing the machine (magnetic or pneumatic interlock) ... 27
5.2.1 Opening the machine ... 27
5.2.2 Closing the machine ... 28
5.3 Preliminary procedures ... 28
5.4 Start-up ... 29
5.5 Operation – product feed ... 29
5.6 Overload ... 30
5.7 End-product discharge ... 31
5.7.1 End-product discharge into a discharge housing ... 31
5.7.2 Pneumatic end-product discharge ... 31
5.8 Shut-down ... 32

6 Maintenance ... 33

6.1 Lubrication ... 33
6.1.1 Mill bearing ... 33
6.1.2 Points to be lubricated occasionally ... 34
6.1.3 Motor ... 34
6.2 Cleaning ... 34
6.2.1 Dry cleaning ... 34
6.2.2 Wet cleaning ... 35
6.3 Wear control ... 35
6.4 Spare parts ... 37

7 Servicing ... 39

7.1 Exchanging the impact plate (A5) and the slide plate (A6) ... 40
7.1.1 Slide plate (A6) ... 41
7.1.2 Impact plate (A5) ... 41
7.2 Exchanging the screen (B1) ... 42
7.2.1 Wire mesh screen ... 43

189631 273511
189650* 273479

Table of Contents Page

7.3 Exchanging the bar grate (C) 44
7.4 Exchanging the beaters and beater shafts 46
7.5 Exchanging the beater unit, bearing exchange 48
7.6 Dismantling the removed beater unit 51
7.6.1 Flat steel beater unit (E) 51
7.6.2 Band steel beater unit (F) 53
7.6.3 Hammer beam beater unit (F) 55
7.6.4 Rigid beater unit (H) 57
7.7 Exchanging the wear plates (A4) 59

The following form part of this operating manual:

Spare parts drawing	EZ 1223-26	
Spare parts list	EL 1223-26 ...	order-specific
Technical instructions "Narrow-gauge V-belts"	TA 001/1	
Operating instructions for the magnetic interlock MVS1	BA 1694/7	order-specific
Separate manufacturer's instructions and documentation for the motor, interlock, etc.		order-specific

189631 273511
189650* 273479

1 General Information

1.1 Operating manual

This operating manual contains important information on how to operate the machine in a safe, proper and effective manner. Making yourself conversant with the operating manual will help to avoid safety hazards, reduce repair costs and downtime, and increase the reliability and service life of the machine.

The supplied operating instructions for the auxiliary components must also be observed.

The operating manual must always be available at the site of operations. It must be both complete and fully legible.

The operating manual must be read and applied by every single person charged with working on or at the machine.

These procedures include, for example:
- Operation, including machine set-up, fault elimination during operation, disposal of production waste, disposal of process materials,
- maintenance, servicing and/or
- machine transport.

1.2 Personnel

Only use qualified or trained personnel. Clear-cut responsibility must be delegated for machine operation, machine set-up, maintenance and servicing. All personnel must be conversant with the prevailing standards, directives and accident prevention regulations, with the principle of operation and operating conditions of the machine, and must furthermore be able to recognise and avoid safety hazards.

Work to the electrical equipment:
- only by qualified electricians,
- only when the machine or system is potential-free and secured against restarting.

This operating manual is divided into 7 sections.
In the main, the sections are directed at the following user groups:

Sections 1–3: directed at **everyone** who is involved in any way with the machine

Section 4: transport staff and user

Section 5: operator

Section 6: maintenance personnel

Section 7: servicing personnel (usually the manufacturer's own service technicians)

189631 273511
189650* 273479

1.3 Order-specific application

In its function and design, the machine described here is laid out specifically for the **size reduction** of:

Product:

Feed size:

Any other application or the processing of a product(s) other than the one(s) named above contravenes the order-specific application and is thus prohibited.

Observance of the operating manual and adherence to the maintenance requirements also form part of using the machine in an order-specific manner.

It is impossible for the manufacturer to be conversant with all the properties of the product(s) to be processed in the machine. Additional risks and hazards may be caused by certain products. It is therefore the user's responsibility to assess these additional risks if any and to introduce suitable countermeasures.

Without special safety measures, the machine is not suitable for processing potentially explosive and / or flammable products.

Without special safety measures, it is prohibited to process harmful or toxic substances with the machine.

Without special safety measures, it is prohibited to operate the machine in a potentially explosive atmosphere.

HOSOKAWA ALPINE is not liable if arbitrary changes or modifications are made to the machine/system without prior written consent.
This applies in particular to modifications that compromise the safety of the machine.

The manufacturer is also not liable if accessories provided by the user – especially with respect to safety-specific parts – do not conform with the relevant accident prevention regulations or are not installed properly.

The manufacturer is also not liable if the user neglects to carry out maintenance and servicing procedures or if he carries them out improperly. The quality of servicing or repair procedures can only be guaranteed if they are carried out by the manufacturer.

Spare parts must conform with the technical requirements stipulated by the manufacturer. Only the use of original spare parts will guarantee this in every case.

189631 273511
189650* 273479

1.4 Order-specific data sheet

Customer: ***Next Generation Recyclingm., AUT***

Order no.: ***R1 203433***

Machine no.: ***R1 203433/ 1000***

Construction year: ***2013***

	Design	Order no.
Mill drive		
Motor	***22 kW; 1 500 min^{-1}; 50 Hz***	***433365***
Belt pulley – motor	***V-belt pulley 4×SPZ×250***	***112008***
	V-belt pulley 4×SPZ×315	***157967***
Belt pulley – mill	***V-belt pulley 4×SPZ×180***	***105258***
Belts	***Narrow-gauge V-belts 4×SPZ×2240***	***004815***
	Narrow-gauge V-belts 4×SPZ×2360	***004816***
Speed	***Ø 250 approx. 410 - 2.050 min^{-1} (10-50 Hz)***	
	Ø 315 approx. 525 - 2.050 min^{-1} (10-39 Hz)	
Grinding elements		
Flat steel beater unit	$n_{max.}$: ***2 050 min^{-1}***	***189629***
Band steel beater unit	$n_{max.}$:	.....
Hammer beam beater unit	$n_{max.}$:	.....
Rigid beater unit	$n_{max.}$:	.....
Toothed insert	.....	.....
Screen		
Screen plate	.....	.....
Wire mesh	.....	.....
Screen support	.....	.....
Bar grate		
Gap width	***1.0 mm; 1.5 mm; 2.0 mm;***	
	3.0 mm; 4.0 mm; 5.0 mm	***431419***
Safety equipment		
Interlock	***magnetic interlock***	***084788***
Standstill monitor	.....	.....
Bearing		
Lubricant	***ARCANOL MULTITOP; FAG Ltd.***	

189631 273511
189650* 273479

1.5 Principle of operation

The feed material must be charged uniformly to the running mill through the feed chute into the grinding zone, where it is caught up by the beaters and comminuted. Comminution is a result of the material being beaten into the air by the rotating beaters and then impacting against the impact plate of the feed chute and against the edges and walls of the screen or the bar grate. The feed material is retained in the mill and comminuted until such time as it can pass through the screen apertures or the grate openings.

The rotating parts of the mill generate an air flow. The air flow cools the machine and the product and also serves to transport the material in the machine.

The end product that passes through the screen perforations or grate openings is discharged through an opening in the bin floor.

If the end product is discharged entrained in the air, additional air must be intaken by a fan via a suction tank. The air flow transports the product to a collection device (cyclone, filter, etc.).

1.6 Mill features

- Sturdy welded design.
- Excellent accessibility because the top section of the mill can be hinged back. Work to the beater unit can thus be carried out and the screen exchanged.
- The wear-sensitive surfaces are protected by means of exchangeable wear plates.
- The shaft is supported outside the housing in bearing housings by means of permanently lubricated anti-friction bearings.
- The machine is equipped with a belt drive. The speed can be altered by changing the belt pulley (only after consultation with HOSOKAWA ALPINE).
- With the mill top section hinged back, the swing beaters of the flat steel, band steel and hammer beam beater units can be exchanged by removing the beater shafts, or can be turned over to prevent irregular wear patterns.
- The rigid beater unit can be lifted out of the bearing housings together with the anti-friction bearings to permit assembly operations. Once the bearings have been removed, the beaters can be pulled off the shaft.
- An adjustable slide plate limits the intake opening and prevents product from leaking out of the grinding zone.
- With the top section removed, the screen be turned in rotational direction and removed.
- A variety of screens with different screen plate gauges as well as perforation shapes and diameters are available.

189631 273511
189650* 273479

- The wire mesh screen is bolted securely to the screen support. The screen is not removed from the support until after removal from the mill.
- Bar grates with different gap widths can be employed.

The hammer mill can be equipped with:

Beater unit

- Flat steel beater unit (E)
- Flat steel beater unit, wear protected (E)
- Flat steel beater unit with edge beaters
- Band steel beater unit D394 (F)
- Band steel beater unit D410 (F)
- Hammer beam beater unit (G)
- Hammer beam beater unit, wear protected (G)
- Rigid beater unit (H)

Screen/bar grate

- Screen (perforated plate) (B1), design and perforations order-specific
- Screen (wire mesh) (B1), wire gauge and mesh width order-specific
- Stabrost (C) – gap width 2 – 60 mm order-specific

In the case of the flat steel beater unit and the rigid beater unit, a toothed insert can be employed instead of the impact plate (A5).

189631 273511
189650* 273479

1.7 Mill design

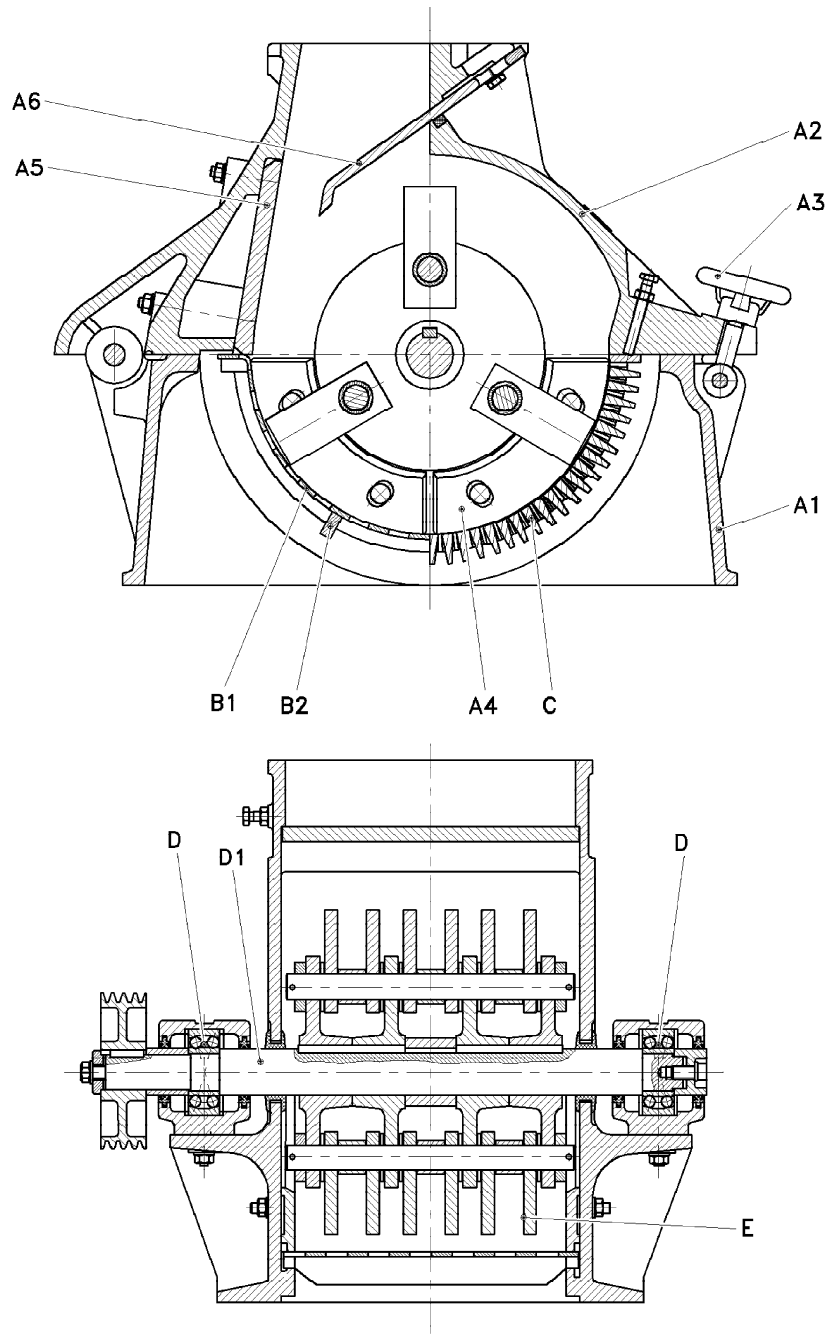

A1 Housing bottom section
A2 Housing top section
A3 Bolted connection
A4 Wear plate
A5 Impact plate
A6 Slide plate

B1 Screen
B2 Screen support
C Bar grate
D Bearing components
D1 Shaft
E Beater unit
(here: flat steel beater unit)

Figure 1: Mill design

1.8 Safety interlock (order-specific)

1.8.1 Mechanical interlock with lock

The mechanical interlock comprises a detent pawl with cylinder lock located on the hinge plus a cylinder lock designed for installation in an ON-OFF control switch.

Because it must not be possible to open the housing top section until the beater unit has come to a standstill, other safety measures must be taken, e.g. a braking unit for the drive motor, etc.

Use of the mechanical interlock on its own, i.e. without any additional safety devices or measures, is NOT permitted!

1.8.2 Interlock without standstill monitor

The interlock comprises a detent pawl with integrated magnetic or pneumatic interlock located at the hinge in combination with an on-site control unit and an ON-OFF control switch.

Because it must not be possible to open the housing top section until the beater unit has come to a standstill, other safety measures must be taken, e.g.

- Standstill monitor (detects when the drive motor has come to a standstill) with control unit as per EN 954-1, Category 3.
- Interlocked access-inhibiting safety barriers or enclosures with inhibitor as per Section 3.6 EN 953 and EN 1088; control unit as per EN 954-1, Category 3.

Use of the magnetic interlock on its own, i.e. without any additional safety devices or measures, is NOT permitted!

1.8.3 Interlock with standstill monitor

The interlock comprises:

- a detent pawl with integrated magnetic or pneumatic interlock in combination with an on-site control unit and ON-OFF control switch;
- a standstill monitor. The standstill monitor is a relay whose operating principle bases on the generator effect of motors. The relay is housed in the control cabinet or in a separate switch box.

Interlock control unit as per EN 954-1, Category 3.

189631 273511
189650* 273479

2 Safety

2.1 Safety notices

The following symbols and notices are used throughout this operating manual to indicate information of particular importance:



DANGER
indicates imminent danger.
Non-observance can lead to serious or even fatal injuries.



WARNING
indicates a potentially dangerous situation.
Non-observance can lead to serious or even fatal injuries.



CAUTION
indicates a potentially dangerous situation.
Non-observance can lead to light or moderately severe injuries.



NOTICE
indicates a potentially dangerous situation.
Non-observance can lead to machine damage or damage to the environment.

2.2 Directives

The machine's design and equipment conform with the regulations, standards, directives and specifications featured in the Manufacturer's Declaration or the Declaration of Conformity.

Electrical equipment

The electrical equipment of the machine and system components conforms to the VDE standards for plant and processing equipment with nominal voltages of up to 1000 V (low-voltage directive); VDE 0100, 0113 (EN 60204, Part 1), and 0660, in as far as the machine was delivered with complete electrical equipment.

Accessories

Machine and system parts, safety devices, and electrical and measuring equipment which do not form part of the delivery scope must also conform to the EC directives, the relevant accident prevention regulations and the VDE standards.

189631 273511
189650* 273479

2.3 Safety equipment

The safety equipment must not under any circumstances be modified, removed or bypassed (e.g. by undertaking changes to the machine itself).

Any defects to the safety equipment must be remedied immediately.

Inspection intervals

- Start of every shift (discontinuous operation)
- Once a week (continuous operation)
- After any maintenance or servicing procedures

Inspection procedures

- Prescribed condition and location
- Secure seating of connections
- Prescribed function

If any safety devices are defective:



WARNING
Rotating machine parts.
Injuries possible when touching parts or reaching into the machine.
Never touch any rotating machine parts.

189631 273511
189650* 273479

Device/Measure	Function	Inspection
Mechanical interlock (one key for both interlock and control panel).	Prevents the housing top section from being opened while the drive is switched on because the key for the interlock is inserted into the lock on the control panel during operation.	Switch on the machine. Interlock OK if the detent pawl cannot be budged and thus the housing top section is blocked. It must not be possible to withdraw the key from the control panel.
or: Magnetic or pneumatic interlock at hinge w/o standstill monitor (control unit order-specific).	Prevents the housing top section from being opened while the drive is switched on.	Switch on the machine. Interlock OK if the detent pawl cannot be budged and thus the housing top section is blocked.
	An integrated limit switch prevents the drive from being switched on while the housing top section is open.	Close the housing top section, shift the detent pawl out of the way. Interlock OK if the machine cannot be switched on.
or: Magnetic or pneumatic interlock at hinge with standstill monitor (control unit and standstill monitor order-specific).	Prevents the housing top section from being opened while the drive is switched on and also while it is running down.	Switch off the running machine. Interlock OK if the detent pawl cannot be budged while the drive is running down and thus the housing top section is blocked.
	An integrated limit switch prevents the drive from being switched on while the housing top section is open.	Close the housing top section, shift the detent pawl out of the way. Interlock OK if the machine cannot be switched on.
Safety guard at drive (order-specific).	Makes the belt drive tamperproof.	Visual inspection: Installed and secure?
Securely bolted machine parts (except bolted connection A3).	Tools needed to undo bolted connections.	Visual inspection: Installed and secure?
EMERGENCY-STOP actuator close to machine.	Switches off the drive and possibly also other system sections.	Switch on the machine and possibly also other system sections (w/o product). Interlock OK if the machine and system sections shut down instantly the EMERGENCY-STOP actuator is pressed.

189631 273511
189650* 273479

2.4 Safety regulations

Read carefully and proceed accordingly!



DANGER
Incorrect operation or misuse can cause serious or even fatal injuries.

The user is charged with ensuring that the following points are adhered to:

- **Operation, maintenance and servicing procedures** are only to be carried out by trained and skilled personnel who are fully conversant with the safety regulations and the machine's operating instructions.
- All such procedures are to be supervised by **qualified personnel**.
- The **qualified personnel** must have been both designated and authorised by the user or the occupational safety delegate.
- The **master switch** of the machine must be lockable.
- Before **opening** the machine or **removing** any connecting ductings or machine components and before undertaking any **adjustment, maintenance or servicing procedures**:
  - Shut down the system and machine.
  - Switch off the master switch and secure it against unauthorised or unintentional switching on.
  - Wait until the drive has come to a complete standstill.
  - Wait until the fan air has stopped circulating.
  - Wait until the dust in the machine and system settles.
- Always interrupt the power supply before undertaking any work to the **electrics** and before opening the control gear cabinet.
- The **warning notices** posted on the machine may neither be removed, painted over nor altered. Replace any damaed or illegible notices immediately.
- Do not undo the **bolted connections** connecting the hinge-back top section and the housing bottom section until the drive is switched off and has come to a **complete standstill.**
- It is prohibited to operate the machine **without a feed chute** and **without a discharge housing.**
- The auxiliary components such as feed chute and discharge housing must be **tamperproof**, i.e. it must not be possible under any circumstances to reach through and access the rotating parts.
- It is prohibited to operate the machine unless the **safety guard** (belt drive guard) is installed.
- **Never remove the belt guard during operation.**

189631 273511
189650* 273479

- The machine must be equipped with a **safety interlock** as per Section 1.8 and this in turn integrated into the electrical interlocking system. Function:
  - The interlock does not enable the opening mechanism of the housing top section until the beater unit has come to a **complete standstill.**
  - The machine and system cannot be **switched on** if the housing top section is open.
- If the mechanical interlock is used, the two **cylinder locks** (one on the detent pawl and one on the ON-OFF switch) must be **identical in design.**
  Safety reasons dictate that only **one** of the supplied keys may be used. The other keys are reserve keys and must be kept in **safekeeping.**
- It is not permitted to **switch on** the machine until the housing top section is closed and securely bolted to the housing bottom section.
- If processing **toxic or harmful substances**, the user is charged with undertaking corresponding safety measures such as providing suitable protective clothing (gloves, face mask, protective overalls), or installation in a separate and secure room that may only be entered when suitably clothed.

During installation and operation of the machine and auxiliary equipment, the user must pay attention to:

- The recommendations in this operating manual.
- The relevant general accident prevention regulations.
- The relevant local accident prevention regulations.
- The specific directives of the competent trade association and/or the relevant national directives.

The user is responsible for ensuring that the prescribed accident prevention measures are carried out, the accident prevention regulations are adhered to. and that the safety equipment is installed and in good working order at all times.

It is strictly prohibited to operate the machine until the user has established that

- the machine has been properly assembled and installed
- all safety devices are fitted and fully functional
- Use in EU member countries:
  the entire machine or the system into which the machine is to be configured conforms to the EC machine and plant directive and that a CE conformity declaration to this effect is on hand.

189631 273511
189650* 273479

2.5 Noise

The machine belongs in the category of plant equipment whose noise emission generally reaches a level of 90 dB(A) or more (as per DIN 45 635).

The noise level generated by the machine is governed by various factors, e.g. type of product, site of machine installation, etc.

It is therefore impossible to quote a generally valid sound pressure level.

In Germany, the **accident prevention regulation on noise – VBG 121 –** must be observed

In other countries, the respective national standards and directives must be observed.

If the **max. level as per VBG 121 §10 of 85 dB(A)** is exceeded:



WARNING
Noise!
Danger of noise pollution and/or increased accident risk.
Use suitable ear protectors.

2.6 Workplace

- **Automatic product feed**

  No personnel are required during actual operation.
  The workplace for the machine or system operating personnel is normally in front of the control panel.
  The workplace must be kept clear and uncluttered at all times.

- **Manual product feed**

  The product is fed manually to the machine via a feed chute.
  The workplace for the machine or system operating personnel is in the feed zone.
  The workplace must be kept clear and uncluttered at all times.

- **Space requirement for maintenance and servicing**

  Make sure enough space is available around and above the machine to carry out maintenance and servicing procedures (cleaning, wear control, exchanging the grinding elements, exchanging the belts, etc.).

- **EMERGENCY-STOP actuators**

  One or more EMERGENCY-STOP actuators must be provided. The actuators must be installed such that they are easy to access. At least one EMERGENCY-STOP actuator must be located close to the operating position in the opening and closing area which permits full view of same.

189631 273511
189650* 273479

3 Technical Specifications

3.1 Main dimensions and connections

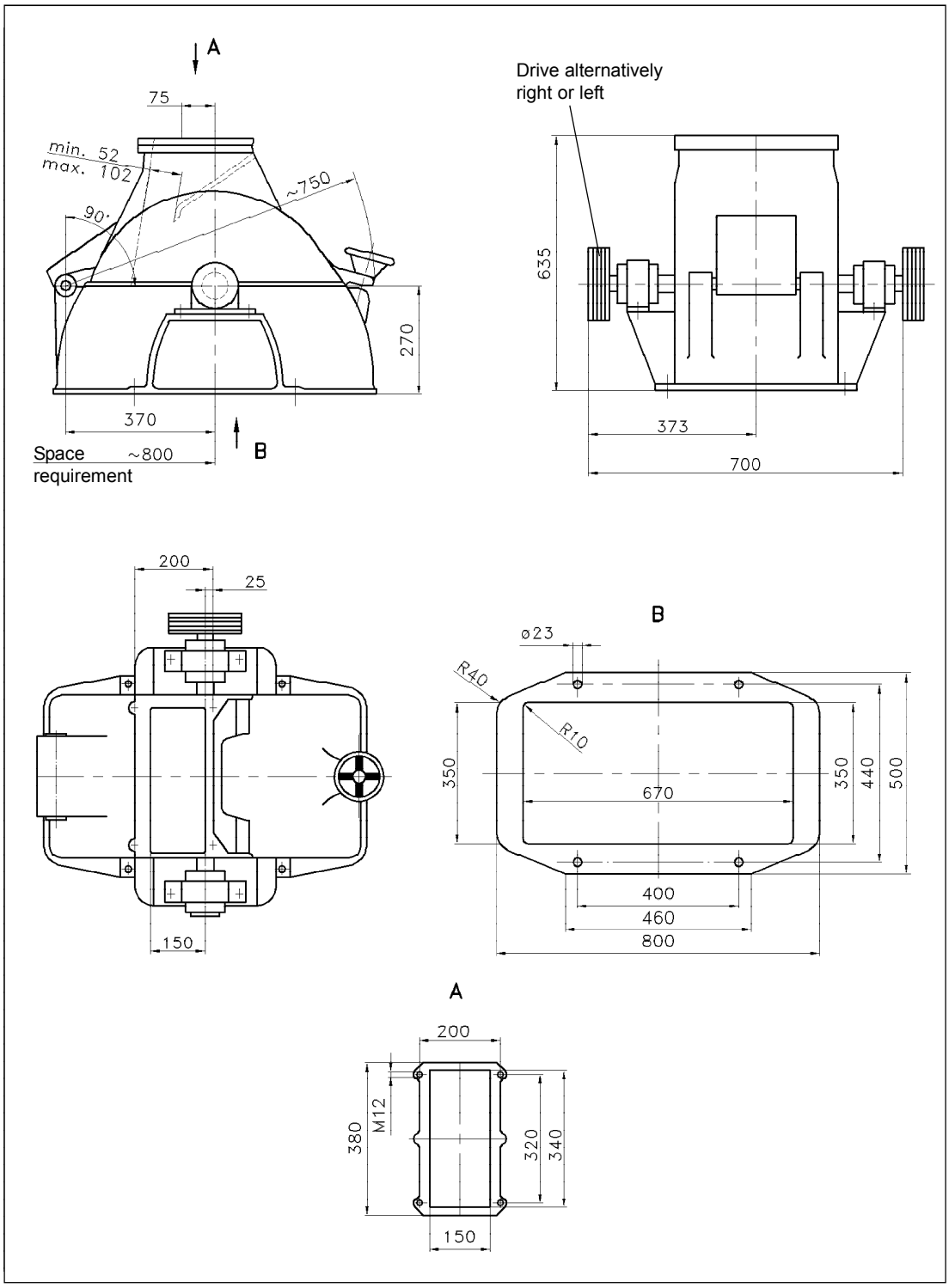

Figure 2: Main dimensions and connections

189631 273511
189650* 273479

3.2 Machine specifications

Mill

Beater circle	approx.	385 mm
Grinding chamber width	approx.	320 mm
Run-up time (w/o product)	approx.	15 s
Running-down time	approx.	60 – 65 s
Screen gauge	from	0.5 – 4 mm
Bar grate, gap width	from	2 – 60 mm
Mass moment of inertia – flat steel beater unit	approx.	1 kgm^2
Air data for n = max.		
Flat steel, hammer beam and rigid beater unit	approx.	270 kgm^3/h
Band steel beater unit	approx.	380 m^3/h

3.3 Drive

Drive with narrow-gauge V-belts 4 x SPZ DIN 7753

Standard drives (see also Section 1.4):

Motor power [kW]	V-belt pulleys Motor d_{W1} [mm]	V-belt pulleys Mill d_{W2} [mm]	Motor speed n [rpm]	Mill speed n [rpm]
7.5	125 250	180 180	1445 1445	980 1930
11	125 250	180 180	1460 1460	990 1980
15	160 250 355	180 180 180	1450 1450 1450	1260 1970 2800
18.5	180 200	180 180	1470 1470	1440 1600
22	125 224 250 280 315 355	180 180 180 180 180 180	1465 1465 1465 1465 1465 1465	990 1785 2030 2230 2510 2830

189631 273511
189650* 273479

Maximum permissible speed

Flat steel, hammer beam and rigid beater unit: **n = 2050 rpm**

Band steel beater unit **n = 2850 rpm**



WARNING
Breakage of rotating components, e.g. beater unit, shaft, drive, etc.
Never exceed the maximum speed!

3.4 Weights

Flat steel beater unit	approx.	45 kg
Band steel beater unit	approx.	38 kg
Hammer beam beater unit	approx.	45 kg
Rigid beater unit	approx.	42 kg
Total weight of machine (w/o feed chute, w/o discharge housing, w/o motor)	approx.	420 – 460 kg
Dynamic weight	approx.	700 kg

3.5 Tools

All maintenance and servicing procedures can be carried out with standard trade tools.

189631 273511
189650* 273479

4 Preliminary Procedures

4.1 Transport / machine storage

4.1.1 Transport

Only skilled and qualified personnel with special knowledge of transport operations are permitted to transport the machine.

When transporting the machine, the 89/655/EEC directive on the use of technical equipment or the corresponding national standards and directives must be observed.

In Germany, the following must be observed:

- When selecting and using lifting units, slinging aids and transfer equipment, the indicated weight and the accident prevention regulation **"Load suspension units used in hoisting operations"** (VBG 9a).
- When selecting and using handling trucks and trollies for transportation purposes, the indicated weight and the accident prevention regulation **"Handling trucks"** (VBG 12a and 36).

If using a lifting unit for transport, screw the four supplied M12 ring bolts - ISO 3266 (580) into the top section (threaded bores for the feed element) and make proper use of them as lifting lugs to attach the machine to the lifting unit as shown in the diagram.

During transportation, the machine top section must be securely bolted to the bottom section. Remove the feed element prior to transport.

Determine the centre distance (a) during transport.

189631 273511
189650* 273479

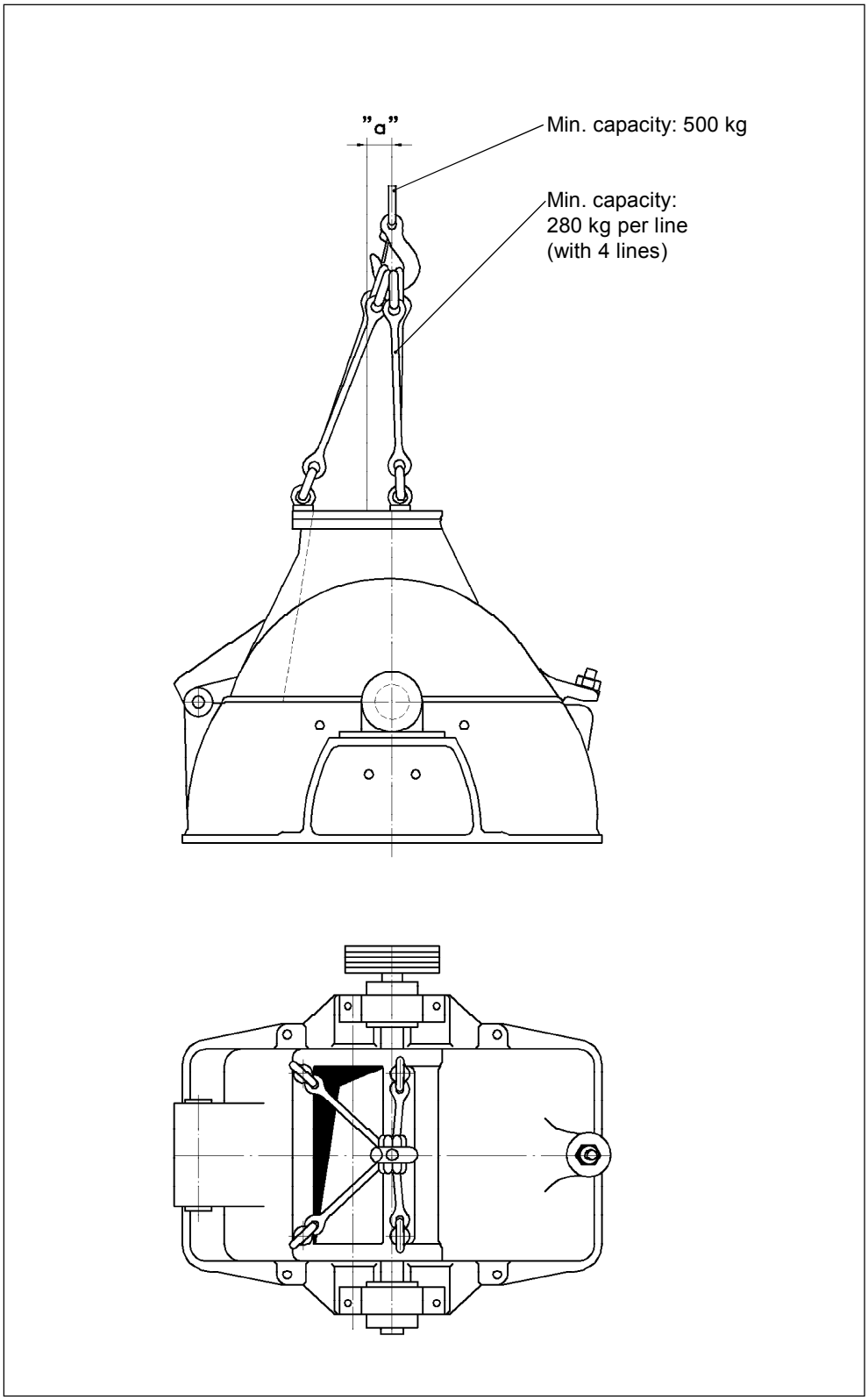

Figure 3: Transport with lifting equipment

189631 273511
189650* 273479

4.1.2 Machine storage

If storing the machine for any length of time before use, make sure that it is adequately protected against environmental influences and the weather. We advise storing the machine in a dry warehouse or similar. Cover the machine with a tarpaulin to protect it against dirt. Water and any condensation must be able to run off freely. Store the machine parts on wooden planks and protect polished parts against corrosion.

Store electrical components in a dry area that is protected against aggressive atmospheres, direct sunlight, and extremes in temperature.

4.2 Installation

Installation only on vibration-free substructures of sufficient stability such as substructures, platforms or intermediate floors, etc. in accordance with the local conditions and the project drawing.

A discharge housing for the fines must be installed under the mill or a suction tank for pneumatic material removal.
Ensure that enough overhead space is available to hinge back the top section.

A **rubber seal** must be inserted between the mill foot and the installation surface for purposes of dust sealing and vibration damping.
If installing the machine on concrete or an iron substructure, use of an "anti-vibration mounting frame" is recommended.

Install the feed chute, at the same time inserting a seal between the chute and the machine.

4.3 Drive

If the drive is installed on site, use slide rails to enable tensioning the V-belts. Pay attention to exact alignment of the V-belt pulleys and correct belt tension. In this respect, refer to the technical instructions appended to this manual (TA 001/1 "Narrow-gauge V-belts").
Equip the the drive with a belt guard which conforms to the relevant accident prevention regulations and/or the EC machine and plant directive.

4.4 Speed

Speed in accordance with the values given in Sections 1.4 and 3.3 and those on the nameplate.
Never change the speed without consulting HOSOKAWA ALPINE beforehand.

189631 273511
189650* 273479

4.5 Direction of rotation

The beater units must rotate towards the intake chute – see the arrow indicating the rotational direction on the machine.



WARNING

Ejecting product is a safety hazard.

Operation in the opposite direction can cause feed material to catapult out of the feed opening!

Keep to the rotational direction indicated by the arrow!



NOTICE

If using a **screen with rasp-like perforations**, insert it such that the beaters move towards the screen apertures.

4.6 Electrical connection

Carry out the electrical connection in accordance with the supplied (order-specific) or on-site circuit diagrams.

The electrical connection is to be carried out on site by a qualified electrician. The electrical equipment and design thereof must correspond to the VDE standards 0100, 0113 (EN 60204, Part 1), and 0660 and to the relevant local and national regulations. Pay attention to the direction of rotation (Section 4.5)!

When carrying out electrical work, pay attention to the accident prevention regulation **“Electrical Plant and Production Equipment” (VBG 4)** and/or the relevant national directives and standards!

Fit an ammeter with threshold value indication in visual range of the mill to monitor the rate of current loading.

189631 273511
189650* 273479

5 Operation

Pay attention to the safety regulations in Section 2.4!



WARNING
Rotating machine parts.
Injuries possible when opening or reaching into the machine.
Ejecting product.
Injuries possible if product is inhaled or gets into the eyes.
Before removing any connected elements (e.g. feed chute, discharge housing) and before opening the machine:

- Make sure that the machine and system (product feed) are switched off and secured against unauthorised or unintentional restarting.
- Wait until the drive comes to a standstill.
- Wait until the dust in the machine or system settles.

5.1 Opening and closing the machine (mech. interlock)

5.1.1 Opening the machine

- Shut down the system and machine as described in Section 5.8.
- Withdraw the key from the ON-OFF switch and use it to unlock the cylinder lock (A11) on the detent pawl (A10).
- Wait until the drive comes to a complete standstill.
- Now undo the bolted connection (A3) and flip it down.
- Shift the detent pawl (A10) with cylinder lock downwards into the "unlocked" position.



CAUTION
Safety hazard when opening the top section!
Grip the top section firmly and hinge it back **completely**.
Keep all body parts out of the slewing zone.

- Hinge back the housing top section (A2) to the stop.

An opened machine cannot be switched on, because the key cannot be withdrawn until the cylinder lock is depressed and the cylinder lock cannot be depressed until the housing top section is closed and the detent pawl is restored to its interlocked position.

189631 273511
189650* 273479

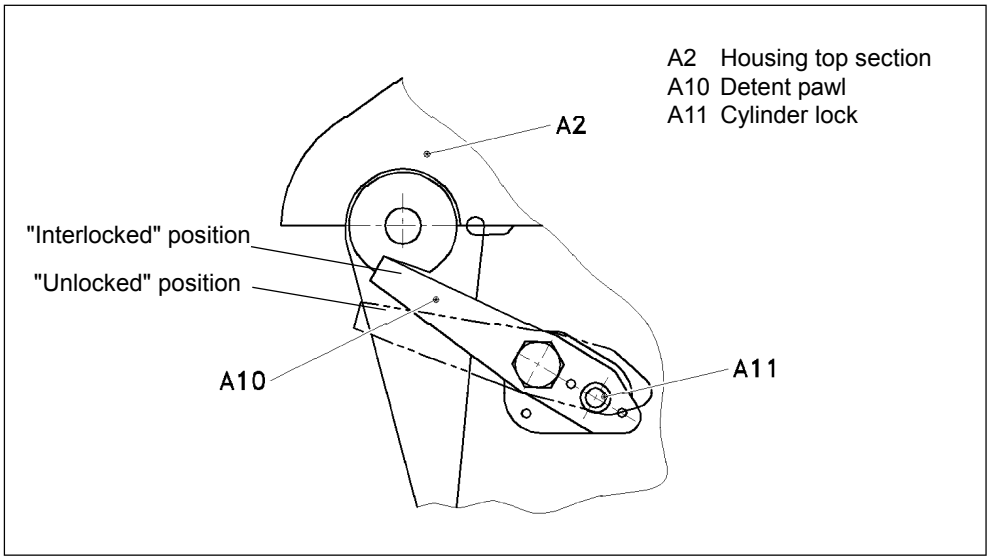

Figure 4: Interlock with detent pawl and cylinder lock

5.1.2 Closing the machine

- Clean the contact surfaces between the housing top and bottom sections.

CAUTION
Safety hazard when closing the housing top section.
Close the top section slowly. Do not let it slam shut!
Keep all body parts out of the slewing zone.

- Close the housing top section (A2).
- Flip up the bolted connections (A3) and tighten.
- Move the detent pawl (A10) with cylinder lock into its "interlocked" position.
- Lock the cylinder lock (A11) and withdraw the key. Use the withdrawn key to unlock the lock on the ON-OFF switch.
- Start up the machine and system as described in Section 5.4.

If the closed machine is to remain out of operation, switch off the ON-OFF switch, lock it and deposit the key in safekeeping.

189631 273511
189650* 273479

5.2 Opening and closing the machine (magnetic or pneumatic interlock)

5.2.1 Opening the machine

- Shut down the system and machine as described in Section 5.8.
- Wait until the drive comes to a complete standstill.
  If using a standstill monitor (order-specific), a GREEN control lamp illuminates as soon as the beater unit has run down completely.
- Now undo the bolted connection (A3) and flip it down.
- Once the standstill monitor has enabled the opening mechanism, shift the detent pawl (A10) with magnetic or pneumatic interlock (A12) into its "unlocked" position.

CAUTION
Safety hazard when opening the top section!
Grip the top section firmly and hinge it back **completely**.
Keep all body parts out of the slewing zone.

- Hinge back the housing top section (A2) to the stop.

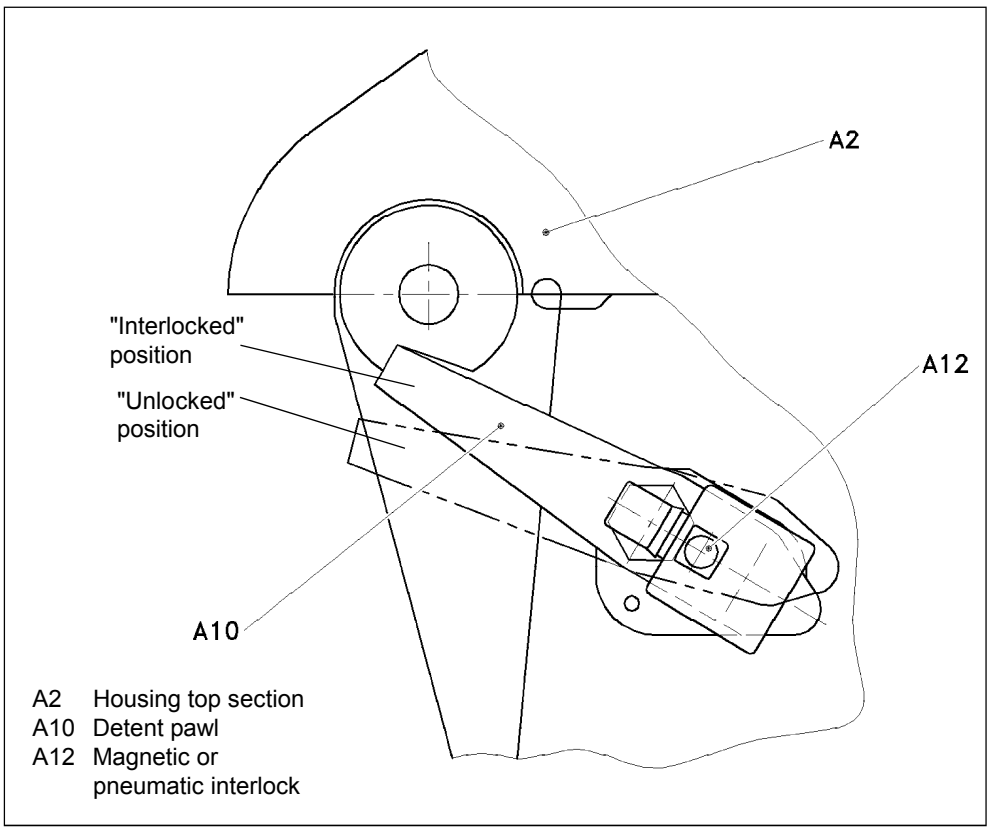

Figure 5: Interlock with detent pawl and magnetic or pneumatic interlock

189631 273511
189650* 273479

5.2.2 Closing the machine

- Clean the contact surfaces between the housing top and bottom sections.



CAUTION
Safety hazard when closing the housing top section.
Close the top section slowly. Do not let it slam shut!
Keep all body parts out of the slewing zone.

- Close the housing top section (A2).
- Flip up the bolted connections (A3) and tighten.
- Move the detent pawl (A10) with magnetic or pneumatic interlock (A12) into its "interlocked" position. The detent pin engages.
- Start up the machine and system as described in Section 5.4.

If the closed machine is to remain out of operation, switch off the ON-OFF switch, lock it and deposit the key in safekeeping.

5.3 Preliminary procedures

Pay attention to the safety regulations in Section 2.4!

Prerequisites for perfect operation are the correct set-up of the system in accordance with the design drawing and the proper assembly and connection of the grinding elements, the ductings, valves and system components.

It is not permitted to change the application (throughput rate, speed, end-product fineness) or the nature of the feed product without consulting HOSOKAWA ALPINE first.

- Check the safety equipment (Section 2.3).
- Check the type and condition (wear) of the machine equipment as listed in Section 6.3.
  If necessary, exchange parts as described in Section 7.
- Turn the beater unit over by hand and check the beaters for freedom of movement.
- The housing top and bottom sections must be securely bolted to each other at the contact surfaces.
- Check all bolted connections and flange connections for correct assembly and for leaks.
- Check the bar grates or screen including screen support for proper installation.

189631 273511
189650* 273479

Additional procedures at first commissioning, after maintenance and/ or servicing:

- Check the system set-up!
- Check the electrical connections.
  Check the direction of rotation.
- Check the belt tension.
- Make sure the belt guard is installed properly.
- Check the machine in idling operation for at least 20 minutes.
  – Check for any scraping noises or vibrations.
  – Check the temperature of the bearings.

5.4 Start-up

Switch on in the following sequence:

- Fan, discharge and handling devices.
- Machine – wait until the motor has run up to power.
- Switch on the product feed device. Gradually increase the feed rate to the permitted maximum (observe the current loading indicated on the ammeter).

5.5 Operation – product feed



CAUTION

Sharp-edged feed material, ejecting product.

Always wear protective clothing (safety gloves, safety shoes, safety helmet)!

Ejecting product.

Wear a face screen and protective goggles.



WARNING

Noise.

Danger of hearing damage.

Wear suitable ear defenders!

Keep the feed rate as uniform as possible. If necessary, install an ammeter to help monitor the feed rate.

189631 273511
189650* 273479

An excessively high feed rate can cause the machine to stall and block up. In this case, switch off the mill immediately. Clear out the feed chute and grinding chamber and proceed as described in Sections 5.3 and 5.4.

It is advisable to install an electrical interlocking system as a preventative measure against faults.



NOTICE

Damage to the grinding elements and to the machine.

The feed product must be free from tramp material (e.g. screws, nails, stones).

Severe damage to the machine is otherwise possible.

After all feed product has been fed to the machine, let the machine run on until no more end product discharges or until the current loading value drops to idling value. Then switch off the machine.

5.6 Overload



NOTICE

Do not exceed the machine's power limit.

Damage to grinding elements.

High wear. Overload of drive belts and of the drive.

Frequent overload or machine blockages can cause motor damage.

Pay attention to the safety regulations in Section 2.4!

- Pay attention to any abnormal noises!
- In case of an overload (blocking, stalling), switch off the machine immediately and secure it against restarting (Section 5.8).
- Open the machine (Section 5.1 or 5.2). Clean out the grinding chamber. Locate and correct the cause of the overload. Retighten all screws.
- Turn the beater unit over by hand. Ensure that the beaters rotate freely and correct if necessary.
- Close the machine (Section 5.1 or 5.2).

189631 273511
189650* 273479

5.7 End-product discharge

5.7.1 End-product discharge into a discharge housing

The end product is discharged into a discharge housing

Remove end product from the discharge housing continually to prevent the flow of product exiting the mill housing from backing up. Remove any deposits promptly.

During the grinding process, the rotating parts of the mill generate an air flow. A prerequisite for the correct functioning of the mill is therefore a certain flow rate of air.

Separate the air from the end product. Dedust the exhaust air.

5.7.2 Pneumatic end-product discharge

The end product is discharged continuously via a suction tank. During the grinding process, the rotating parts of the mill generate an air flow. The volume of air thus generated is dependent on the type of product being ground, on the type of bar grate used (clearance between the bars) or on the type and size of screen perforations. The air flow rate required to discharge the end product is made up of the mill air and the fan air. Both "air flows" can be regulated by means of a control valve.

Closing the valve = less auxiliary air, more air through the mill, cooling and throughput better.

Opening the valve = more auxiliary air, less air through the mill, cooling poorer. Discharge of end product better.

A minimum air flow rate in the transport ducting must be maintained if the pneumatic transport of the ground product is to be guaranteed. Too low an air flow rate will cause the end product to back up.



NOTICE
A back up of the end product can lead to overfilling and thus to machine damage and blockages.

5.8 Shut-down

Switch off in the following sequence:

- Product feed device.
  Let the machine run on until the current loading has sunk to idling value or until no more end product exits the machine.
- Machine – wait until the motor runs down.
- Fan, discharge and handling devices.

If necessary, open the mill as described in Section 5.1 or 5.2.

189631 273511
189650* 273479

6 Maintenance

Pay attention to the safety regulations in Section 2.4!



WARNING

Rotating machine parts.

Injuries possible when opening or reaching into the machine.

Ejecting product.

Injuries possible if product is inhaled or gets into the eyes.

Before removing any connected elements (e.g. feed chute, discharge housing) and before opening the machine:

- Make sure that the machine and system (product feed) are switched off and secured against unauthorised or unintentional restarting.
- Wait until the drive comes to a standstill.
- Wait until the dust in the machine or system settles.

6.1 Lubrication

Dispose of used lubricants and dirty rags properly.

6.1.1 Mill bearing

The mill shaft is supported in two self-aligning ball bearings outside the mill housing.

Grease exchange:

As a rule, the grease filling will need to be renewed every 5 years or during a general and planned overhaul.

See Section 7.4 for details of grease exchange.

The dual-lipped seals (D6) in the bearing housing and the shaft seals (A7) at the shaft exit will also need exchanging every time the grease is exchanged. Lubricate the dual-lipped seals (D6).

Recommended lubricant K2K (KP2K) DIN 51825:

e.g. *ESSO-BEACON 2 or EP2*

SHELL-ALVANIA R2 or EP2

ARAL – HL2 or HLP2

or any other make of equivalent quality.

189631 273511
189650* 273479

6.1.2 Points to be lubricated occasionally

The following points require occasional lubrication:

- mill hinges
- joints and threads of the bolted connections (A3).
- oil seals (D12) at shaft exit
- if necessary, the shaft seals (A7)
- thread of the thrust bolt (B2)

Lubricant: standard machine grease.

6.1.3 Motor

Maintenance and lubrication in accordance with the manufacturer's instructions.

6.2 Cleaning



WARNING

Rotating machine parts.

Injuries possible when opening or reaching into the machine.

Ejecting product.

Injuries possible if product is inhaled or gets into the eyes.

- Never carry out cleaning procedures unless the machine is at a standstill and secured against restarting.
- Always wear suitable protective clothing (safety gloves, face mask, protective overalls, etc.).

The method and frequency of cleaning is dependent on the product being processed.

All cleaning waste (product residues, dirty cloths, dirty water, etc.) must be disposed of in a responsible and environmentally compatible manner.

6.2.1 Dry cleaning

Open the machine as described in Section 5.1.1 or 5.2.1.
If necessary, remove the screen (B1) or grate bars (C1).

It is usually sufficient to brush or wipe out the interior, although an industrial vacuum cleaner is more effective.



NOTICE

Never use compressed air for cleaning, as dust or dirt can get into the bearings.

Replace the screen (B1) or grate bars (C1).
Close the machine as described in Section 5.1.2 or 5.2.2.

189631 273511
189650* 273479

6.2.2 Wet cleaning

Wet cleaning is necessary only in special cases.
Make sure that no water gets into the suction line!
Ensure that the water can drain off directly underneath the machine.
Run the machine for a few minutes in neutral to dry it.

Wet cleaning with the machine open

Dry-clean the machine first as described in Section 6.2.1.
Spray out the stopped and open machine with water.



NOTICE
Because of the sensitivity of the bearings, it is not advisable to use a high-pressure cleaner!

Replace the screen (B1) or grate bars (C1).
Close the machine as described in Section 5.1.2 or 5.2.2.

Wet cleaning with the machine closed



WARNING
Rotating machine parts (beater unit).
Safety hazard when reaching into the machine.
Make sure the machine is tamperproof.
Wet cleaning **only**:

- if the machine is closed and securely bolted,
- if the feed chute is installed,
- if the discharge housing and/or screen or grate bars are installed.

Start the machine up as described in Section 5.4.
Direct a thin jet of water into the feed chute and rinse out the machine.

6.3 Wear control

Pay attention to the safety regulations in Section 2.4!

The components must be checked for function and wear by skilled personnel every 500 operating hours or more frequently if the product being processed is strongly abrasive. The user is charged with determining the inspection intervals and with carrying out the inspections.

189631 273511
189650* 273479

The following must be checked:

- the safety equipment for function (Section 2.3),
- all machine parts for wear,
- all moving machine parts for function,
- shaft seals (A7) at the shaft exit for function, exchange if necessary,
- the bolted connection (A3) between the housing top section and the housing bottom section for function,
- the belt tension, tighten if necessary,
- all seals for sealing integrity; exchange or repair as necessary,
- the machine for ragged running caused by an imbalance of the beater unit (irregular wear patterns).

Maximum wear rates

- screen (B1): max. 50% of its original gauge,
- grate bars (C1): max. 2 mm, or until the grinding performance deteriorates markedly.
- beaters (E1 / F1 / G1 / H1): max. 2 mm wear to the beater edges, or until the grinding performance deteriorates markedly.
- hardfaced beaters (E1 / F1 / G1 / H1): until the hardfacing is almost worn through.
- beater shafts (E2 / F2 / H2): max. 3 mm in diameter.
- wear plates (A4) and impact plate (A5): max. 4 mm of the original plate gauge.
- slide plate (A6): max. 2 mm.
- **all other machine parts** (machine walls, etc.): max. 1.5 mm.

The point where wear is worst is always decisive. If in doubt, contact HOSOKAWA ALPINE's Customer Service Department.

Advanced wear can be recognised by a reduction of the output capacity or deterioration of the grinding fineness.
Uneven machine running is an indication of irregular wear patterns on the rotating parts.



WARNING
Wear parts that are not exchanged promptly pose a safety hazard to the operating personnel and can also lead to machine damage.

189631 273511
189650* 273479

6.4 Spare parts

Only use those spare parts specified in the appended spare parts list.
With the exception of standard parts, all spare parts must be ordered from HOSOKAWA ALPINE!
Use of non-Alpine spare parts can lead to damage or defects which are not covered by our warranty.

It is advisable to use your own experience to build up a stock of the most frequently required spare parts.

Customary are:

- Wear plate (A4) with matching connection (A4.1, A4.2, A4.3)
- Impact plate (A5) with matching connection (A5.1, A5.2, A5.3)
- Toothed insert with matching connection
- Inlet slide (A6) with assembly fixings (A6.1, A6.2, A6.3)
- Shaft seal (A7)
- Screen (B1)
- Screen support (B2)
- Grate bars (C1)
- Suitable number of spacers (C2)
- Clamping bars (C3)
- Thrust bolt (C4) with counternut (C5)

Flat steel beater unit (E)

- Shaft (D1)
- Flat steel beaters (E1)
- Beater shafts (E2)
- Pin (E3)
- Spacers (E4, E5, E6)
- Beater hub (E7)
- Feather key (E8)
- Distance bushing (E9)

Band steel beater unit (F)

- Shaft (D1)
- Band steel beaters (F1)
- Beater shafts (F2)
- Pin (F3)
- Spacers (F4, F5, F6)

189631 273511
189650* 273479

- Beater hub (F7)
- Feather key (F8)
- Distance bushing (F9)

Hammer beam beater unit (G)

- Shaft (D1)
- Hammer beam beaters (G1)
- Beater shafts (G2)
- Pin (G3)
- Spacers (G4, G5)
- Distance bushing (G6, G9)
- Beater hub (G7)
- Feather key (G8)

Rigid beater unit (H)

- Shaft (D1)
- Beaters (H1)
- Tension rod (H2)
- Nut (H3) and lock washer (H4)
- Feather key (H5)
- Spacer (H6)

Bearing components

- Anti-friction bearings (D4, D5)
- Dual-lipped seal (D6)
- Locking ring (D7)
- Distance bushing (D8)
- Cover plate (D9) with screw (D10)
- Retaining disc (D11) with screw (D12)
- Feather key (D13)

- All seals
- Drive belts

When ordering spare parts, please specify:

Spare part number	as per appended spare parts list
Machine model	as per nameplate
Machine number	as per nameplate

189631 273511
189650* 273479

7 Servicing

Pay attention to the safety regulations in Section 2.4!



WARNING

Rotating machine parts.

Safety hazard when opening or reaching into the machine.

Ejecting product.

Injuries possible if product is inhaled or gets into the eyes.

Before removing any connected elements (e.g. feed chute, discharge housing) and before opening the machine:

- Make sure that the machine and system (product feed) are switched off and secured against unauthorised or unintentional restarting.
- Wait until the drive comes to a standstill.
- Wait until the dust in the machine or system settles.



CAUTION

When servicing the beater unit:

Exercise extreme care when turning the beater unit over by hand!
The beaters have extremely sharp edges and, as a result of the massive flywheel inertia of the beater unit, can suddenly "cartwheel" and cause serious injuries.
Always wear heavy-duty protective gloves!

Never carry out servicing procedures personally unless adequate expertise (skilled personnel) and facilities (tools, workshop) are available.

The quality of servicing or repair procedures can only be guaranteed if they are carried out by the manufacturer.

Worn parts (see Section 6.3) must be exchanged promptly.

When undertaking work to the beater unit (e.g. exchanging the beaters), the beater unit must be secured against unintentional rotation.
Required equipment: Wooden wedge jammed in between the side panel and the beater unit to prevent it rotating.

When installing parts, make sure the contact surfaces are absolutely clean and pay attention to perfect seating before fastening in place!

189631 273511
189650* 273479

7.1 Exchanging the impact plate (A5) and the slide plate (A6)

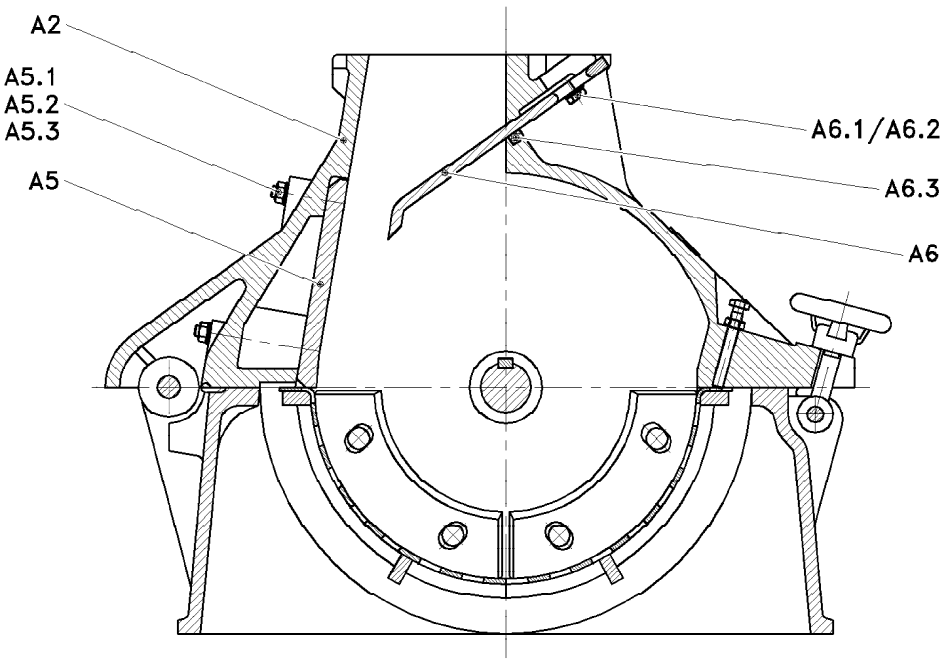

A2 Housing top section
A5 Impact plate
A5.1 Countersunk screw
A5.2 Nut
A5.3 Washer
A6 Slide plate
A6.1 Screw
A6.2 Washer
A6.3 Sealing strips

Figure 6: Mill in cross-section showing impact plate and slide plate

7.1.1 Slide plate (A6)

Removal

- Switch off the master switch and secure against restarting.
- Detach and remove the feed chute.
- Undo the screws (A6.1) and remove together with the washers (A6.2).
- Remove the sealing strips (A6.3).
- Grip the slide plate (A6) and lift it out of the housing top section (A2).

Installation

- Insert the slide plate (A6) into the slot of the housing top section (A2).
- Replace the screws (A6.1) together with the washers (A6.2).
- Adjust the slide plate (A6) to the desired opening dimension and tighten the screws (A6.1).
- Locate the sealing strips (A6.3) in the groove; tap in gently if necessary.
- Replace and fasten the feed chute.

7.1.2 Impact plate (A5)

Removal

- Switch off the master switch and secure against restarting.
- Release the nuts (A5.2) and remove them together with the countersunk screws (A5.1) and washers (A5.3).
- Remove the impact plate (A5).

Installation

- Clean the recess in the housing top section (A2) and impact plate (A5).
- Locate the impact plate (A5) into the recess of the housing top section (A2).
- Insert the countersunk screws (A5.1), locate the washers (A5.3) and then the nuts (A5.2) and tighten, thus fastening the impact plate (A5) in the housing top section (A2).

189631 273511
189650* 273479

7.2 Exchanging the screen (B1)

Removal

- Open the mill as described in Section 5.1.1 or 5.2.1.
- Pull the screen (B1) with screen support (B2) out through the circular groove to the front .
- If the screen or screen support jams in the guide grooves "Y", slacken off the nuts (A4.2). Shift the wear plates (A4) to the inside, thus enlarging the guide grooves "Y".

Installation

- Clean the guide grooves "Y" before reinstalling the screen.
- Insert the screen (B1) with screen support (B2) from the front and orient it in the circular groove towards the rear.

NOTICE
If using a **screen with rasp-like perforations**, insert it such that the beaters move towards the screen apertures.

- Position the wear plates (A4) to abut the screen (B1) and secure in place by tightening the nuts (A4.2).
- Once the screen is seated correctly, close the mill as described in Section 5.1.2 or 5.2.2.

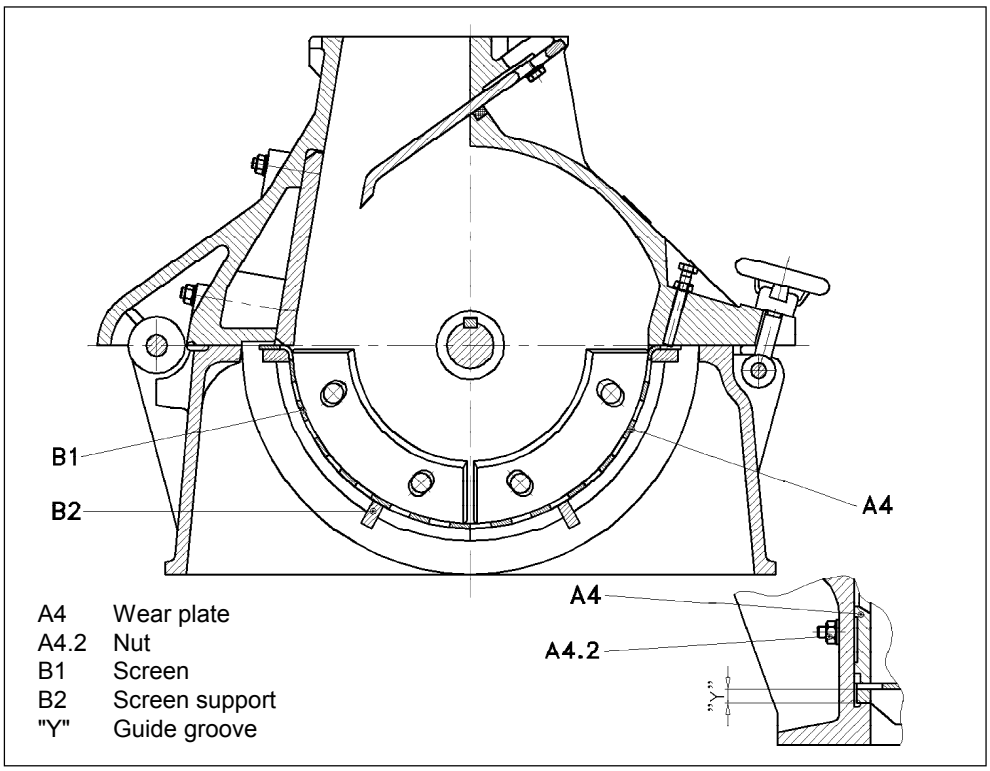

A4	Wear plate
A4.2	Nut
B1	Screen
B2	Screen support
"Y"	Guide groove

Figure 7: Hammer mill with screen, w/o beater unit

7.2.1 Wire mesh screen

Design reasons dictate that the wire mesh screen (B1) is secured to the screen support (B2) by means of metal strips (B2.1, B2.2).

Removal

- Remove the wire mesh screen from the mill as described in Section 7.2.
- Undo and remove the countersunk screws (B2.3).
- Remove the metal strips (B2.1, B2.2).
- Separate the screen (B1) from the screen support (B2).

Installation

- Locate the screen (B1) in the screen support (B2).
- Lay the metal strips (B2.1, B2.2) on the screen support (B2).
- Insert the countersunk screws (B2.3) and tighten, thus pressing the metal strips (B2.1, B2.2) against the screen (B1) and securing it on the screen support (B2).
- Replace the wire mesh screen from the mill as described in Section 7.2.

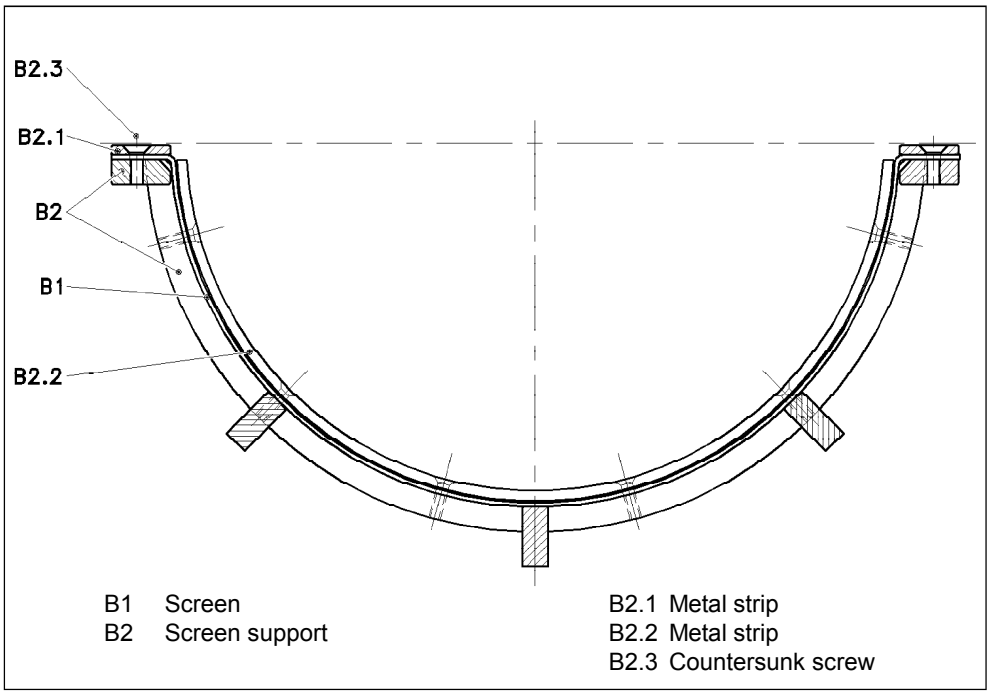

Figure 8: Wire mesh screen, removed

189631 273511
189650* 273479

7.3 Exchanging the bar grate (C)

The desired gap width (2 – 60 mm) is a function of the type of grate bars (C1) and spacers (C2).
The clamping bars (C3) are positioned at either end of the bar grate.
The force exercised by the thrust bolt (C4) on the front clamping bar (C3) serves to clamp the bar grate together.

Removal

- Open the mill as described in Section 5.1.1 or 5.2.1.
- Undo the counternut (C5) and slacken off the thrust bolt (C4).
- Remove the front and rear clamping bars (C3).
- Remove the grate bars (C1) and spacers (C2) alternately from both sides.
- If the grate bars (C1) and spacers (C2) jam in the guide grooves "Y", slacken off the nuts (A4.2). Shift the wear plates (A4) to the inside, thus enlarging the guide grooves "Y".

Installation

- Clean the guide grooves "Y".
- Insert grate bars (C1) and spacers (C2) alternately into the guide grooves "Y", finishing off with the clamping bars (C3).
- Position the wear plates (A4) to abut the grate bars (C1) and secure in place by tightening the nuts (A4.2).
- Once the grate bars (C1) are located and seated correctly, close the mill as described in Section 5.1.2 or 5.2.2.
- Tighten the thrust bolt (C4), thus clamping the bar grate (C) together.
- Secure the thrust bolt (C4) with the counternut (C5).

189631 273511
189650* 273479

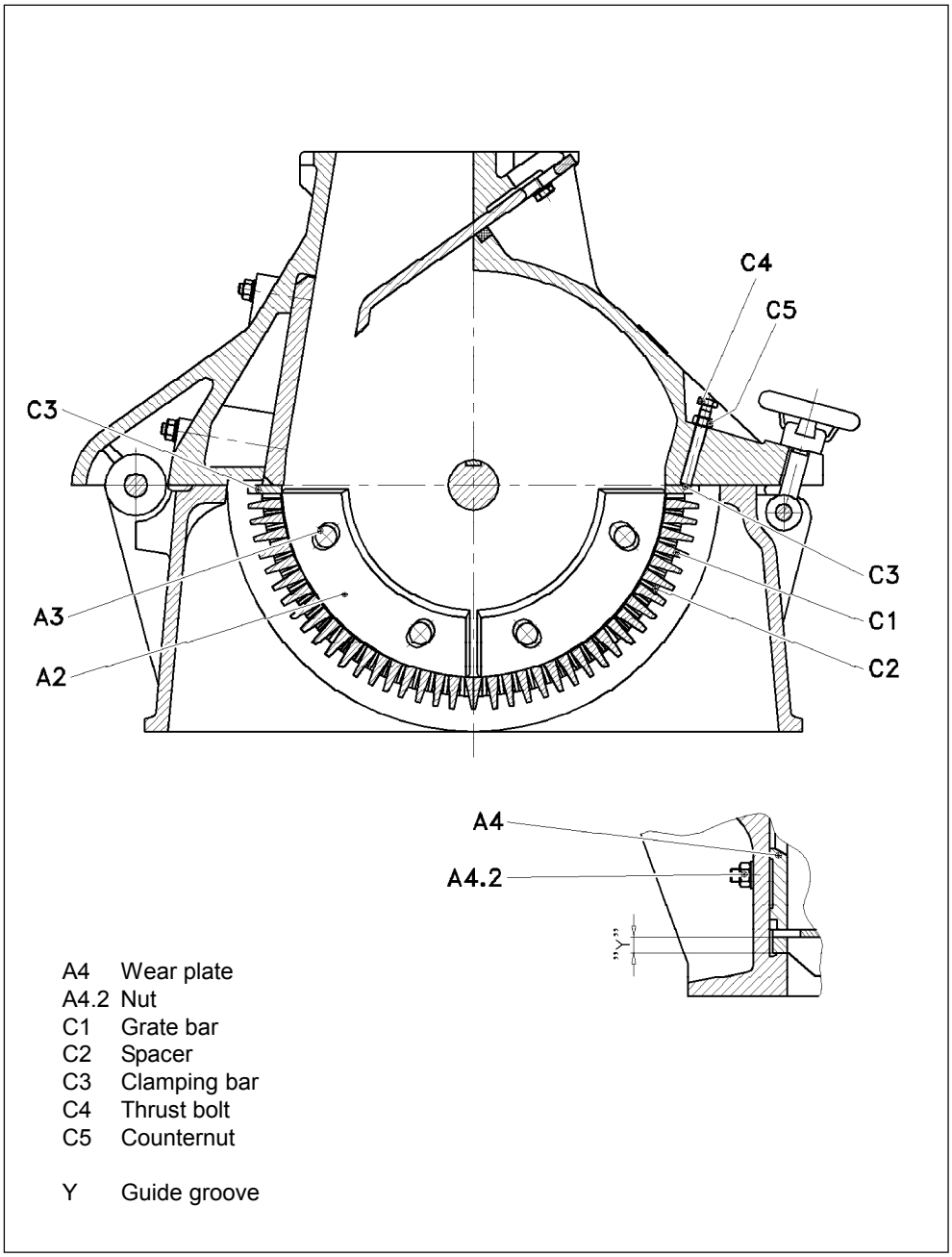

A4 Wear plate
A4.2 Nut
C1 Grate bar
C2 Spacer
C3 Clamping bar
C4 Thrust bolt
C5 Counternut

Y Guide groove

Figure 9: Hammer mill with bar grate, w/o beater unit

189631 273511
189650* 273479

7.4 Exchanging the beaters and beater shafts



NOTICE

The beaters can be used on both sides; once one side is worn, simply turn the beater over and use the opposite side.

The service life of the beaters can be prolonged by having them professionally hardfaced before wear starts to set in.

When remounting the beaters, make sure their weight is identical!

If a single beater is to be exchanged, then either the beater located diametrically opposite it must also be replaced, or its weight must be adjusted to match that of the new beater.

Pay attention to the set numbering (same weight).

Beaters with the same number (same weight) must be installed on the same beater shaft.

Although band steel beaters are not numbered, each set is supplied in a separate bundle.

Beaters belonging to different sets may not be mixed with each other.

The procedure for exchanging the beaters and beater shafts is detailed below using the flat steel beater unit as an example. The exchange procedure for the band steel or hammer beam beater unit is very similar.

Removal

- Open the mill as described in Section 5.1.1 or 5.2.1.
- Turn the beater unit such that one of the beater shafts (E2) is positioned at top centre (i.e. a beater row is accessible).
- Remove the pin (E3) on the drive side.
- Pull the beater shafts (E2) out of the beater hubs (E7) slowly, at the same time removing the flat steel beaters (E1) and spacers (E4, E5, E6) one after the other.
- Remove the beaters of the other beater rows in the same way.

Installation

- Insert the beater shafts (E2) into the beater hubs (E7) and thread the flat steel beaters (E1) and spacers (E4, E5, E6) one after the other.
- Insert the pins (E3) into the beater shafts (E2).
- Install the other beater rows in the same way.
- Turn the beater unit over by hand and check the flat steel beaters (E1) for freedom of movement.
- Close the mill as described in Section 5.1.2 or 5.2.2.

189631 273511
189650* 273479

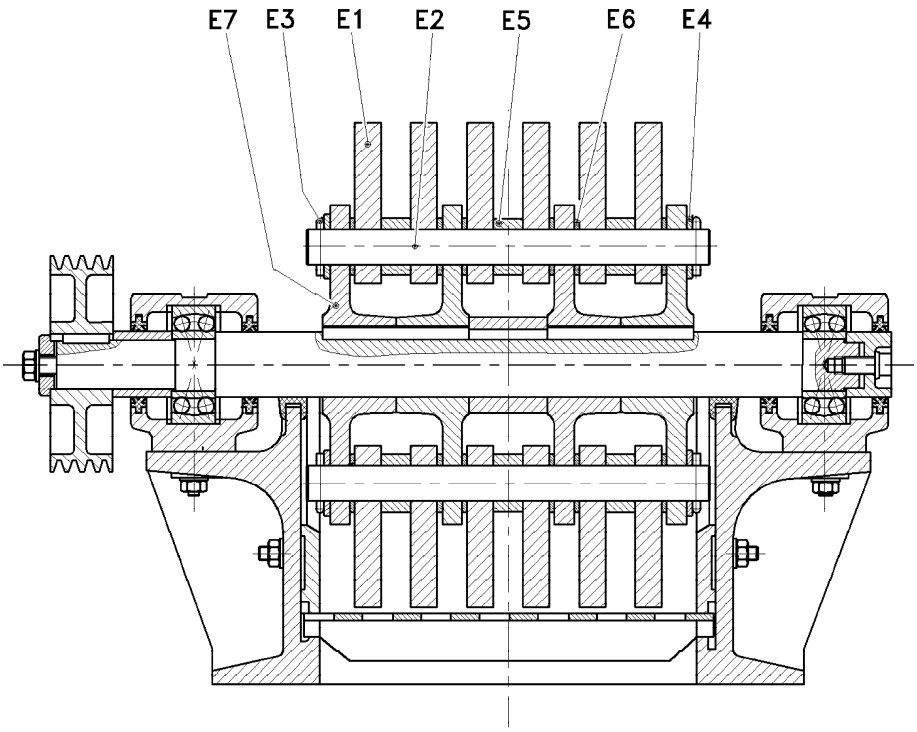

E1	Flat steel beater	E5	Spacer
E2	Beater shaft	E6	Spacer
E3	Pin	E7	Beater hub
E4	Spacer		

Figure 10: Flat steel beater unit

7.5 Exchanging the beater unit, bearing exchange

It can become necessary to exchange the complete beater unit if advanced wear makes it necessary to also exchange the beater unit hub or parts of the rigid beater unit, or if the bearings need exchanging.

Every type of beater unit is supplied with its own shaft (D1) which must also be exchanged along with the unit.

The procedure for removing and installing the beater unit is detailed below using the flat steel beater unit as an example. The exchange procedure for other beater units is identical.

Removal

- Open the mill as described in Section 5.1.1 or 5.2.1.
- Switch off the master switch and secure against restarting.
- Remove the belt guard.
- Remove the narrow-gauge V-belts.
- Undo the screw (D12) and remove the retaining disc (D11).
- Remove the belt pulley (D14) from the shaft (D1).
- Take the feather key (D13) out of the shaft keyway.
- After undoing the bolted connections, remove the top section of the bearing housing (D2, D3).
- Use suitable lifting equipment to remove the complete beater unit with the anti-friction bearings (D4, D5) from the machine. Deposit on a suitable surface.
- Remove the distance bush (D8) from the shaft (D1).
- Remove the cover plate (D9) after undoing the screw (D10).
- Use suitable tools and aids (e.g. bearing extractor) to remove both anti-friction bearings (D4, D5) from the shaft (D1).
- Remove the locking rings (D7) and dual-lipped seals (D6) from the the bearing housings (D2, D3).
- Remove the shaft seals (A7) from the housing bottom section (A1) and the housing top section (A2).

Installation

After parts removal, always use new anti-friction bearings (D4, D5), new dual-lipped seals (D6) and new shaft seals (A7).

Pay attention to the manufacturer's instructions when installing the anti-friction bearings!



NOTICE

Pay attention to utmost cleanliness during assembly!

Dirt in the bearings reduces their service life.

189631 273511
189650* 273479

- Insert the split shaft seals (A7) into the housing bottom section (A1) and the housing top section (A2) and glue in place.
- Insert the locking rings (D7) into the base of the bearing housing (D2).
- Tap both anti-friction bearings (D4, D5) onto the shaft (D1).
- Locate the cover plate (D9) on the end of the shaft (D1) and screw fast with the screw (D10).
- Slide the distance bush (D8) onto the shaft (D1).
- Lightly grease the sealing lips of the dual-lipped seals (D6).
- Locate the dual-lipped seals (D6) around the shaft (D1).
- Use suitable lifting equipment to insert the complete beater unit with shaft (D1) and anti-friction bearings (D4, D5) into the bases of the bearing housings (D2, D3). In doing so, locate the dual-lipped seals (D6) in the grooves such that the parting points of the dual-lipped seals face upwards.
- Check that the anti-friction bearing (D5) – floating bearing – is seated in the centre (axial bearing clearance) of the bearing housing (D3); it may be necessary to refasten the bearing housing (D3).
- Lubrication: Fill the recesses between the rolling elements completely and the spaces in the bearing housings to about half with lubricating grease. See Section 6.1 for details of lubricants.
- Position the top sections of the bearing housings (D2, D3) on the bottom sections and screw fast.
- Insert the feather key (D13) into the shaft keyway.
- Fit the belt pulley (D14) on the shaft (D1).
- Locate the retaining disc (D11), insert the screw (D12) and tighten, thus applying force via the distance bush (D8) and inner race of the bearing (D4) to the belt pulley (D14) and thus pressing it against the collar of the shaft.
- Fit the V-belts and tension them in accordance with the appended technical instructions "Narrow-gauge V-belts" – TA 001/1.
- Replace the belt guard.
- Switch on the master switch.
- Close the machine as described in Section 5.1.2 or 5.2.2.
- Carry out a test run for at least 20 minutes.

189631 273511
189650* 273479

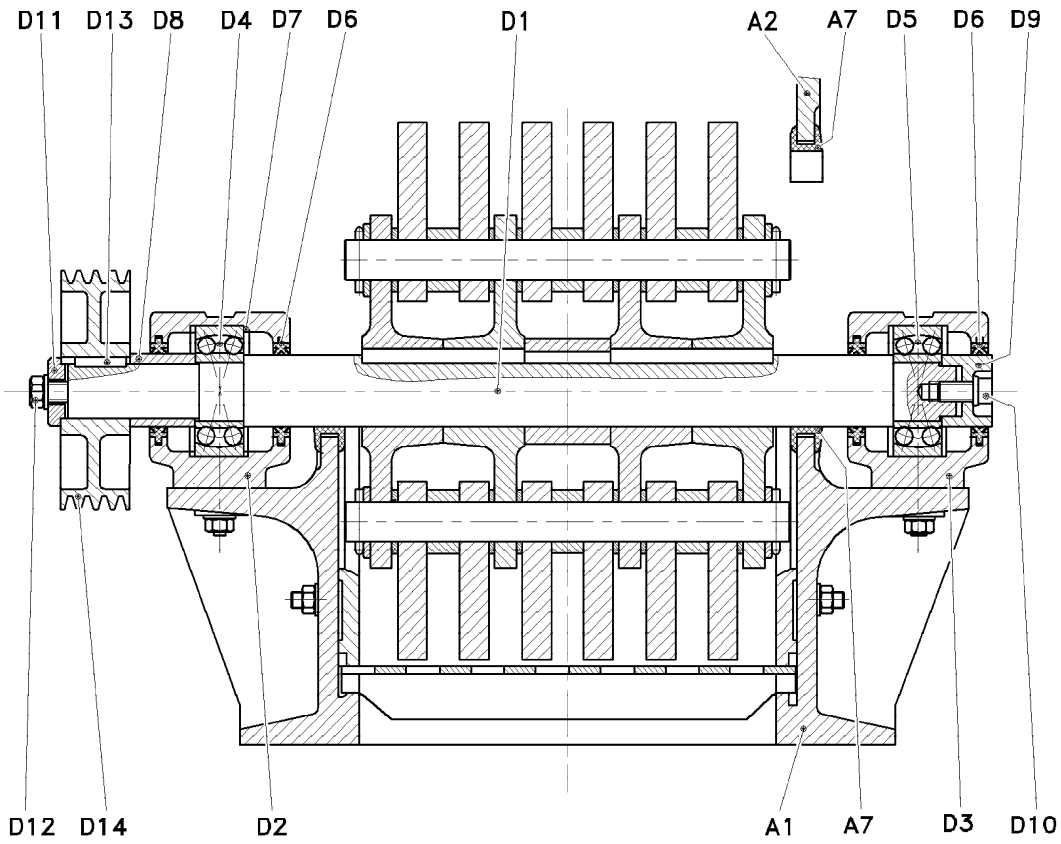

A1	Housing bottom section	D7	Locking ring
A7	Shaft seals	D8	Distance bush
D1	Shaft	D9	Cover plate
D2	Bearing housing	D10	Screw
D3	Bearing housing	D11	Retaining disc
D4	Bearing	D12	Screw
D5	Bearing	D13	Feather key
D6	Dual-lipped seals	D14	Belt pulley

Figure 11: Mill, beater unit, bearing

7.6 Dismantling the removed beater unit



NOTICE

The beaters can be used on both sides; once one side is worn, simply turn the beater over and use the opposite side.

The service life of the beaters can be prolonged by having them professionally hardfaced before wear starts to set in.

When remounting the beaters, make sure their weight is identical!

If a single beater is to be exchanged, then either the beater located diametrically opposite it must also be replaced, or its weight must be adjusted to match that of the new beater.

Pay attention to the set numbering (same weight).

Beaters with the same number (same weight) must be installed on the same beater shaft.

Although band steel beaters are not numbered, each set is supplied in a separate bundle.

Beaters belonging to different sets may not be mixed with each other.

Refer to Section 7.4 for details of removal and installation.

7.6.1 Flat steel beater unit (E)

Dismantling

- Remove the pin (E3).
- Pull the beater shafts (E2) out of the beater hubs (E7) slowly, at the same time removing the flat steel beaters (E1) and spacers (E4, E5, E6) one after the other.
- Pull the beater hubs (E7) off the shaft (D1) from both sides.
- If necessary, remove the feather keys (E8) from the shaft (D1) and remove the distance bush (E9).

Assembly

- Fit the distance bush (E9) on the shaft (D1).
- Insert the feather keys (E8) to the left and the right of the distance bush (E9) into the shaft keyway. The two feather keys (E8) clamp the distance bush (E9) and later the beater unit securely on the shaft (D1) in axial direction.
- Fit the beater hubs (E7) on the shaft (D1) from both sides.
- Insert the beater shafts (E2) into the beater hubs (E7), at the same time threading the flat steel beaters (E1) and spacers (E4, E5, E6) on.
- Insert the pin(s) (E3) into the beater shafts (E2).

189631 273511
189650* 273479

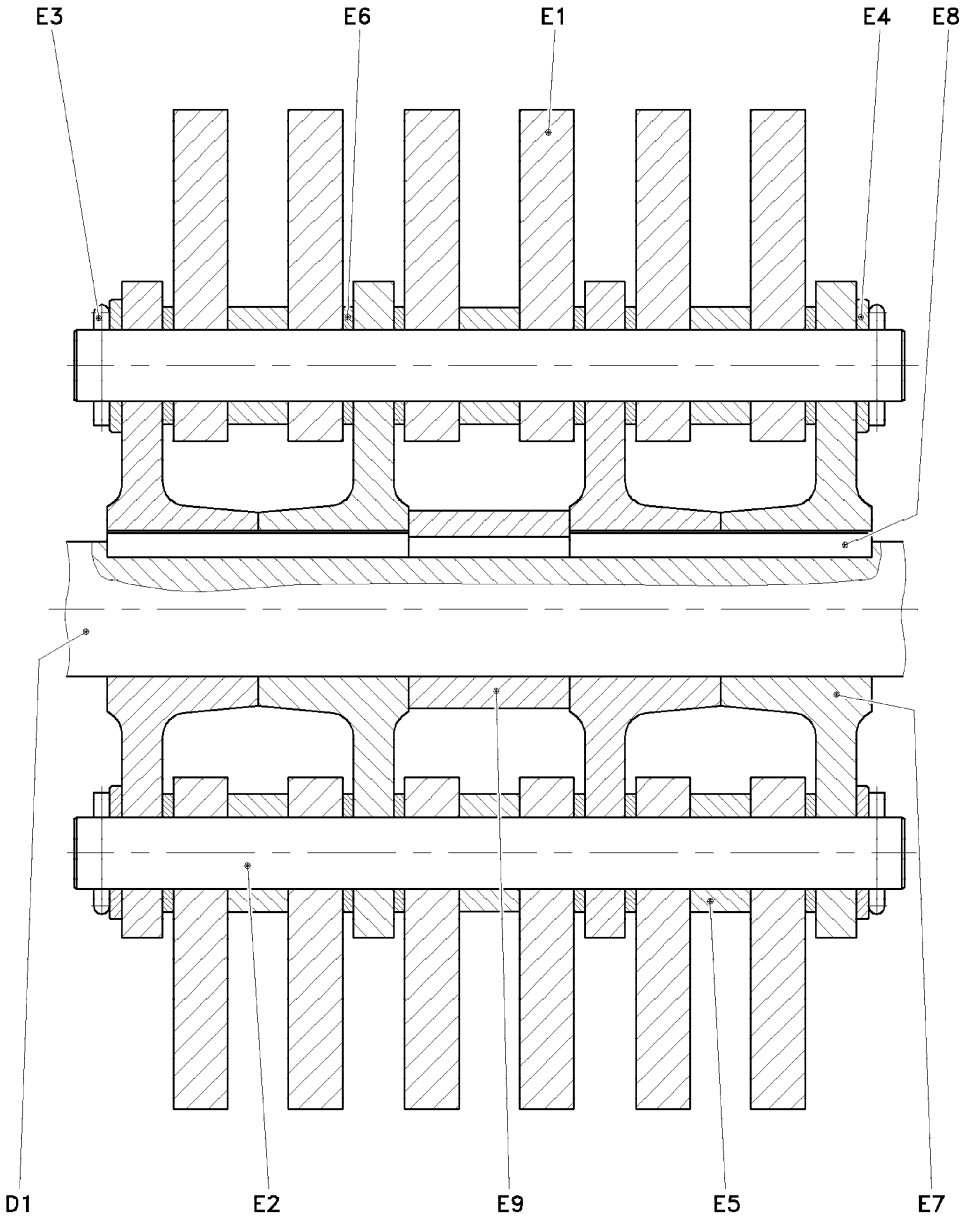

D1 Shaft
E1 Flat steel beater
E2 Beater shaft
E3 Pin
E4 Spacer
E5 Spacer
E6 Spacer
E7 Beater hub
E8 Feather key
E9 Distance bush

Figure 12: Flat steel beater unit

189631 273511
189650* 273479

7.6.2 Band steel beater unit (F)

Dismantling

- Remove the pin (F3).
- Pull the beater shafts (F2) out of the beater hubs (F7) slowly, at the same time removing the band steel beaters (F1) and spacers (F4, F5, F6) one after the other.
- Pull the beater hubs (F7) off the shaft (D1) from both sides.
- If necessary, remove the feather keys (F8) from the shaft (D1) and remove the distance bush (F9).

Assembly

- Fit the distance bush (F9) on the shaft (D1).
- Insert the feather keys (F8) to the left and the right of the distance bush (F9) into the shaft keyway. The two feather keys (F8) clamp the distance bush (F9) and later the beater unit securely on the shaft (D1) in axial direction.
- Fit the beater hubs (F7) on the shaft (D1) from both sides.
- Insert the beater shafts (F2) into the beater hubs (F7), at the same time threading the band steel beaters (F1) and spacers (F4, F5, F6) on.
- Insert the pin(s) (F3) into the beater shafts (F2).

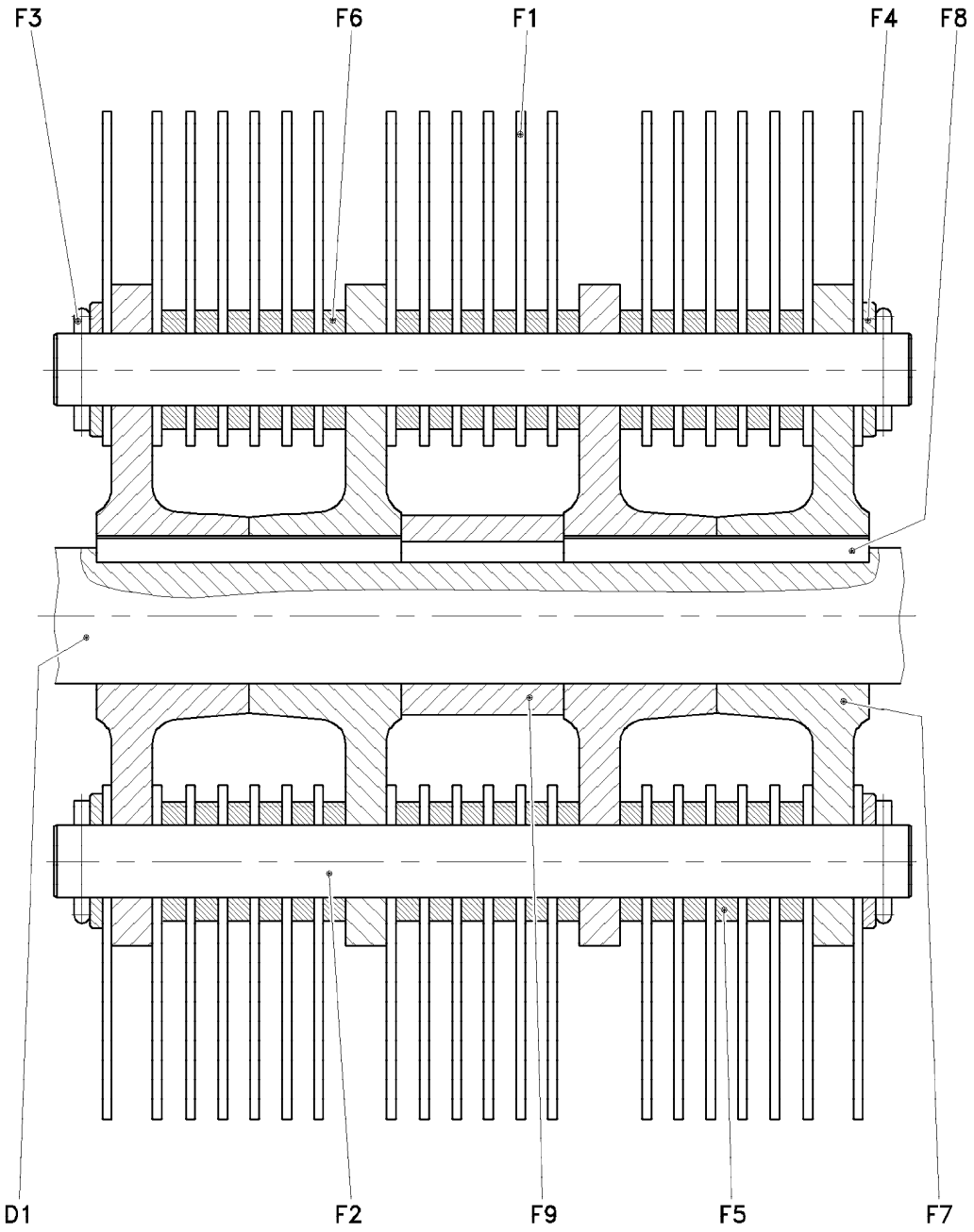

D1	Shaft	F4	Spacer	F8	Feather key
F1	Band steel beater	F5	Spacer	F9	Distance bush
F2	Beater shaft	F6	Spacer		
F3	Pin	F7	Beater hub		

Figure 13: Band steel beater unit

189631 273511
189650* 273479

7.6.3 Hammer beam beater unit (F)

Dismantling

- Remove the pin (G3).
- Pull the beater shafts (G2) out of the beater hubs (G7) slowly, at the same time removing the hammer beam beaters (G1), spacers (G4, G5) and distance bush (G6) one after the other.
- Pull the beater hubs (G7) off the shaft (D1) from both sides.
- If necessary, remove the feather keys (G8) from the shaft (D1) and remove the distance bush (G9).

Assembly

- Fit the distance bush (G9) on the shaft (D1).
- Insert the feather keys (G8) to the left and the right of the distance bush (G9) into the shaft keyway. The two feather keys (G8) clamp the distance bush (G9) and later the beater unit securely on the shaft (D1) in axial direction.
- Fit the beater hubs (G7) on the shaft (D1) from both sides.
- Insert the beater shafts (G2) into the beater hubs (G7), at the same time threading the hammer beam beaters (G1), spacers (G4, G5) and distance bush (G6) on.
- Insert the pin(s) (G3) into the beater shafts (G2).

189631 273511
189650* 273479

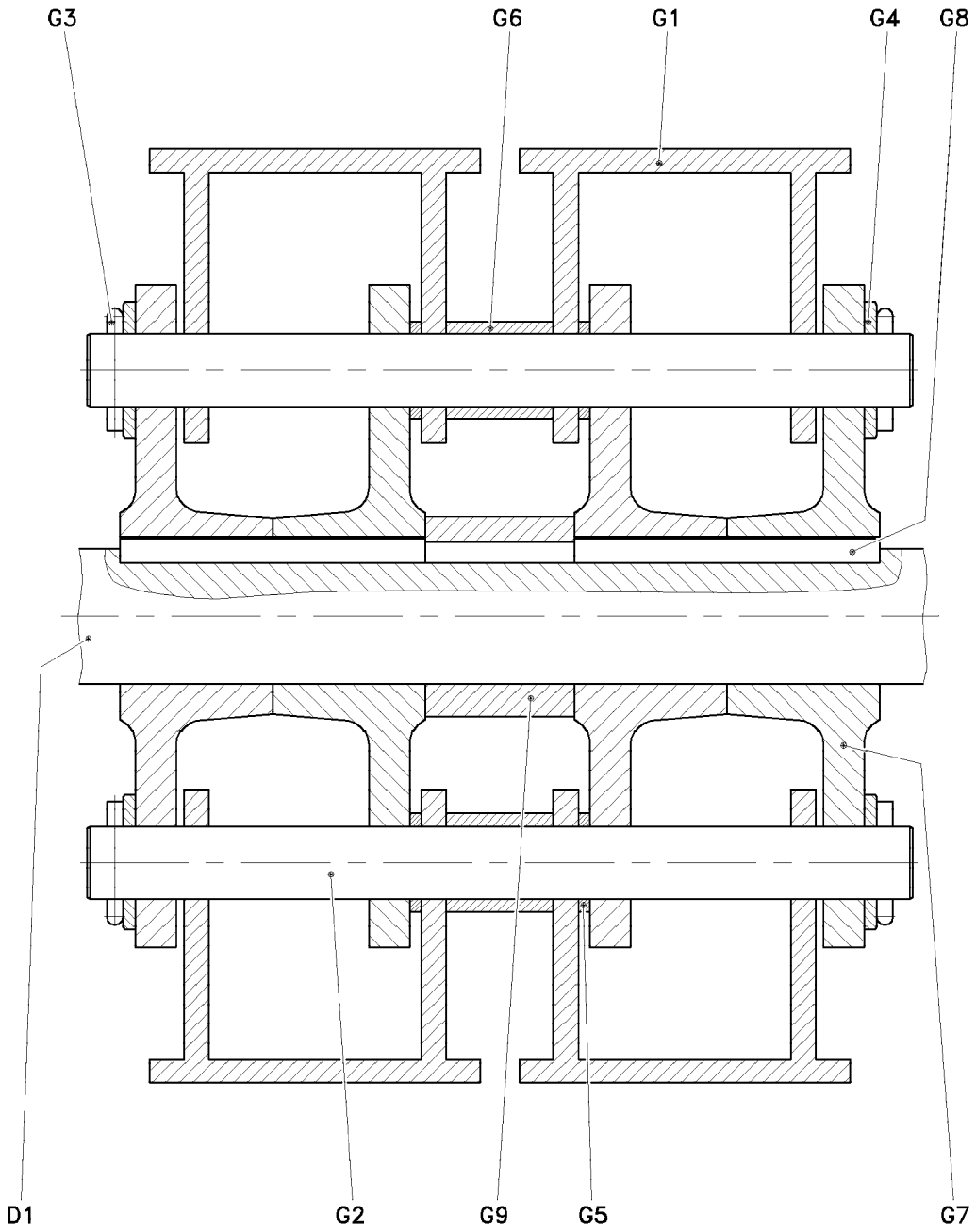

D1	Shaft	G5	Spacer
G1	Hammer beam beater	G6	Distance bush
G2	Beater shaft	G7	Beater hub
G3	Pin	G8	Feather key
G4	Spacer	G9	Distance bush

Figure 14: Hammer beam beater unit

189631 273511
189650* 273479

7.6.4 Rigid beater unit (H)

Dismantling

- Undo the nuts (H3) and remove along with the lock washers (H4).
- Remove the tension bolts (H2).
- Pull the beaters (H1) off the shaft (D1) to both sides.
- If necessary, remove the feather keys (H5) from the shaft keyway and remove the spacer (H6).

Assembly

- Locate the spacer (H6) on the shaft (D1).
- Insert the feather keys (H5) to the left and right of the spacer (H6) into the shaft keyway. The two feather keys (H5) clamp the spacer (H6) and later the beater unit securely on the shaft (D1) in axial direction.
- Push the beaters (H1) on from both sides. Turn each beater (G1) through 90° and locate such that they cross alternately.
- Push the tension bolts (H2) through.
- Insert the nuts (H3) with the lock washers (H4) and tighten.

189631 273511
189650* 273479

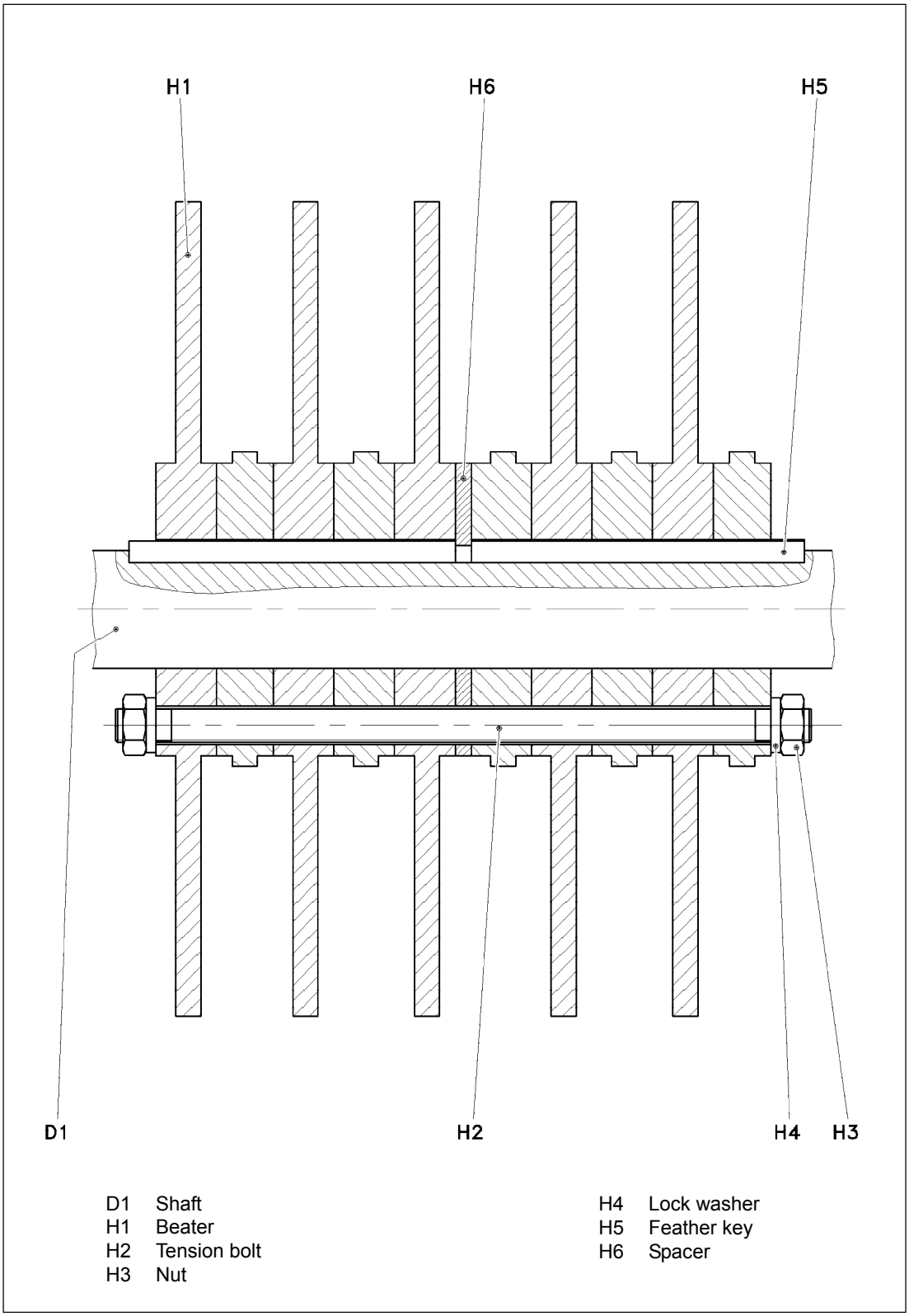

D1 Shaft
H1 Beater
H2 Tension bolt
H3 Nut
H4 Lock washer
H5 Feather key
H6 Spacer

Figure 15: Rigid beater unit

189631 273511
189650* 273479

7.7 Exchanging the wear plates (A4)

Removal

- Remove the screen (B1) as per Section 7.1 or the bar grate (C) as per Section 7.2.
- Remove the beater unit (E / F / G / H) as per Section 7.4, or
- release the bolted connections (D20) and use lifting equipment to lift the beater unit complete with bearings out of the housing bottom section (A1).
- Undo the nuts (A4.2) and remove together with the countersunk screws (A4.1) and washers (A4.3).
- Lift the wear plates (A4) out of the housing bottom section (A1).

Installation

- Locate the wear plates (A4) in the housing bottom section (A1).
- Insert the countersunk screws (A4.1), locate the washers (A4.3) and nuts (A4.2). Tighten the nuts (A4.2), thus securing the wear plates (A4) in the housing bottom section (A1).
- Replace the beater unit (E / F / G / H) as per Section 7.4, or use lifting equipment to lift the beater unit complete with bearings into the housing bottom section (A1). Secure in place with the bolted connections (D20). If necessary, adjust the axial bearing clearance of the floating bearing, or
- install the beater unit as per Section 7.4.
- Replace the screen (B1) as per Section 7.1 or the bar grate (C) as per Section 7.2.

189631 273511
189650* 273479

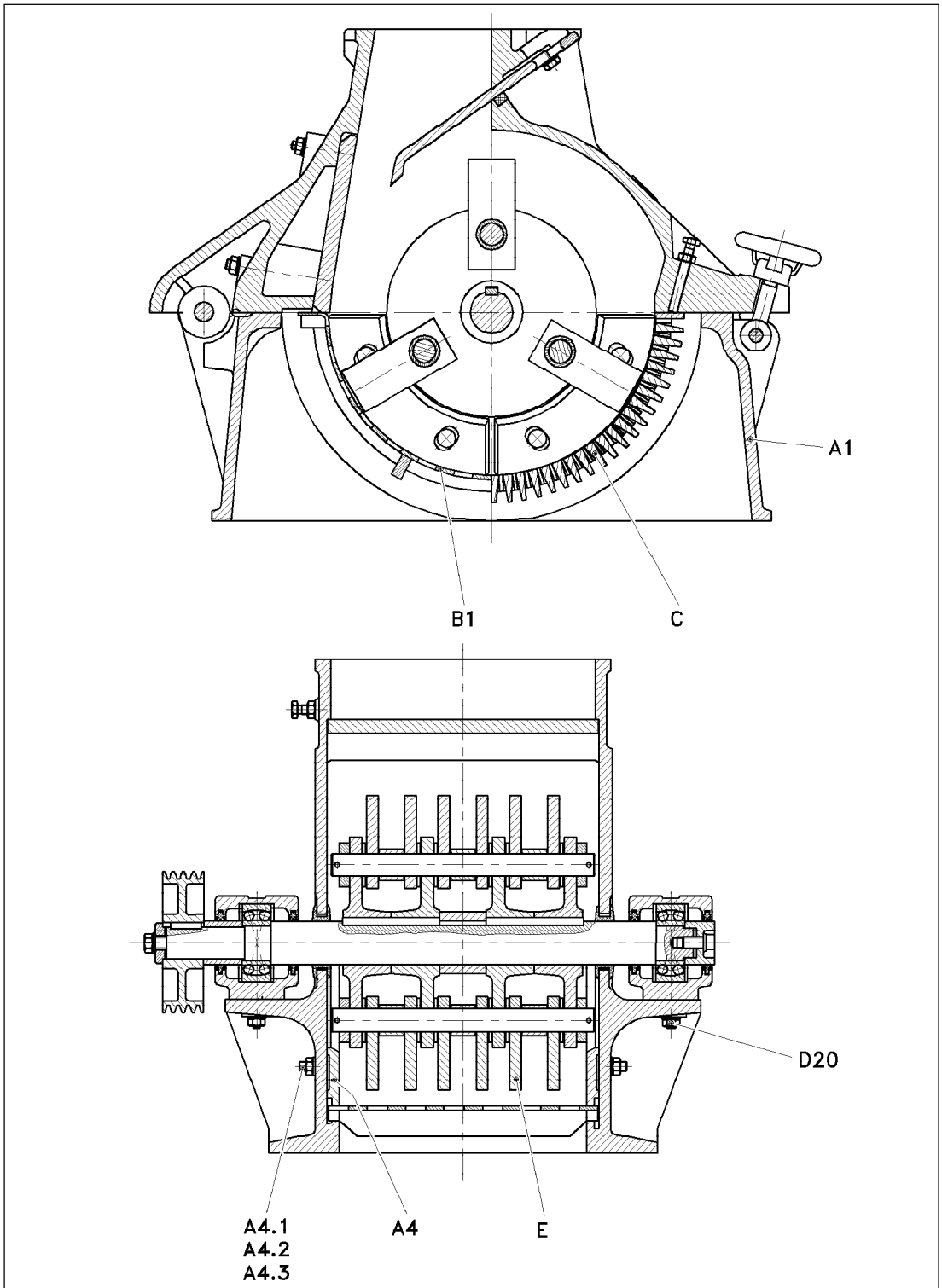

A1	Housing bottom section	B1	Screen
A4	Wear plate	C	Bar grate
A4.1	Countersunk screw	D20	Bolted connection
A4.2	Nut	E	Flat steel beater unit
A4.3	Washer		

Figure 16: Mill complete with installed flat steel beater unit (as an example)

189631 273511
189650* 273479

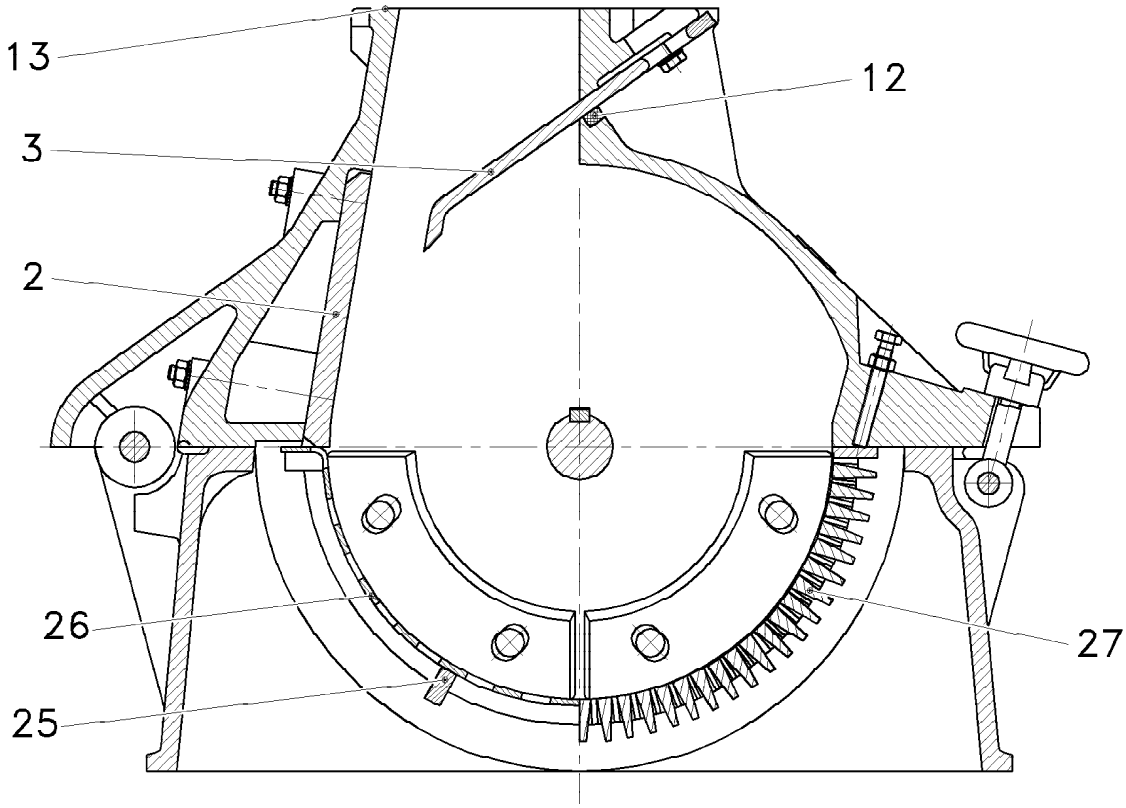

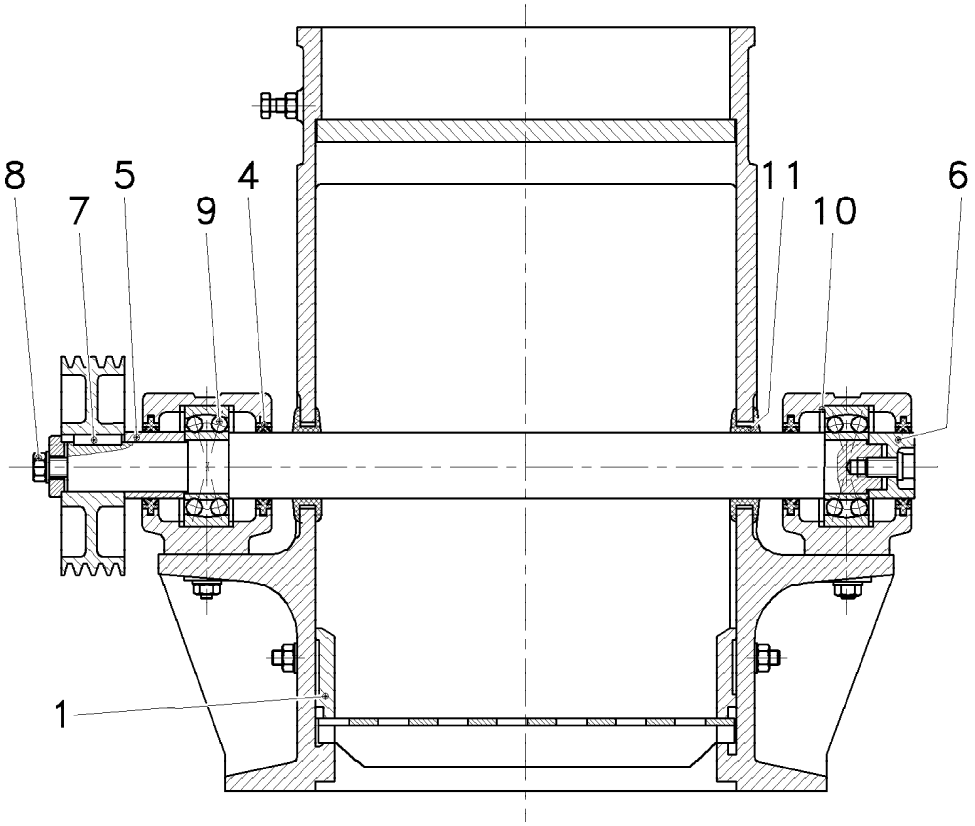

Bei Bestellung von Ersatzteilen
Maschinentyp, Maschinen-Nummer und Bestell-Nummer angeben.

When ordering spare parts please specify
machine type, serial number and order number.

Si vous commandez des pièces de rechange, veuillez bien indiquer
le type de machine, le numéro de série ainsi que, le numéro de la commande.

Ersatzteilzeichnung
Spare parts drawing
Voir schéma des pièces de rechange

EZ 1223 - 26

HOSOKAWA ALPINE Aktiengesellschaft

Blatt-Nr. 1

Blattzahl 5

09.02

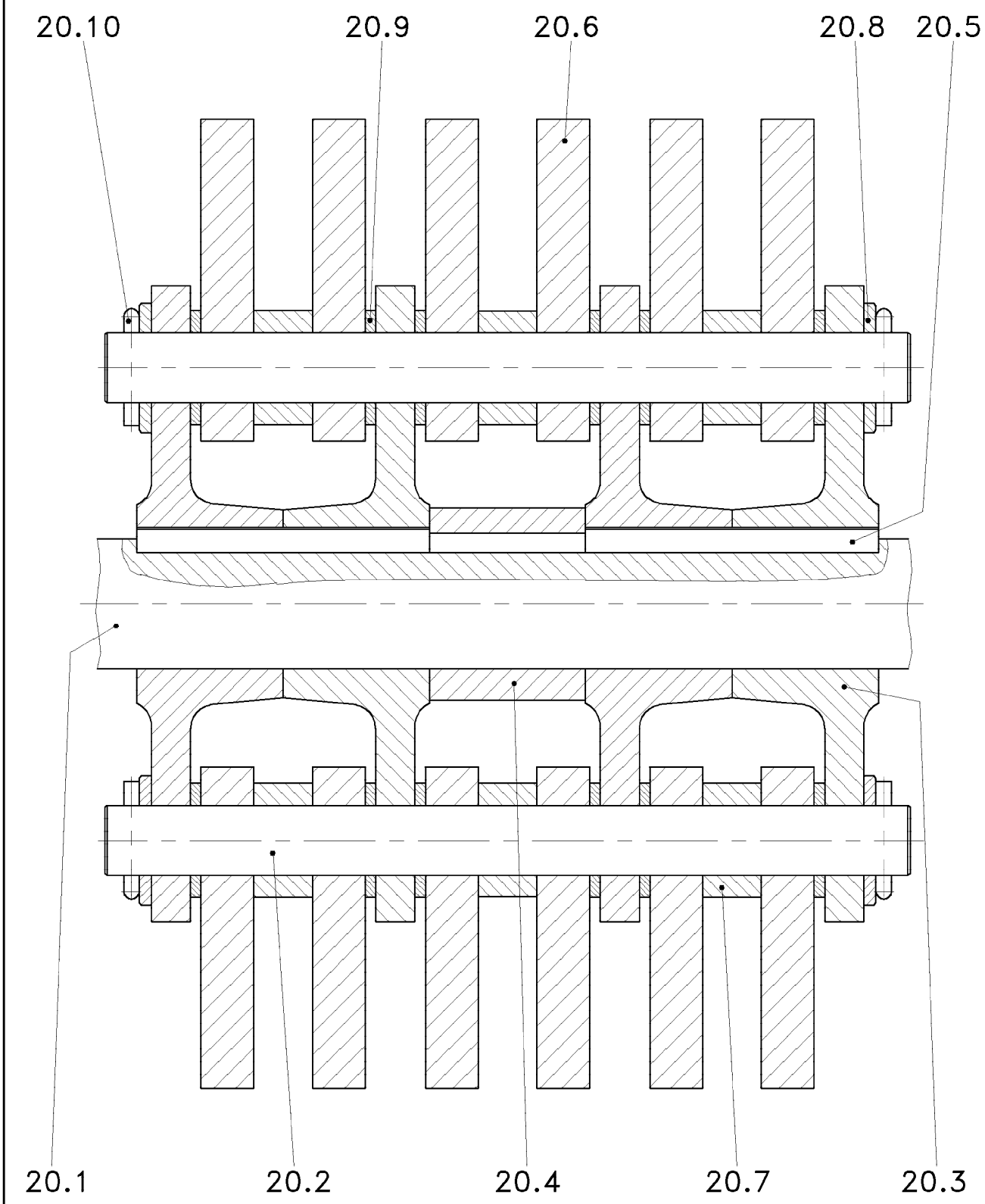

Bei Bestellung von Ersatzteilen
Maschinentyp, Maschinen-Nummer und Bestell-Nummer angeben.

When ordering spare parts please specify
machine type, serial number and order number.

Si vous commandez des pièces de rechange, veuillez bien indiquer
le type de machine, le numéro de série ainsi que, le numéro de la commande.

Ersatzteilzeichnung
Spare parts drawing
Voir schéma des pièces de rechange

EZ 1223 - 26

HOSOKAWA ALPINE Aktiengesellschaft

Blatt-Nr. 2

Blattzahl 5

09.02

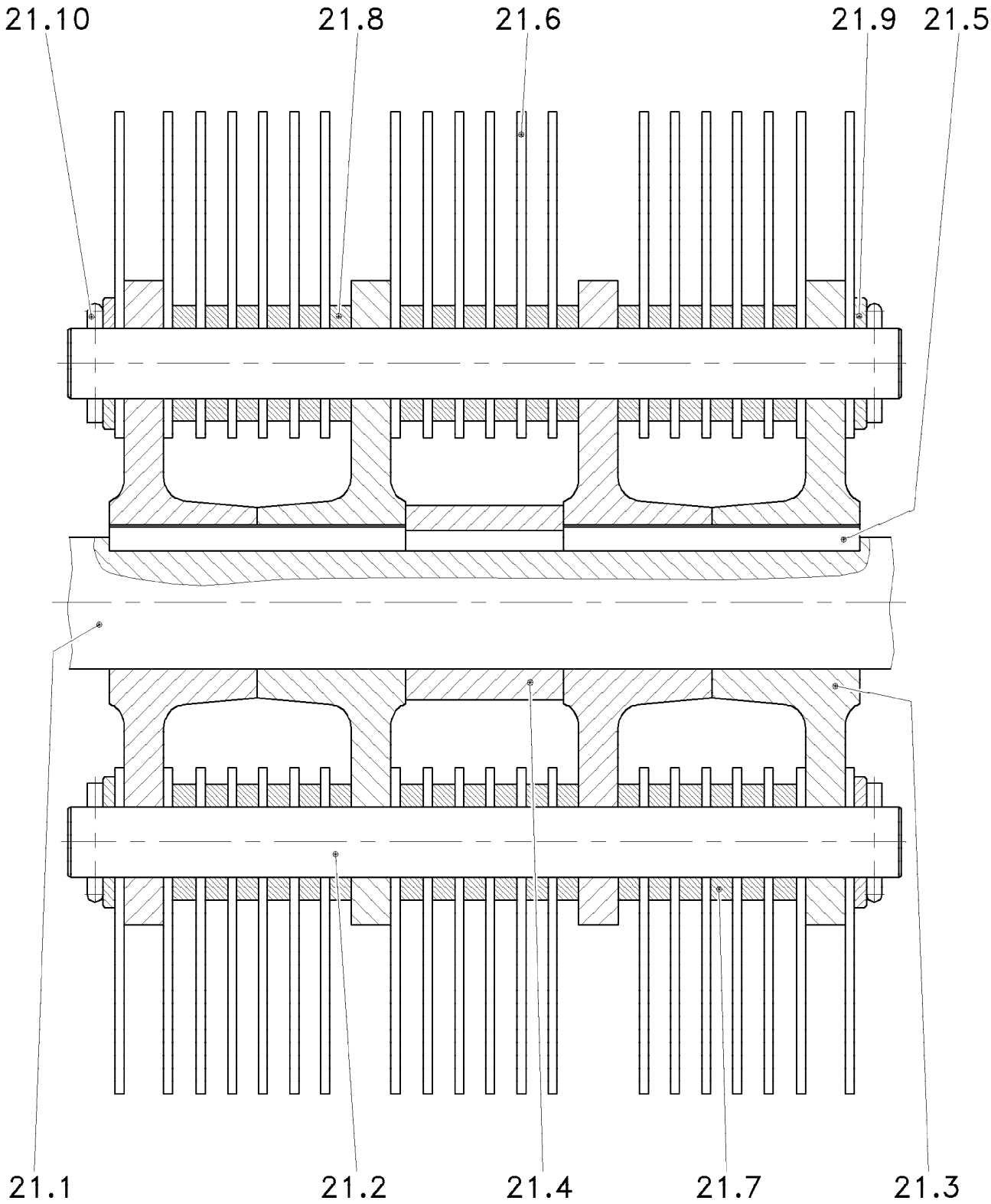

Bei Bestellung von Ersatzteilen
Maschinentyp, Maschinen-Nummer und Bestell-Nummer angeben.

When ordering spare parts please specify
machine type, serial number and order number.

Si vous commandez des pièces de rechange, veuillez bien indiquer
le type de machine, le numéro de série ainsi que, le numéro de la commande.

Ersatzteilzeichnung
Spare parts drawing
Voir schéma des pièces de rechange

EZ 1223 - 26

HOSOKAWA ALPINE Aktiengesellschaft

Blatt-Nr. 3

Blattzahl 5

09.02

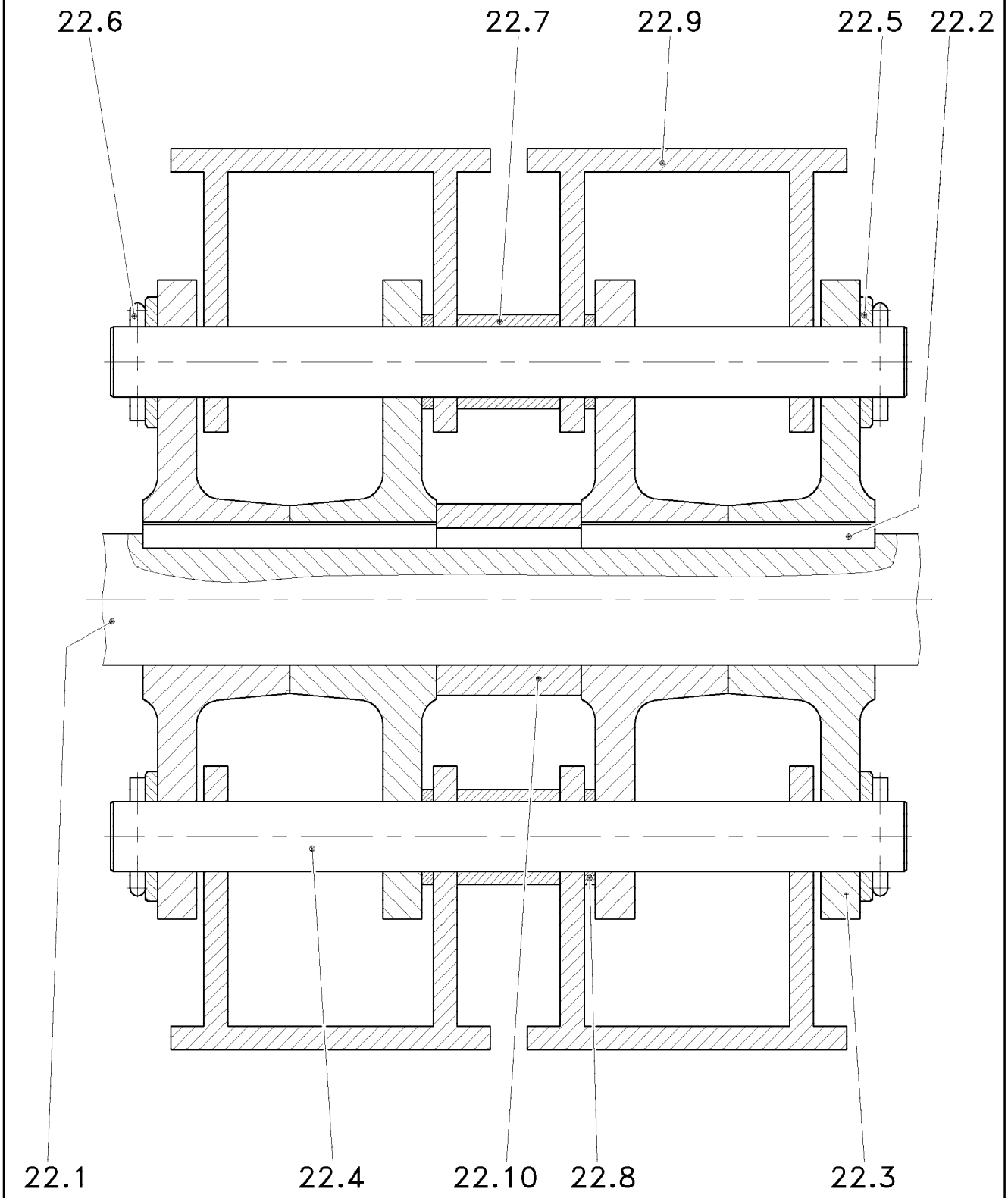

Bei Bestellung von Ersatzteilen
Maschinentyp, Maschinen-Nummer und Bestell-Nummer angeben.

When ordering spare parts please specify
machine type, serial number and order number.

Si vous commandez des pièces de rechange, veuillez bien indiquer
le type de machine, le numéro de série ainsi que, le numéro de la commande.

Ersatzteilzeichnung
Spare parts drawing
Voir schéma des pièces de rechange

EZ 1223 - 26

HOSOKAWA MICRON

HOSOKAWA ALPINE Aktiengesellschaft

Blatt-Nr. 4

Blattzahl 5

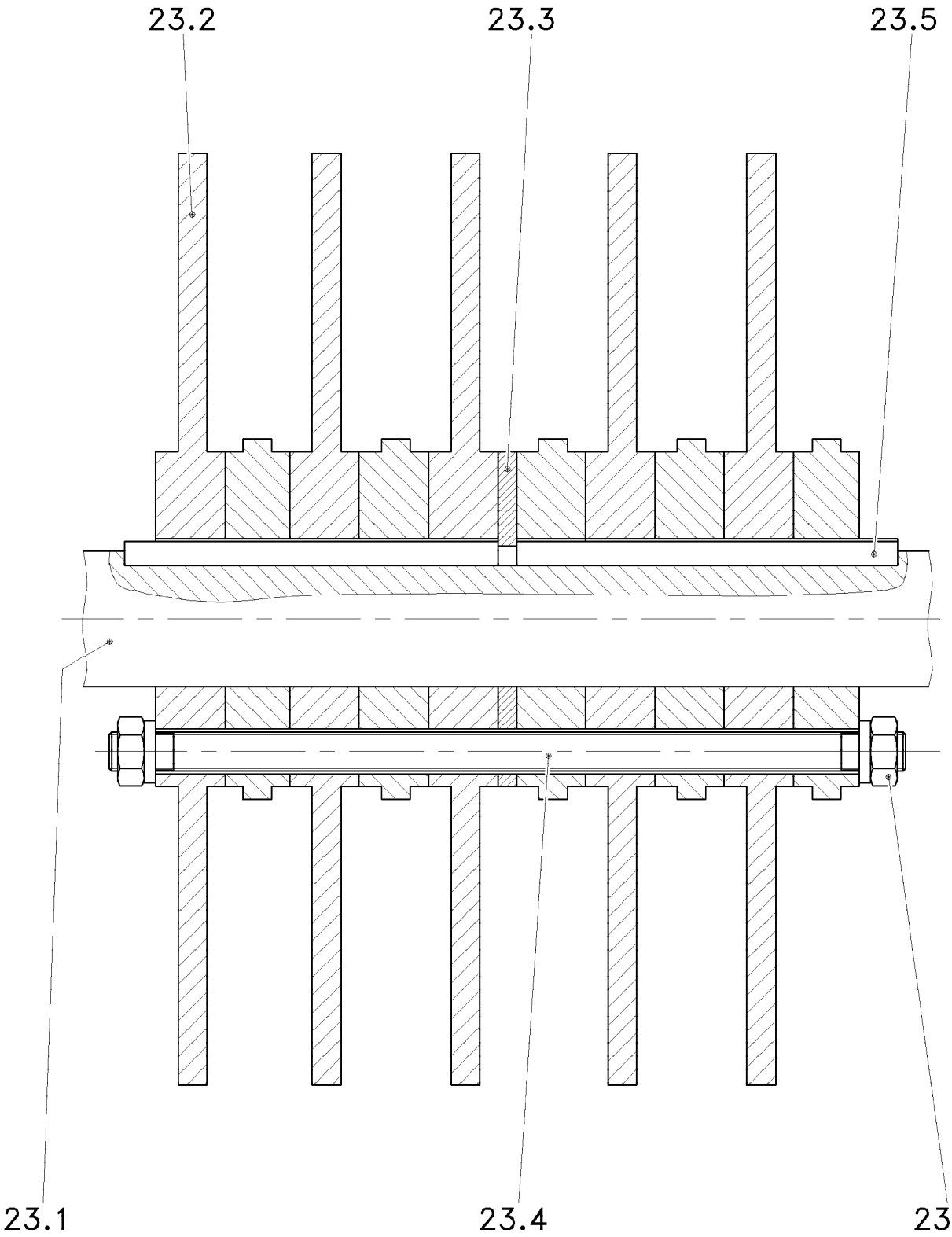

Bei Bestellung von Ersatzteilen
Maschinentyp, Maschinen-Nummer und Bestell-Nummer angeben.

When ordering spare parts please specify
machine type, serial number and order number.

Si vous commandez des pièces de rechange, veuillez bien indiquer
le type de machine, le numéro de série ainsi que, le numéro de la commande.

Ersatzteilzeichnung
Spare parts drawing
Voir schéma des pièces de rechange

EZ 1223 - 26

HOSOKAWA ALPINE Aktiengesellschaft

Blatt-Nr. 5

Blattzahl 5

Item	Order-No.	Additional information	Standard p.	Material	uant.
1	309095	Armour plate set with screws			1
2	309097	Impact plate with screws			1
3	309099	Slide plate with screws			1
4	009248	Shaft seal D 55			4
5	189705	Distance bushing			1
6	300667	Cover disc with screw			1
7	009544	Feather key A 13x8x40	DIN 6885	C 45 K	1
8	300669	Retaining disc with screw			1
9	004377	Self-aligning ball bearing 2309	DIN 630		2
10	189646	Fixed point ring			2
11	189648	Seal DH 309		NBR	4
12	006633	Wool felt 15x15x350	DIN 61200	TD 9	1
13	044945	Seal material-inflow		Legu	1
20	**189629**	**Flat-steel beater unit -complete-**			**1**
20.1	189624	Shaft			1
20.2	081125	Beater bolt			3
20.3	081126	Beater hub			4
20.4	081127	Distance bush			1
20.5	010355	Feather key 16x10x125			2
20.6	081128	Flat steel beater			18
20.7	081129	Distance ring 40/31x32			9
20.8	095909	Disc B30	ISO 8738	St Zn	6
20.9	081144	Distance ring 40/31x6.5		St	36
20.10	009181	Split-pin 8x50	ISO 1234	St	6
21		-			
22		-			
23		-			
24		-			
25		-			
26		-			
27	**431419**	**Bar grate gap width 1 1.5 2 3 4 5 mm -**		St	**1**
27.1	176721	Grate bar			50
27.2	080410	Tensioning bar			2
27.3	081464	Intermediate layer 1 mm		St	50
	193185	Intermediate layer 1.5 mm		St	50
	081465	Intermediate layer 2 mm		St	50

Hammer Mill
40/32 Ha
St

Spare parts list
EL 1223-26.03

See Spare parts drawing
EZ 1223-26

189631

Item	Order-No.	Additional information	Standard p.	Material	uant.
	081466	Intermediate layer 4 mm		St	50

Hammer Mill
40/32 Ha
St

Spare parts list
EL 1223-26.03

See Spare parts drawing
EZ 1223-26

HOSOKAWA ALPINE Aktiengesellschaft

189631

07.13 FIM