IBARMIA.
your machine-tool point

BLUECOMPETENCE
Alliance Member

GANADOR
"Máquinas-Herramienta que trabajan por arranque o deformación"
PREMIO INNOVACIÓN Máquina Herramienta
10ª edición

Moving column
Machining Centres

ZVH MULTIPROCES SERIES Offer



ZVH 60/L6000 MULTIPROCESS

With digital control FANUC 31i-B for milling + turning

Customer

Date: 13/10/2015

Offer: DOM 8183 C

IBARMIA INNOVATEK, S.L.U.
Pol. Ind. Etxesaga, s/n
Apdo. 35
20720 Azkoitia
(Gipuzkoa)Spain

T +34 943 857 130-000
F +34 943 857 005
innovatek@ibarmia.com
ibarmia.com

INDEX

Technical description of standard machine.

1.01 Concept
1.02 Construction
1.03 Fixed table
1.04 Ergonomics
1.05 Tilting head
1.06 Main spindle
1.07 ATC
1.08 Lineal guides and ball screws
1.09 Measuring system
1.10 Automatic central lubrication system
1.11 Chip evacuation
1.12 External coolant device
1.13 Standard protection
1.14 Machine levelling elements
1.15 Cooled electrical cabinet
1.16 CnC

Description of the offer.

2.01 Description of standard model
2.02 Standard model specifications
2.03 Options
2.04 Documentation

Price and sales conditions.

3.01 Summary of offer
3.02 General conditions

Technical description of the standard machine

1.01 Concept

High productivity **IBARMIA** machines with moving column and fixed table are designed for companies with high level machining requirements. These machines can be used in two different ways, optimizing the return on investment.

- Machining of large pieces along the entire table (extra large pieces exceeding the longitudinal axis can also be machined using the windows on each side of the machine).

- NSM (Non-Stop Machining) pendulum work system for the production of medium to large batches of pieces, avoiding dead times spent in loading/unloading of parts.

The series **ZVH** adds the advantage of a **continuous tilting head** that considerably increases the possibilities offered by classic 3 axes machines, enabling the machining of parts in fewer set ups.

Adding (optional) rotary axes to the working area allows machining in 5 axes of complex parts.

The ZVH MULTIPROCESS series integrates two metal removal processes, milling and turning (with **vertical and/or horizontal turning plate**), allowing the machining of the piece in only one clamping.

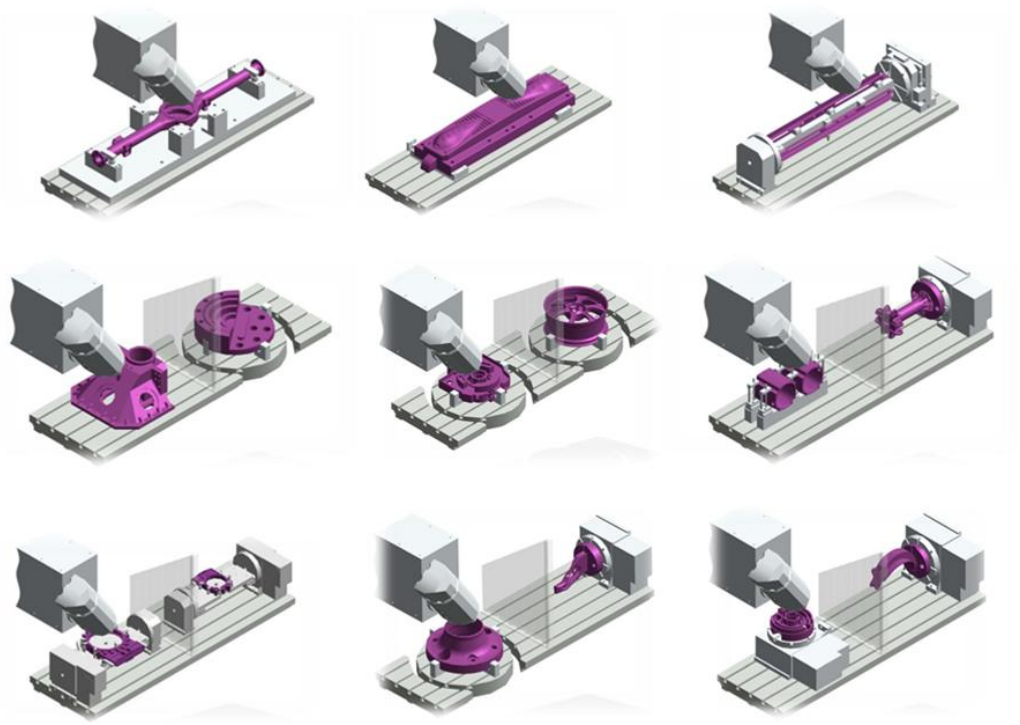

1.02 Construction

The solid steel machine bed, heavily ribbed and stress relieved in a furnace is a structure produced in two pieces (**duo block**). The inclined sides provide an optimum chip evacuation on the front and back of the working table.

Moving elements: X-axis carriage, column and spindle headstock are also heavily ribbed, steel welded and stress relieved.

The frame of the electro-spindle is in normalised cast iron GG-25

Those elements are very rigid to absorb loads and forces; they are designed by computer using finite element analysis. (FEA)

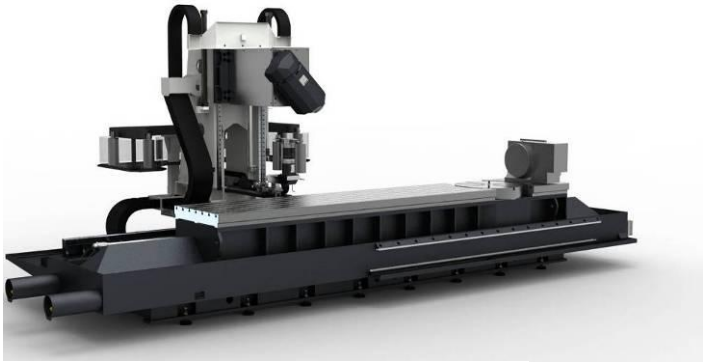

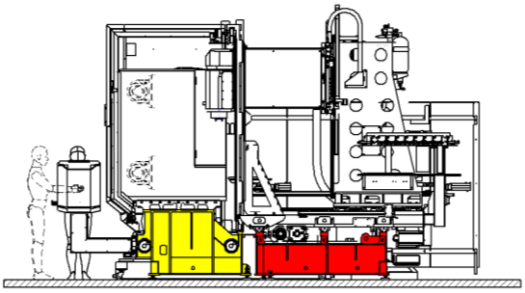

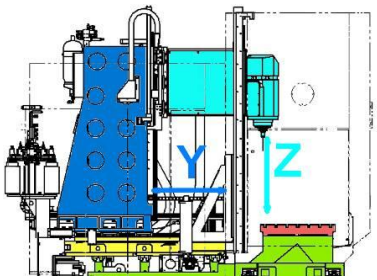

The carriage moves longitudinally along well spaced lineal guides on the back of the machine bed (X axis). The column, while sitting on the carriage, moves transversally for the Y axis. On the front side of the column, the headstock moves vertically for the Z axis. The Z axis movement is compensated hydraulically by two cylinders in the head in an independent circuit.

This **fixed headstock** construction (constant distance between the guides on the Z axis and the spindle nose) allows constant accuracy at every point of the Y and Z axis.

The tool magazine is sitting on the back side of the carriage for a balanced distribution of weight.

The **continuous tilting head** (360,000 positions) is driven by a torque motor that allows rapid and precise movement. A powerful hydraulic clamp is activated when it is positioned at one fixed point.



Working together with a NC rotary table (optional) allows machining in 5 axes continuously or machining 5 faces in only one clamping. The rotary table can be either

integrated in the fixed table (pic) or sitting on it as an added element.

1.03 Working table

The **static working table** is made in a GG25 iron casting stabilized in a furnace and bolted on the front size of the bed, it is provided with longitudinal T slots.

In addition to the ergonomic advantages of this construction, it also allows loading heavier work pieces that stay fixed during the machining process.

It is possible to install optionally, vertical and/or horizontal rotary axes that allow continuous 5 axes machining and machining of 5 faces in one set up.

The rotary tables can also be integrated in the machine bed at the same level as the fixed working table, on request.

1.04 Ergonomics

The great advantage of the "moving column and fixed table" concept is enhanced by the elements **IBARMIA** adds to the standard equipment of the machines. Such as:

- CNC control panel longitudinally movable (fixed and rotatory on L1600 models) to the center of the table.
- Ergonomic access to the working area
- Illumination of the working area
- Integral guarding with roof; Physical and acoustic protection for the operator
- Access for loading/unloading of pieces by crane
- Doors open beyond the X axis stroke
- Loading of extra long pieces through the side windows

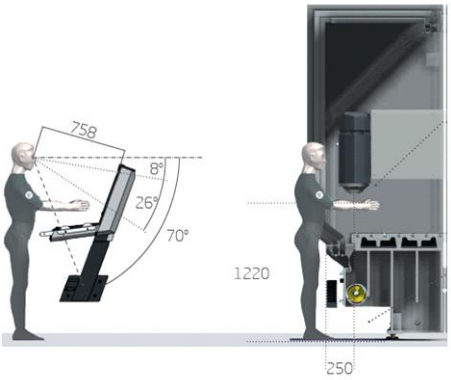

1.05 Tilting head

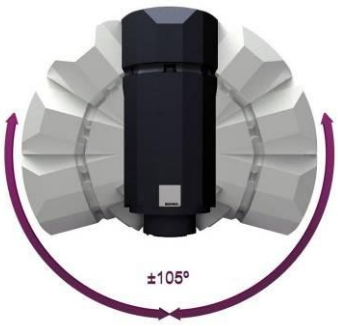

The **continuous tilting head** (360.000 positions) is driven by a torque motor that allows rapid and precise movement. It is installed directly on the rotating axis to avoid backlash.

When the head is positioned on one fixed point, a powerful hydraulic clamp is activated.

The positioning is controlled by an encoder installed directly on the rotating axis.

Refrigeration by liquid coolant removes heat from the torque motor.

- Tilting range	± 105º
- Positioning accuracy:	± 5"
- Turning torque S1:	744 Nm
- Turning torque peak value:	1.259 Nm

- Clamping force: 6000 Nm

1.06 Main spindle

The **ZVH MULTIPROCESS** Series incorporates high dynamics and high torque electro-spindles of prestigious manufacturers**.** The motor is attached directly to the spindle, avoiding transmissions and kinematic chains. Tool blocking for turning mode is made by a hydraulic system on the spindle nose.

The heat generated is dissipated by using a liquid coolant circuit and an external refrigeration device.

Taper of tool holder:

HSK A-100 HSK A-100 DIN 69893



Electro-spindle technology:

Lower range –Star connection

-Power in service S1 100%:	48 kW
-Power in service S6 30%:	71 kW
-Total available power:	1.500 rpm
-Torque in service S1 100%:	300 Nm
-Torque in service S6 30%:	452 Nm

High range – Triangle connection

Power in service (S1 100%):	74 kW
Power in service (S6 40%):	84 kW
Available power from (rpm):	4.000 rpm
Torque in service (S1 100%):	177 Nm
Torque in service (S6 40%):	200 Nm
Maximal rotation speed:	12.000 rpm

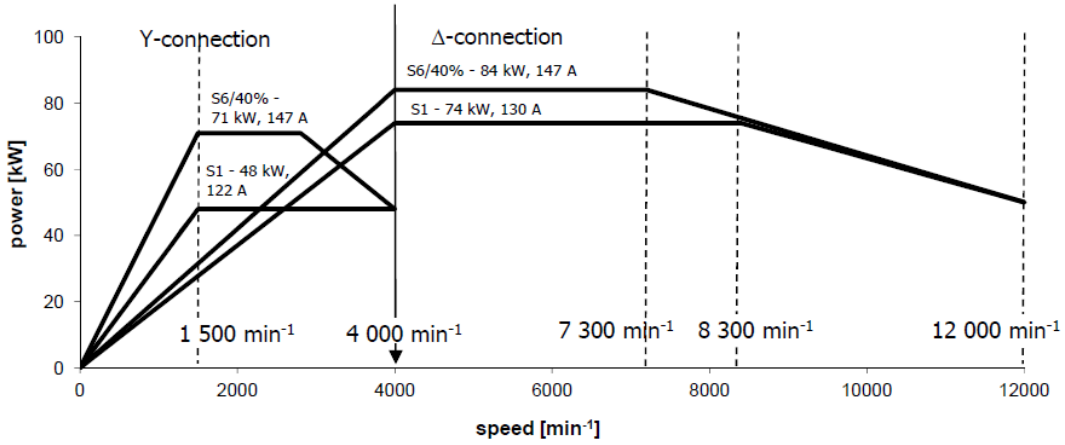

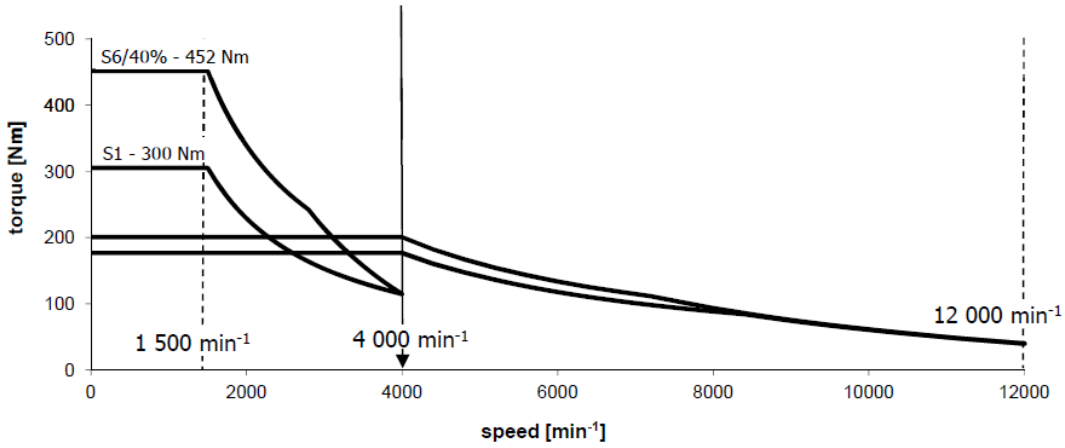

- Spindle cooling : Water
- Bearing lubrification : Air - oil

Automatic hydraulic clamping/unclamping of tools

There is a button on the front side of the head for manual clamping/unclamping of tools by the operator from the working area.

A clamping collet and Belleville spring packet provides fail safe tool clamping.

Note: If the option of inner cooling through main spindle centre has been ordered, take note that with this type of spindle, the rotary joint does note allows air blowing during machining, only coolant passage and dry.

In case that this option is necessary please check with Ibarmia.

1.07 Automatic tool change

The tool magazine sits on the back side of the carriage allowing tool changes at every point of the X axis. The magazine is protected from chips and coolant from the working area.

The tool change is made by a travelling arm with two tool holders.

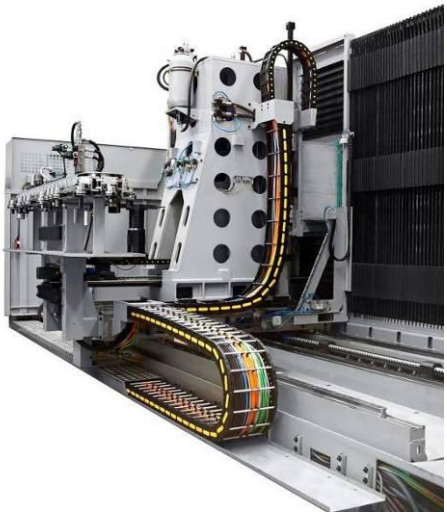

During the machining process, the tool changing arm waits on the carriage with the next tool ready on one of the holders. The arm then travels through an open door to the spindle nose to change the tool.

The arm is driven by a servomotor on a rack-wheel system for a controlled, fast and smooth tool change.

The free holder grabs the tool from the spindle before the spindle head goes up to release the cone, the arm then turns 180° presenting the next required tool and the head comes back down to hold the cone.

The arm then releases the grip on the tool in the spindle and travels back through the door to leave the used tool and get a new one for the next change.

The search and management of tools (RANDOM) is done during the machining time with a continuous movement of the magazine.

Tools can be loaded on the magazine in two different ways:

Either directly on the tool magazine through an access door on one side of the machine or using the manual pushbutton on the spindle to load the tools from the working area.

1.08 Lineal guides and ball screws

Movements of the X/Y/Z axes are driven by digital servomotors over lineal guides with preloaded roller runners

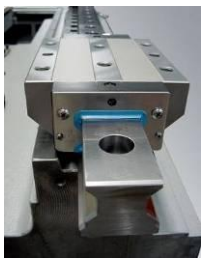

Runners with a double trail of rollers with recirculation on each side (4 contact lines).
Every runner has automatic lubrication.

High precision, ground ball screws have preloaded double nuts.

(See description in the specifications chapter of the standard model).

1.09 Measuring system

Coded **glass scales** for rapid, direct and accurate position measuring are on X/Y/Z axes.



Glass scales can be pressurized on request.

At the same time, the motors have an encoder that can be activated as a direct measuring system in case of emergency.

Verification and laser calibration of axes are per norm VDI 3441.

Measuring and adjustment of circularity is done by ballbar with measuring protocols.

1.10 Automatic central lubrication system

A central oil lubrication system has one tank.

A programmable timer actuates lubrication cycles. A light alarm signal notifies lubrication failure.

1.11 Chip evacuation

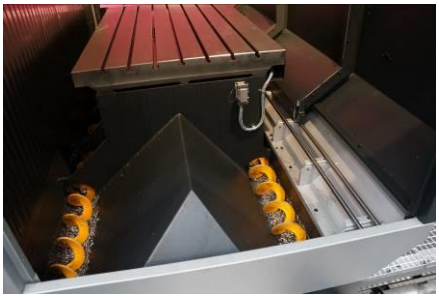

Chip evacuation in 2 stages:

1º Stage: Inside the working area

2 longitudinal endless screws on the front and back of the machine bed under the table push the chips out to an external chip conveyor on the side of the machine.

At the end of the table, the screws go through the machine bed so the chips fall into the lift up chip conveyor.

- Screw diameter: 150 mm
- Pitch of the screw: 150 mm
- Rotation speed: 9 rpm
- Power of motor: 0,33 kW

2º Stage: Coolant recovery and chip discharge



Once in the lift up conveyor, the chips are pushed out by either slat bands (recommended for long steel shavings) or a drag link (recommended for short shavings of steel, aluminium, bronze, brass, casting…). The type of conveyor must be selected when placing the order.

Coolant filters are integrated in the chip conveyor for easy access and cleaning.

Note: The chip conveyor is installed on the left side of the machine. (Looking at the machine from the front side)

1.12 External coolant device

Motor pump integrated in the chip conveyor for external coolant

- Power: 2,20 kW
- Nominal flow: 50 l/min

4 articulating, regulated nozzles surround the main spindle nose.

1.13 Standard protection

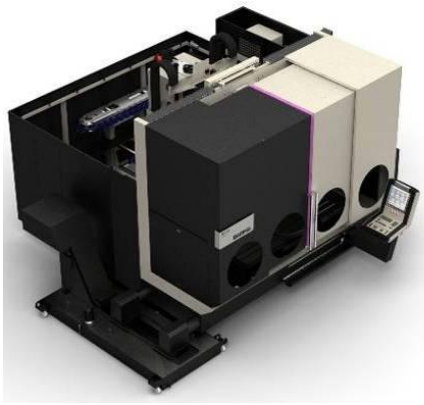

The working area is fully encapsulated to contain chips and coolant as well as reduce noise levels.

The design of the guarding allows loading pieces with a bridge crane as the roof is opened together with the doors.

The moving elements, the tool magazine, the lineal guides etc. are protected from chips and coolant by stainless steel covers that close the working area hermetically.

Articulated cable holder chains channel and protect cables on X/Y/Z axes.

Safety micro switches monitor the front access doors to close and block the working area and the rear access to the tool magazine.

A safety device protects against opening electrical cabinet doors with power on.

The machine is built according to European safety standards and with “CE” approval.

1.14 Machine levelling elements

It is recommended to fix the machine to the ground, foundation drawings are provided for this purpose.

Support and levelling points are conveniently distributed in the machine bed.

All levelling screws and support discs are provided with the machine. Required foundation works are customer’s responsibility.

1.15 Cooled electrical cabinet

Easy access to a spacious and neat electrical cabinet on the right side of the machine
Safety micro switches and key lock on doors
Filter for electromagnetic compatibility
Special cables of high flexibility protect against wear
Cables are numbered on both ends
The cooling system has programmable temperature control.

1.16 CNC control

Digital CNC FANUC 31i-B

Description:
Version until 20 axis plus spindle
Simultaneous interpolation of 5 axes
Manual Guide
Programming:
According to DIN in ISO and Manual Guide *i*
Position data:
Nominal positions for straight lines and circular arcs in Cartesian or polar coordinates
Dimensions absolute or incremental
Display and entry in mm
Tool compensation:
Tool radius in the working plane and tool length
Tool tables:
1 Tool table with up to 240 tools
Parallel operation:
Creating programs while another program is being run (Background Editing)
Contour elements:
Line segment, chamfer, circular arc, circle centre, circle radius, tangentially connecting circular arc, corner rounding
High level programming:
Parametrical programming (Custom macro B)
Fixed cycles:
Cycles for drilling, peck drilling, reaming, boring, counter boring, conventional and rigid tapping
Roughing and finishing rectangular and circular pockets in Manual Guide *i*
Cycles for clearing in Manual Guide *i*
Cycles for milling straight and circular slots in Manual Guide *i*
Circular and linear point patterns in Manual Guide *i* (consecutive drillings)
Contour pockets in Manual Guide *i*
Coordinate transformations:
Datum shift (Workpiece coordinate system), rotation (Coordinate system)
AICC I (Avance read of 200 lines, optional until 1000)
Mirror image in manual guide
Programming aids:
Context-sensitive help function for error messages in Manual Guide *i*
Graphical support for programming cycles in Manual Guide *i*
Comment blocks in the NC program
Verification graphics:
Graphic simulation before a program run in Manual Guide *i*
Display models in Manual Guide *i*:
Plan view / projection in 3 planes / 3-D view
Components:
Logic Unit: CNC 31i-B



Keyboard Unit: incorporated (type QWERTY)

TFT colour flat-panel display with 15 inches with softkeys

Program memory:

Piece program memory: 2Mb

Card reader: PCMCIA

Work mode remote: Automatic, DNC and Data Server

Data server: Storage programs in card CF ATA and Ethernet port

Interpolation:

Lineal

Circle

Spiral and Helix: Combination of circular and linear motion (cone and cylinder)

Data interfaces: Ethernet

Ethernet

Ambient temperature:

Operation: 0º C \ +45ºC

Storage: -30ºC \+70º C

Description of the offer

2.01 Description of the standard model

4 axes model: longitudinal X, transversal Y, vertical Z, tilting B

Structure (head, column and carriage) made in welded steel

CNC: Fanuc 31i-B

Screen 15”

Moving control panel (from L2200)

Continuous tilting head

Main spindle – 48/74 kW- 300 Nm – 12000 rpm

Taper – HSK A-100 (DIN 69893)

Air blow for tool cleaning

30 tool magazine

Direct measuring by glass scales on X / Y / Z axes

Measuring by encoder on B axis

Servomotors with braking system for the axes

Hydraulic counter weight for the head

Travelling on lineal guides and ball screws

Programmable central lubrication system

Longitudinal endless screws for chip evacuation

Chip Conveyor and coolant tank

External refrigeration system

Climatised electrical cabinet

Illumination of working area

Totally encapsulated working area

Vertical covers on X axis (steel bellows)

Machine levelling elements

2.02 Specifications of standard model

ZVH 60/L6000
Multiprocess

Strokes		
X-axis, longitudinal:	mm	6000
Y-axis, transversal:	mm	1100
Z-axis, vertical :	mm	1100
NC Head tilting range		+/-105º
Pendulum working (Optional):	mm	2x2665
Maximum swing diameter:		1500
Working Table:		
Length x width of the table:	mm	6.600x1.150
Number of T slots:		7
Size of the T slots:	mm	1x18(H7) / 6x18(H12)
Distance between T slots:	mm	125
Maximum admissible load over the table:	kg/m2	2000
Distance from table surface to spindle nose V (min./max.):	mm	0/1100
Distance from table surface to spindle nose H (min./max.):	mm	375/1475
Main spindle and headstock:		
Taper of the tool holder axis:		HSK A100
Electrospindle:		
Power in service S1 (100%):	kW	48/74
Power in service S6 (40%)	kW	71/84
Total available power from:	rpm	1500/4000
Torque in service S1 (100%):	Nm	300/177
Torque in service S6 (40%)	Nm	452/200
Maximal rotation speed:	rpm	12000
Maximal rotation speed intermittent:	rpm	12000
Capacity/Services		
Milling capacity in steel 600 N/mm2 :	cm3/min	1100
Drilling capacity in steel 600 N/mm2 :	mm	70
Tapping capacity in steel 600 N/mm2 :		M45

Feeds:

Digital servomotors with incorporated break system.

Feed thrust X,Y,Z 100%	N	15021/12154/10649
Feed thrust X,Y,Z 140% (S3)	N	22971/17255/15529
Rapid feed for positioning		
X-axis:	m/min	45
Y-axis:	m/min	45
Z-axis:	m/min	45
Maximum working feed		
X-axis:	m/min	30
Y-axis:	m/min	30
Z-axis:	m/min	30

Guide ways and ball screws:

Number of rollers:		
X-axis:		2+2+2
Y-axis:		3+3
Z-axis:		2+2
Distance between linear guides (mm):		
X-axis:	mm	885/805
Y-axis:	mm	710
Z-axis:	mm	710
Dimensions of rollers:	mm	55
Dimensions of ball screw:		
X-axis:	mm	D 63/ P 30
Y-axis:	mm	D 50/ P 30
Z-axis:	mm	D 50/ P 30

Measuring system:

Resolution:	µm	1
Positioning accuracy Tp X-Y (1000 mm)	µm	10
Positioning repetitibility:	µm	5
Positioning accuracy Tp B		8"

Tool magazine and automatic changer:

Number of positions of the magazine:		30
Maximal tool diameter:		
Previous and posterior taken position:	mm	125/100
Previous and posterior free position:	mm	200
Maximum tool length:	mm	400
Maximum tool weight:	kg	20
Tool management system:		Random
Tool changing time:	s	10"
Chip to chip time:	s	12"
Magazine taper:		HSK A-100 (DIN 69893)
Tool holder pull stud according to Norm:		HSK A-100 (DIN 69872)

Machine dimensions:		
Maximum length	mm	11650
Maximum width	mm	5865
Maximum height	mm	4250

Colour standard:		
Finished: structural machine painted in three colours.		
Dark grey	RAL	7021
Violet	RAL	4008
Medium grey	RAL	9006

Control	Digital CNC control FANUC 31i-B

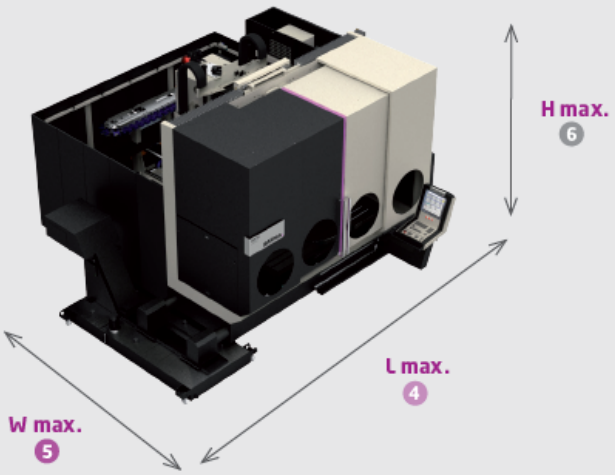

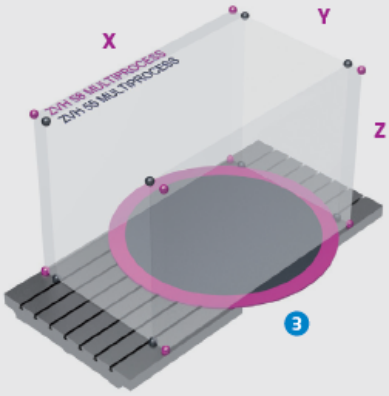

ZVH 55 M	L1600	L2200	L3000	L4000	L5000	L6000
1	1600	2200	3000	4000	5000	6000
2	2x 465	2x 765	2x 1165	2x 1665	2x 2165	2x 2665
3	1200					
4	5850	6450	7350	9050	10150	11650
5	5215					
6	3600					
7	19000	22500	24500	27500	31000	34500

ZVH 58 M	L1600	L2200	L3000	L4000	L5000	L6000
1	1600	2200	3000	4000	5000	6000
2	2x 465	2x 765	2x 1165	2x 1665	2x 2165	2x 2665
3	1400					
4	5850	6450	7350	9050	10150	11650
5	5615					
6	3600					
7	22000	25500	28500	31500	35000	38500

2.03 Options

E 028 Air guns (2 units)

Installation of two air guns, one at each side of the machine doors, including flexible hose, racordage, etc...

E 030 Spray guns (2 units)

Installation of two air guns, each at one side of the machine, including flexible hose, racordage, etc... To wash the working table, bed machine, tools and pieces.

E 031 NSM software and division wall of working areas:



NSM software or non stop machining , for pendulum working doing load/unload of pieces during machining in the opposite side with independent blocking of the access doors to the table.

Central division wall of removable separation for fixing to table "T" s, produced in metallic sheet with transparent polycarbonate to see adjacent area. Then during the station change, the spindle pushes a sheet mounted over hinges which works like a valve assuring after its passing the watertightness of working area.

Note: It is fixed and installed at the middle of X stroke.

E 054 Portable electronic hand wheel for control FANUC

Portable electronic hand wheel (connected by cable) to work the axis from any position from the front of the machine using axis keys integrated on the hand wheel.



Number of controlled axis: 7

E357 Horizontal rotary table plate / turning spindlehead for turning/milling operations Ø180mm/24Kw/100Nm

Rotary table plate / turning spindlehead to be installed on table or machine bed for horizontal operations.

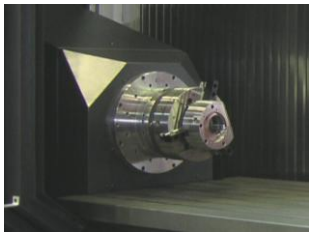

Rotary table data – direct drive lathe:

- Ø face: Ø 180 mm DIN55026 A8
- Height from table to rotation center: 375 mm standard
  260 mm optional
- Hole crossing bar: Ø 120 mm
- Transmission: Motor torque

- Motor power: 24 kW (S1)
- Torque: 100 Nm (S1)
- Basis speed: 2300 rpm
- Max. speed: 3000 rpm
- Max. Weigth capacity: 250 Kgs - 500 Kgs with tailstock
- Positioning accuracy: +/- 5”

Notes:

- Jaw Chuck not included
- Prepared to accommodate aØ250mm jaw chuck
- Flat face without T slots
- Llicense for 1 axis included
- The maximal revolutions of the rotary table can be limited depending on the installed plate
- Control Fanuc / Heidenhain
- In case of automatic jaw chuck the crossing bar minimises. To be analysed case by case.
- Piece clamping / unclamping pedal included in case of installation of automatic plate
- It is very recommended the installation of a movable control panel along the X axis stroke (E645)

Standard position: on the left side

E388 Horizontal rotary table plate / turning spindlehead for turning/milling operations Ø280mm/31,2Kw/350Nm

Rotary table plate / turning spindlehead to be installed on table or machine bed for horizontal operations.

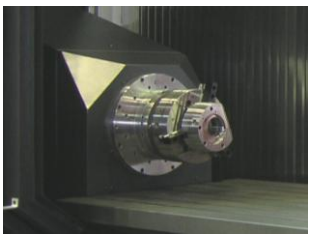

Rotary table data – direct drive lathe:

- Ø face: Ø 280 mm DIN55026 A11
- Height from table to rotation center: 375 mm
- Hole crossing bar: Ø 80 mm
- Transmission: Motor torque
- Motor power: 31,2 kW (S1)
- Torque: 350 Nm (S1)
- Basis speed: 850 rpm
- Max. speed: 1500 rpm
- Max. Weigth capacity: 350 Kgs - 700 Kgs with tailstock
- Positioning accuracy: +/- 6”

Notes:

- Jaw Chuck not included
- Prepared to accommodate Ø250mm and Ø400mm jaw chuck
- Flat face without T slots
- Llicense for 1 axis included

- The maximal revolutions of the rotary table can be limited depending on the installed plate

- Control Fanuc / Heidenhain

- In case of automatic jaw chuck the crossing bar minimises. To be analysed case by case.

- Piece clamping / unclamping pedal included in case of installation of automatic plate

- It is very recommended the installation of a movable control panel along the X axis stroke (E645)

Standard position: on the right side

E389 Horizontal rotary table plate / turning spindlehead for turning/milling operations Ø280mm/51,5Kw/820Nm

Rotary table plate / turning spindlehead to be installed on table or machine bed for horizontal operations.

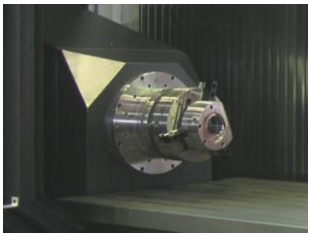

Rotary table data – direct drive lathe:

– Ø face:	Ø 280 mm DIN55026 A11
– Height from table to rotation center:	375 mm
– Hole crossing bar:	Ø 100 mm
– Transmission:	Motor torque
– Motor power:	51,5 kW (S1)
– Torque:	820 Nm (S1)
– Basis speed:	600 rpm
– Max. speed:	2000 rpm
– Max. Weigth capacity:	700 Kgs - 1400 Kgs with tailstock
– Positioning accuracy:	+/- 4”

Notes:

- Jaw Chuck not included

- Prepared to accommodate Ø340mm, Ø400mm and Ø500 mm jaw chuck

- Flat face without T slots

- Llicense for 1 axis included

- The maximal revolutions of the rotary table can be limited depending on the installed plate

- Control Fanuc / Heidenhain

- In case of automatic jaw chuck the crossing bar minimises. To be analysed case by case.

- Piece clamping / unclamping pedal included in case of installation of automatic plate

- It is very recommended the installation of a movable control panel along the X axis stroke (E645)

Standard position: on the left side

E390 Horizontal rotary table plate / turning spindlehead for turning/milling operations Ø380mm/78Kw/1400Nm

Rotary table plate / turning spindlehead to be installed on table or machine bed for horizontal operations.

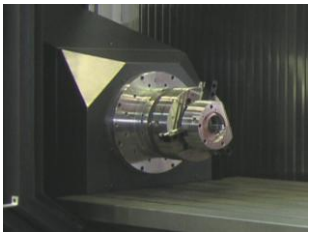

Rotary table data – direct drive lathe:

– Ø face:	Ø 380 mm DIN55026 A15
– Height from table to rotation center:	420 mm
– Hole crossing bar:	Ø 130 mm
– Transmission:	Motor torque
– Motor power:	78 kW (S1)
– Torque:	1400 Nm (S1)
– Basis speed:	530 rpm
– Max. speed:	1800 rpm
– Max. Weigth capacity:	1.500 Kgs – 3.000 Kgs with tailstock
– Positioning accuracy:	+/- 4”

Notes:

- Jaw Chuck not included
- Prepared to accommodate Ø400mm, Ø450mm, Ø500 and Ø630mm jaw chuck
- Flat face without T slots
- Llicense for 1 axis included
- The maximal revolutions of the rotary table can be limited depending on the installed plate
- Control Fanuc / Heidenhain
- In case of automatic jaw chuck the crossing bar minimises. To be analysed case by case.
- Piece clamping / unclamping pedal included in case of installation of automatic plate
- It is very recommended the installation of a movable control panel along the X axis stroke (E645)

Standard position: on the left side

E 396 Rotary table for turning and 5 axis operations of Ø 1050 mm:

At the same level of the table is integrate a rotary table of direct transmission and high dynamics for multiface works or 5 axis like vertical turning operations and faced.



Characteristics of the rotary table- transmission torque motor

– Diameter of the plate:	1050 mm
– T- slots:	Radials 4 T18H7 8 T18H10
– Central hole:	Ø 50H7 mm
– Transmission:	Direct by motor torque
– Motor power:	42 kW (S1)
– Torque:	2.000 Nm at 200 rpm (S1) – 502 Nm at 500 rpm (S1)
– Speed:	0- 500 rpm
– Max. Weight capacity:	1500 Kgs
– Positioning accuracy:	+/- 5”

Notes: - Clamping device is not included

- License for 1 axis included

- The maximal revolutions of the rotary table can be limited depending on the installed plate

- Control Fanuc / Heidenhain

Standard position: on the right side

E 397 Additional fix tool magazine of 60 tools mounted at the rear side of the machine ISO 40-50 / HSK 63-100:

This magazine is composed of a 60 tool carousel with activated turning by means of three-phase motor and fixed at the floor behind the machine.

A intermediate boom will do the tool change from the fix magazine to the movable one ("lung") which is installed at the back of the saddle, close to it.

Generally and taking into account the pendulum work at least 2 transfer points are established between the static carousel and the lung.

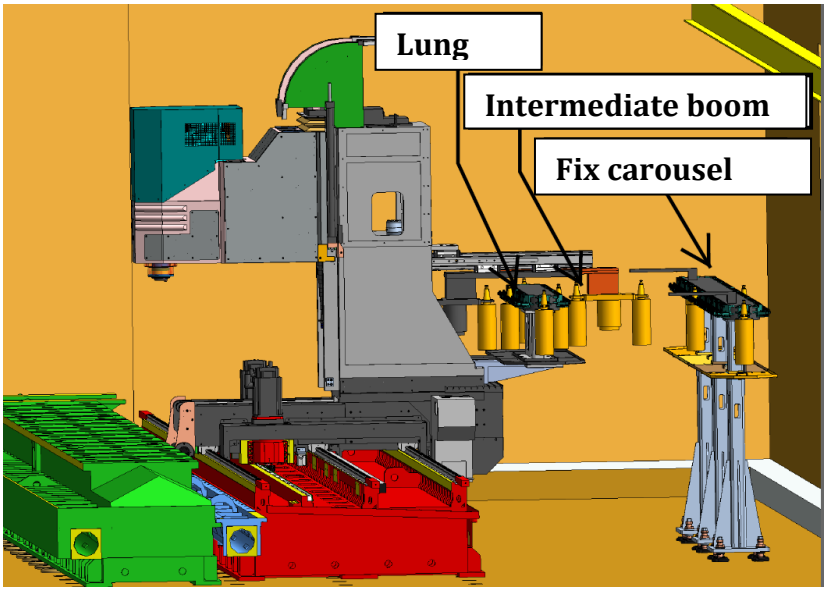

Note:

Only taper ISO40, ISO50, HSK A63 and HSK A100.

E 435 Tool magazine of 80 positions for series ZV Extreme and Multiprocess ISO 50/HSK A100:

Enlargement of the magazine from 30 to 80 tools capacity.

Magazine in "U"-shape lodged on the back of the column

Tool max diameter: with full magazine: 100 mm

NOTE: This involves enlargement of guarding

E 536 RENISHAW touch trigger by infrared model OMP 60:

RENISHAW touch trigger model OMP 60 for piece inspection, optical transmission by infrared for loading into automatic tool magazine.



NOTE: If the machine has one of following features, we recommend offering OMP 60 with double receiver OMM-2:

-Machine ZVH

-Machines with NSM (E031)

-Long machines

E 620 Horizontal rotary table plate / turning spindlehead for turning/milling operations Ø380mm/47Kw/840Nm

Rotary table plate / turning spindlehead to be installed on table or machine bed for horizontal operations.

Rotary table data – direct drive lathe:

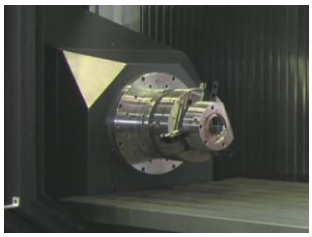

– Ø face:	Ø 380 mm DIN55026 A15
– Height from table to rotation center:	420 mm
– Hole crossing bar:	Ø 130 mm
– Transmission:	Motor torque
– Motor power:	47 kW (S1)
– Torque:	840 Nm (S1)
– Basis speed:	530 rpm
– Max. speed:	1800 rpm
– Max. Weigth capacity:	1500 Kg - 3000 Kg with tailstock
– Positioning accuracy:	+/- 4”

Notes:

- Jaw Chuck not included
- Prepared to accommodate Ø400mm, Ø450mm, Ø500 mm and Ø630 mm jaw chuck
- Flat face without T slots
- Llicense for 1 axis included
- The maximal revolutions of the rotary table can be limited depending on the installed plate
- Control Fanuc / Heidenhain
- In case of automatic jaw chuck the crossing bar minimises. To be analysed case by case.
- Piece clamping / unclamping pedal included in case of installation of automatic plate

- It is very recommended the installation of a movable control panel along the X axis stroke (E645)

Standard position: on the left side

E 634 Inner cooling through main spindle centre (70 bar)

Inner cooling equipment through main spindle centre for inner cooled tools.

High pressure pump for inner cooling:

Power:	7,5 Kw
Maximum pressure:	70 bar
Minimal Output:	38,5 l/ min

Standard pump for coolant passage

Power:	0,76 Kw
Maximal Output:	50 l /min

Coolant filtering system:

1º Decantation by inner walls inside the chip conveyor.

Coolant tank capacity: 470 l

2º Coolant filtering with paper filter through JUMA 100 group with the following characteristics:

Filtering:	30 µ
Filtering volume:	100 l/min
Tank capacity:	500 l
Dragging reducer power:	0,09 kW

3ºCartridge filter of 40 microns at the exit of the high-pressure pump.

(Filters with washable cartridge with central column with magnets to retention of iron particles). Control of coolant level in both tanks to avoid overflowing.

Note: total valid capacity: 970 l

E 665 Tool touch trigger RENISHAW model TS27R with square touch point

Touch trigger RENISHAW model TS27R with square touch point for adjustment and control of length and diameter of turning tools, this device is installed on the T slots of the fixed table.

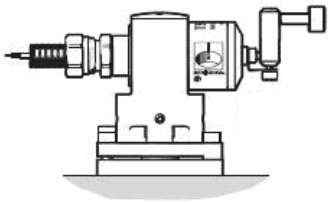

E 460 Manual tailstock for horizontal lathe (axis centre height 420 mm):

Axis centre height:	420 mm
Point stroke:	120 mm
Revolving point:	type 8811 / DIN
228 mm	
Size of point:	MK6
Angle of point:	60º
Maximal point speed:	1800 rpm

Maximal weight to support between rotary table- tailstock: 3000 kg



E 653 Preparation spindle head for manual change of support manual LBB:

Preparation of lower part of spindle head for manual clamping / unclamping of a LBB support. The LBB support will be manually fixed by 4 manual struts which are located at both laterals of the spindle head.

It includes a preparation to supply coolant through the LBB.

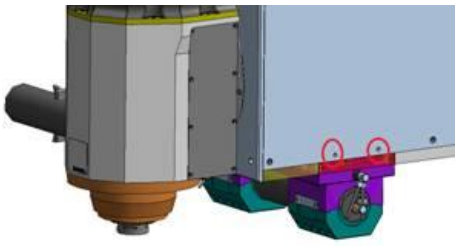

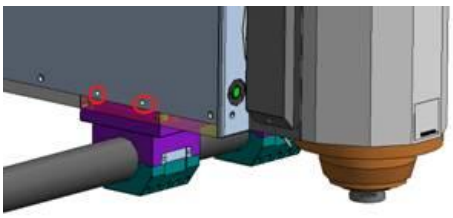

NOTES:

- For an ergonomic clamping/unclamping, It is recommended to purchase the option E654 “Positioning device for loading / unloading of LBB support”.

- During the change process of cover/support LBB and/or support LBB/cover the worker must open and close the door twice.

E 600 Cover:

Cover to close the spindlehead perimeter when there is not support LBB.

E 649 Support for manual tool Long Boring Bar Ø80mm:

Support ready to lodge manual LBB Ø80mm.

It includes preparation for coolant through the long boring bar.

NOTES:

- - - LBB not included. The client must send the Long Boring Bar to IBARMIA for preparation, adjustment and calibration in machine before its shipment.

2.04 Documentation

- Instructions book (operating and maintenance): 1 paper copy, 1 CD
- CnC programming book: 1 paper copy
- PLC program: 1 CD
- Machine electrical drawings: 1 paper copy, 1 CD
- Machine hydraulics drawings: 1 paper copy, 1 CD
- Machine pneumatic drawings: 1 paper copy, 1 CD
- Layout and foundation drawings: sent by email.
- Assembly drawings and list of parts: 1 paper copy, 1 CD
- Machine inspection certificates
    1. Geometry protocols: *1 paper copy*
    2. CE certificate: *1 paper copy*

NOTE: *Additional paper copies and CD 500€*

3.01 Summary of offer

ZVH 60/L6000 Multiprocess

Standard machine;

Digital CNC control FANUC 31i-B	EUR.	included
HSK A-100 tool taper for milling + turning tools	EUR.	included
Cooled Main spindle 84kW - 452Nm - 12.000 rpm in S6-40%	EUR.	included
Continous NC tilting head +/- 105º with Cooled Torque Direct Drive technologie	EUR.	included
Coolant tank 400l and 6 bar outer coolant	EUR.	included
Direct measurement system with Heidenhain glass scales on all linear axes	EUR.	included
LED ligthing of the working area	EUR.	included
Automatic tool changer with double gripper arm perfect protected against chip and coolant (24 tools)	EUR.	included
Two-stage chip conveyor	EUR.	included
RITTAL electrical cabinet including air condition	EUR.	included
Full encapsulation of the workspace , rear panel with stainless steel slats	EUR.	included
Extra Side doors for the introduction of extra-long workpieces	EUR.	included
Folding step for easy entry in the working area	EUR.	included
Preparation for mist suction	EUR.	included
Price standard model with control FANUC	**EUR.**	**704.800**

OPTIONS

E 028 I	Air guns (2 units)	EUR.	400
E 030 I	Spray guns (2 units)	EUR.	1.190
E 031 I	NSM software and division wall of working areas	EUR.	2.480
E 054 I	Portable electronic hand wheel for control FANUC	EUR.	1.690
E 357 I	Horizontal rotary table plate / turning spindlehead for turning/milling operations Ø180mm/24Kw/100Nm	EUR.	53.770
E 388 I	Horizontal rotary table plate / turning spindlehead for turning/milling operations Ø280mm/31,2Kw/350Nm	EUR.	54.760
E 389 I	Horizontal rotary table plate / turning spindlehead for turning/milling operations Ø280mm/51,5Kw/820Nm	EUR.	80.640
E 390 I	Horizontal rotary table plate / turning spindlehead for turning/milling operations Ø380mm/78Kw/1400Nm	EUR.	116.710
E 396 I	Rotary table for turning and 5 axis operations of Ø 1050 mm	EUR.	91.430
E 397 I	Additional fix tool magazine of 60 tools mounted at the rear side of the machine	EUR.	68.360
E 435 I	Tool magazine of 80 positions for series ZV Extreme and Multiprocess ISO50/BT50/HSK A100	EUR.	33.400
E 536 I	RENISHAW touch trigger by infrared model OMP 60	EUR.	9.660
E 620 I	Horizontal rotary table plate / turning spindlehead for turning/milling operations Ø380mm/47Kw/840Nm	EUR.	99.380
E 634 I	Inner cooling through main spindle centre (70 bar)	EUR.	21.840

E 665 I	Tool touch trigger RENISHAW model TS27R with square spindle head	EUR.	3.900
E 460 i	Manual tailstock (centre height 420mm)	EUR	12.260
E 653 I	Preparation of headstock for manual integration of LBB	EUR	20.700
E 649 I	Support for ø80 LBB	EUR	10.920

3.02 General conditions

Manufacturing lead time

Approximate lead time, to be confirmed when placing the order. 8 months.
Purchase order will be valid with corresponding down payment.
Clarification of all technical and financial details may affect manufacturing lead time.

SALES CONDITIONS

Incoterrms 2010: Ex-Works.
Transport: Cost and organization not included
Insurance: Cost and organization not included.
Unloading and positioning: Cost and organization not included.

INSTALLATION

Foundation not included. IBARMIA will provide instruction and necessary drawings.
Installation and set up by IBARMIA / DISTRIBUTOR. The machine must be fixed in position and connected to main energy, air and refrigeration supplies prior to the arrival of the technicians for installation.
IBARMIA reserves the right to invoice deviations in the foreseen times for installation due to reasons non imputable to manufacturer.
Maintenance and operation training by IBARMIA / DISTRIBUTOR: 1,5 days
Additional training days to be invoiced by manufacturer.

WARRANTY

Period: 12 months or 2.000 working hours for manufacturing defects. Guarantee period begins on the date of acceptance and never later than 30 days after the machine road expedition or 60 days after a sea expedition.
Parts subject to natural wear are not covered by the guaranty.
Technical assistance during guaranty period by IBARMIA / DISTRIBUTOR
Spare parts during guaranty period by IBARMIA (transport not included)
Wrong use and operation of the machine will cancel the guaranty.

PRICE

In Euros, machine prepared for transport.

PAYMENT TERMS

25% Swift transfer when placing the order.
65% Swift transfer at machine's acceptance at IBARMIA, before loading.
10% Swift transfer at machine's acceptance at customer's premises.

VALIDITY OF THE OFFER

2 months form date of offer.
IBARMIA reserves the right to make technical modifications of the offer.
Contents are without engagement subject to changes without notice.

REMAININIG SALES CONDITIONS

The ones established in the general sales conditions of AFM (Machine Tool, Accessories, Component parts and Tool Manufacturers Association of Spain).