Carlyle®

Performance you demand, quality you rely on.

TS
TT
TU
TV



PARAGON™

TWIN SCREW COMPRESSORS

THE MOST ADVANCED
COMPRESSOR TECHNOLOGY AVAILABLE

PARAGON TWIN SCREW COMPRESSORS

THE MOST ADVANCED COMPRESSOR TECHNOLOGY AVAILABLE

PARAGON TWIN SCREW COMPRESSORS

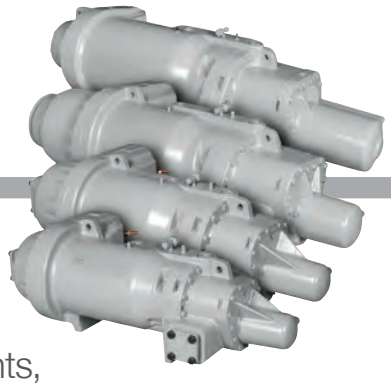

Carlyle Compressors

Every day around the world, Carlyle compressors are working quietly and efficienctly in supermarkets, computer rooms, manufacturing plants, on board ships and over the road. Carlyle compressors consistently meet and exceed the demands of challenging environments, providing the most reliable refrigeration in the world.

Carlyle compressors are more dependable and durable by design. In critical applications where extreme conditions are frequently encountered, first-year failure rates are a mere 0.29%.

Carlyle compressors also provide higher performance. Twin screw models can be applied in high, medium, and low-temperature applications. With the widest operating range available for all standard refrigerants and lubricants, Carlyle has a compressor that will fit any application.

Carlyle's advanced engineering superior efficiencies that can save thousands of dollars in energy costs over the lifespan of the unit.

PARAGON™
TWIN SCREW COMPRESSORS

Physical Data

Air Cooled—R134A

Note: Normal operating speed is 3,500 RPM.
Nominal capacity using ARI Standard 540 (45°F SST, 130°F SDT, 65° return gas, economized to SIT 10°F)

Models	Displacement (CFM at 60Hz)	Nominal Horsepower	Nominal Capacity (Tons)
06TSA137	137	60	44
06TSA155	155	75	50
06TSA186	186	75	59
06TTA266	266	120	86
06TTA301	301	150	101
06TTA356	356	150	120
06TUA483	483	225	165
06TUA554	554	225	185
06TVA680	680	340	228
06TVA753	753	340	252
06TVA819	819	340	275

Water Cooled—R134A

Note: Normal operating speed is 3,500 RPM.
Nominal capacity using ARI Standard 540 (40°F SST, 100°F SST, 65° return gas, economized to SIT 10°F)

Models	Displacement (CFM at 60Hz)	Nominal Horsepower	Nominal Capacity (Tons)
06TTW266	266	90	95
06TTW301	301	90	108
06TTW356	356	120	129
06TUW483	483	160	172
06TUW554	554	160	195
06TVW680	680	225	244
06TVW753	753	225	269
06TVW819	819	225	292

Refrigeration—R404A

Note: Normal operating speed is 3,500 RPM.
Nominal capacity using ARI Standard 540 (-25°F SST, 110°F SDT, 65° return gas, economized to SIT 10°F)

Models	Displacement (CFM at 60Hz)	Nominal Horsepower	Nominal Capacity (Tons)
06TSR137	137	60	19
06TSR155	155	75	21
06TSR186	186	75	25
06TTR266	266	120	39
06TTR301	301	150	46
06TTR356	356	150	54



Performance Data

Air Cooled—Non-Economized

20° F Superheat, 15° sub-cooling

Compressor Model	Condensing Temperature SDT (°F)	Q (Btu/hr)* P (kW)	Evaporation Temperature (°F)					
			55°	45°	35°	25°	15°	5°
06TSA137	90°	Q	750,750	618,662	502,908	402,993	318,356	248,383
		P	32.5	30.7	29.0	27.6	26.4	25.4
	110°	Q	668,644	548,952	444,446	354,620	278,904	216,678
		P	38.2	36.3	34.7	33.2	31.9	30.9
	130°	Q	582,779	475,637	382,498	302,842	236,093	181,622
		P	45.4	43.5	41.8	40.3	39.0	37.9
06TSA155	90°	Q	839,882	700,317	574,936	463,394	365,281	280,141
		P	36.0	34.1	32.4	30.7	29.2	27.7
	110°	Q	748,989	621,707	507,700	406,614	318,031	241,486
		P	42.6	40.7	38.9	37.2	35.6	34.1
	130°	Q	650,288	535,678	433,410	343,116	264,372	196,704
		P	51.1	49.2	47.4	45.6	44.0	42.5
06TSA186	90°	Q	975,274	812,182	666,234	536,992	423,945	326,523
		P	40.7	38.9	37.1	35.4	33.8	32.3
	110°	Q	872,352	723,430	590,543	473,242	371,008	283,261
		P	49.2	47.3	45.4	43.6	41.9	40.2
	130°	Q	761,962	627,646	508,223	403,233	312,145	234,373
		P	59.8	57.8	55.8	54.0	52.1	50.4
06TTA266	90°	Q	1,499,619	1,249,987	1,025,367	825,160	648,659	495,067
		P	65.3	61.4	57.8	54.6	51.7	49.1
	110°	Q	1,350,124	1,121,952	917,203	735,263	575,409	436,834
		P	75.3	71.6	68.1	65.0	62.2	59.7
	130°	Q	1,187,119	981,091	796,851	633,765	491,099	368,031
		P	88.5	84.9	81.5	78.5	75.8	73.4
06TTA301	90°	Q	1,705,599	1,415,675	1,156,061	925,988	724,560	550,773
		P	70.3	66.5	63.1	59.8	56.9	54.2
	110°	Q	1,531,064	1,265,782	1,028,871	819,547	636,897	479,904
		P	82.8	79.1	75.6	72.4	69.5	66.9
	130°	Q	1,342,142	1,102,373	888,982	701,162	537,984	398,417
		P	98.8	95.1	91.7	88.6	85.7	83.1
06TTA356	90°	Q	2,003,497	1,670,697	1,371,609	1,105,414	871,146	667,719
		P	83.6	78.7	74.2	70.0	66.3	63.0
	110°	Q	1,801,776	1,497,164	1,224,132	981,839	769,302	585,420
		P	97.0	98.2	87.8	83.8	80.3	77.2
	130°	Q	1,580,502	1,305,123	1,059,130	841,659	651,706	488,156
		P	115.0	110.4	106.2	102.3	99.0	96.0
06TUA483	90°	Q	2,644,378	2,211,228	1,819,274	1,467,603	1,155,119	880,573
		P	118.7	110.2	102.5	95.6	89.6	84.4
	110°	Q	2,384,110	1,987,822	1,630,177	1,310,234	1,026,876	778,834
		P	135.9	127.8	120.6	114.2	108.6	103.9
	130°	Q	2,104,870	1,746,565	1,424,275	1,137,028	883,682	662,949
		P	159.3	151.7	145.0	139.0	133.9	129.7
06TUA554	90°	Q	3,017,308	2,515,307	2,065,167	1,665,594	1,315,070	1,011,893
		P	127.3	119.0	111.5	104.9	99.0	93.9
	110°	Q	2,715,552	2,257,611	1,848,160	1,485,868	1,169,189	896,399
		P	148.0	140.2	133.1	126.8	121.3	116.6
	130°	Q	2,391,754	1,978,963	1,611,187	1,287,058	1,005,002	763,267
		P	175.1	167.6	160.9	155.0	149.9	145.5
06TVA680	90°	Q	3,801,921	3,167,390	2,598,560	2,093,786	1,651,142	1,268,468
		P	173.4	159.9	147.9	137.2	128.0	120.2
	110°	Q	3,429,906	2,849,996	2,331,545	1,872,866	1,471,999	1,126,755
		P	197.0	184.2	172.9	162.9	154.4	147.3
	130°	Q	3,036,306	2,512,410	2,045,597	1,634,137	1,276,032	969,065
		P	228.7	216.6	206.0	196.7	188.9	182.5
06TVA753	90°	Q	4,142,704	3,420,357	2,785,305	2,234,959	1,766,377	1,376,328
		P	179.7	166.1	154.0	143.4	134.5	127.1
	110°	Q	3,743,429	3,080,638	2,499,305	1,996,795	1,570,131	1,216,054
		P	208.1	194.2	181.9	171.1	161.9	154.3
	130°	Q	3,317,804	2,716,738	2,191,105	1,738,222	1,355,073	1,038,367
		P	244.0	229.9	217.3	206.3	196.9	189.0
06TVA819	90°	Q	4,453,665	3,710,059	3,044,764	2,455,777	1,940,761	1,497,102
		P	191.5	177.9	165.7	154.8	145.2	137.0
	110°	Q	4,015,984	3,333,728	2,724,803	2,187,160	1,718,426	1,315,957
		P	221.4	208.5	197.1	186.9	178.1	170.7
	130°	Q	3,551,706	2,933,013	2,382,514	1,898,109	1,477,387	1,117,671
		P	261.1	249.0	238.3	228.9	220.9	214.2

Performance Data (continued)

Air Cooled—Economized

20° F Superheat, SIT + 10

Compressor Model	Condensing Temperature SDT (°F)	Q (Btu/hr)* P (kW)	Evaporation Temperature (°F)					
			55°	45°	35°	25°	15°	5°
06TSA137	90°	Q	709,877	614,243	521,233	430,179	315,318	284,325
		P	32.5	30.6	29.2	28.2	27.3	26.5
	110°	Q	685,242	581,343	486,335	402,737	328,764	265,195
		P	38.9	37.7	36.5	35.3	34.1	33
	130°	Q	629,830	532,831	446,295	368,096	299,117	241,176
		P	49.1	47.6	46.1	44.6	43.2	41.8
06TSA155	90°	Q	785,570	685,918	609,009	490,155	399,522	319,064
		P	35.1	34.5	33.7	32.4	31.1	29.9
	110°	Q	760,419	653,160	551,949	459,716	374,486	297,182
		P	44.3	43.2	42	40.8	39.4	38
	130°	Q	703,455	601,206	506,991	416,623	335,276	261,543
		P	55.6	54.3	52.9	51.3	49.6	47.7
06TSA186	90°	Q	934,537	804,540	679,670	562,888	464,865	382,325
		P	40.7	39.5	38.3	37.4	36.6	35.8
	110°	Q	909,696	764,894	641,155	529,186	435,236	359,063
		P	52.3	50.7	49.3	47.9	46.5	45.2
	130°	Q	837,776	703,994	586,129	481,492	391,356	318,212
		P	66.5	64.4	62.4	60.4	58.5	56.7
06TTA266	90°	Q	1,388,664	1,218,434	1,050,786	877,297	717,865	567,075
		P	63.8	61.8	59.4	57.2	55	52.7
	110°	Q	1,362,406	1,177,819	1,005,177	835,291	680,260	539,938
		P	77.5	75.2	73	70.5	68.2	65.8
	130°	Q	1,281,905	1,100,040	932,175	777,040	628,277	493,565
		P	95.1	92.5	90.1	87.6	84.9	82
06TTA301	90°	Q	1,664,958	1,445,865	1,213,282	1,002,559	811,367	653,206
		P	71.2	68.3	65.5	62.9	60.4	59.8
	110°	Q	1,636,500	1,357,308	1,139,953	939,926	758,310	594,820
		P	81.2	84.1	80.5	78.6	75.7	72.8
	130°	Q	1,470,168	1,250,539	1,050,185	863,931	693,516	540,487
		P	107.3	104.4	101.5	98.5	95.3	91.9
06TTA356	90°	Q	1,921,504	1,682,460	1,430,497	1,193,565	962,146	772,982
		P	84.7	81.6	78.5	75.6	70	69.2
	110°	Q	1,948,225	1,608,496	1,356,335	1,132,483	925,027	730,583
		P	94.6	99.8	93.3	93.6	90.7	87.3
	130°	Q	1,748,719	1,497,306	1,265,649	1,047,456	844,571	661,391
		P	127	123.7	120.4	116.9	113.2	109.5
06TUA483	90°	Q	2,474,330	2,170,202	1,870,130	1,552,613	1,286,643	996,891
		P	115.6	111	105.1	99.5	97.2	89.7
	110°	Q	2,434,774	2,085,133	1,804,329	1,477,278	1,195,232	946,822
		P	140	134.1	128.4	123.1	132.6	112.6
	130°	Q	2,273,775	1,953,188	1,656,970	1,376,573	1,114,467	872,847
		P	171	165.1	159.4	153.5	147.7	141.9
06TUA554	90°	Q	2,827,541	2,466,728	2,117,718	1,756,948	1,454,068	1,171,612
		P	125.4	120.3	114.4	109.2	107.6	108.4
	110°	Q	2,771,228	2,371,842	2,045,164	1,666,896	1,346,026	1,086,499
		P	152.8	147.1	142.4	144	145.5	126.4
	130°	Q	2,585,394	2,208,752	1,857,843	1,542,683	1,255,709	999,796
		P	188.1	182.4	176.7	171.3	165.7	160.1
06TVA680	90°	Q	3,759,156	3,267,155	2,727,867	2,266,840	1,846,066	1,467,999
		P	161	151	149.2	144	137.3	129.9
	110°	Q	3,620,178	3,078,406	2,601,235	2,150,096	1,755,436	1,392,184
		P	201.8	194	187.3	178.8	174.1	162.4
	130°	Q	3,377,764	2,878,371	2,413,433	1,994,541	1,611,055	1,271,072
		P	250.9	241.6	231.7	222.3	212.7	203.6
06TVA753	90°	Q	4,152,482	3,543,253	2,957,727	2,453,893	1,991,161	1,608,233
		P	180	169	161.9	155.4	147.5	140.6
	110°	Q	3,980,899	3,379,431	2,828,305	2,331,634	1,893,031	1,521,780
		P	220.7	212.9	204.7	196	187.1	178.6
	130°	Q	3,761,709	3,189,016	2,663,085	2,188,163	1,775,627	1,417,723
		P	274.3	264.5	254.2	243.4	233.1	222.7
06TVA819	90°	Q	4,404,520	3,826,825	3,220,027	2,674,075	2,176,255	1,736,187
		P	217.1	170.6	172.5	166.2	158.4	150.5
	110°	Q	4,226,171	3,607,365	3,046,097	2,537,851	2,062,440	1,942,585
		P	232.1	225	217.5	209.8	200.4	191.4
	130°	Q	3,934,014	3,365,655	2,833,204	2,350,983	1,899,440	1,500,806
		P	291.4	282.3	272.2	262.4	251.4	241.1

Paragon Operating Envelopes - R134A

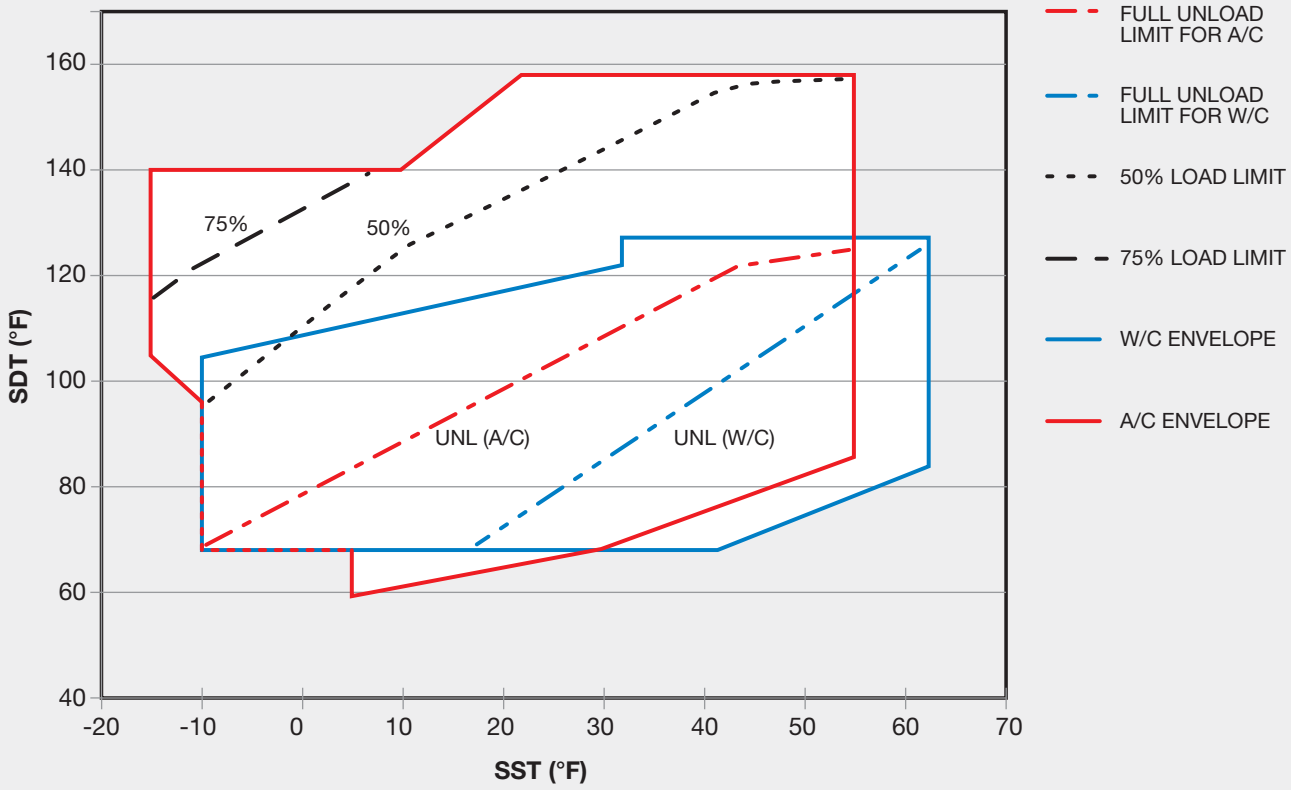

Paragon Operating Envelopes - R404A

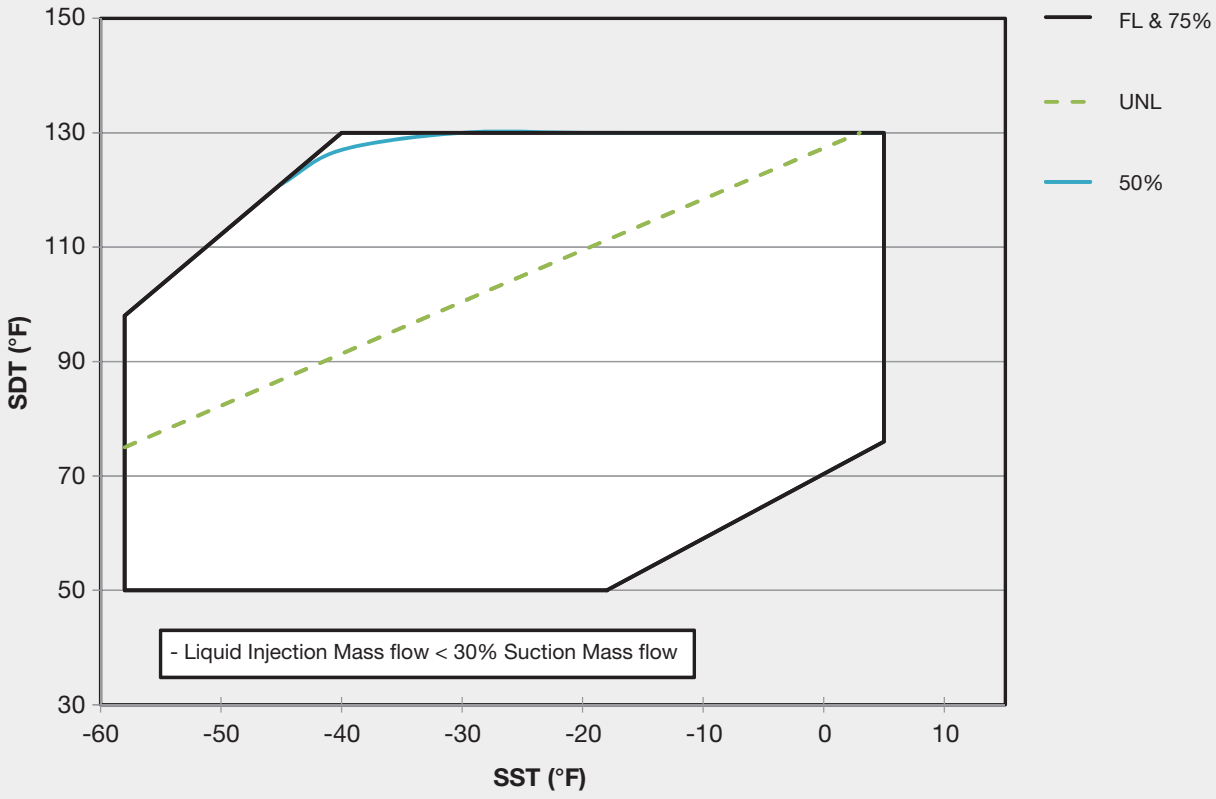

Technical Drawings

TS

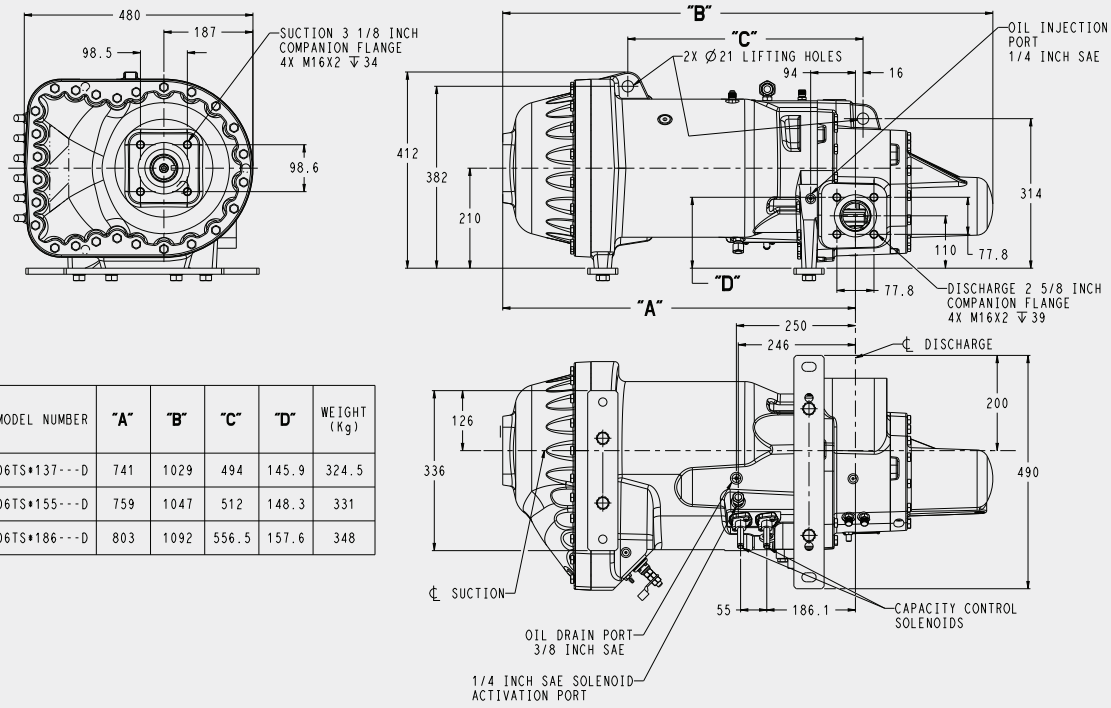

MODEL NUMBER	"A"	"B"	"C"	"D"	WEIGHT (Kg)
06TS*137---D	741	1029	494	145.9	324.5
06TS*155---D	759	1047	512	148.3	331
06TS*186---D	803	1092	556.5	157.6	348

TT

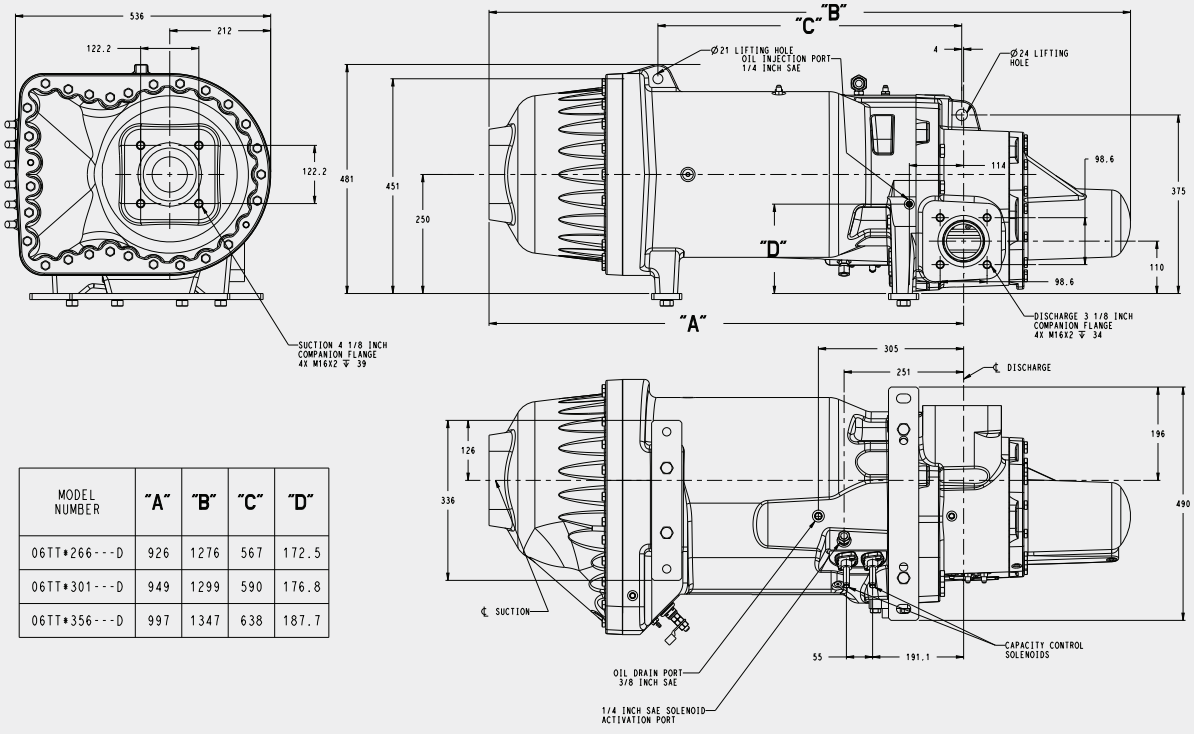

MODEL NUMBER	"A"	"B"	"C"	"D"
06TT*266---D	926	1276	567	172.5
06TT*301---D	949	1299	590	176.8
06TT*356---D	997	1347	638	187.7

TU

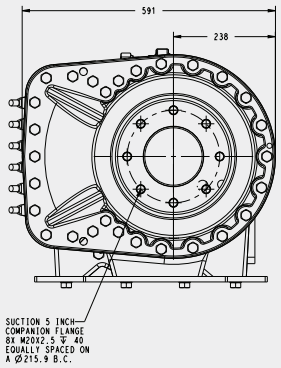

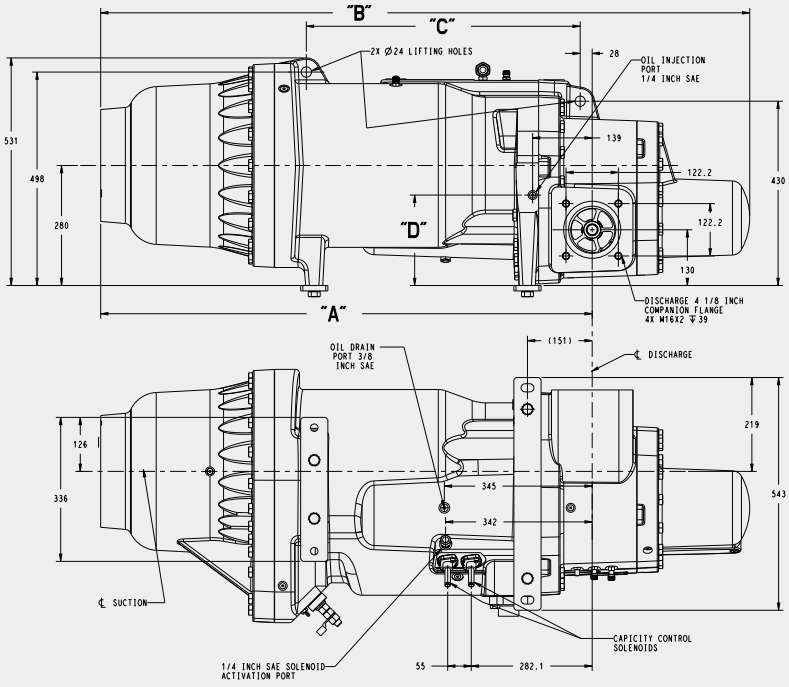

MODEL NUMBER	"A"	"B"	"C"	"D"
06TU*483---D	1099	1466	591	199
06TU*554---D	1147	1514	639	211

TV

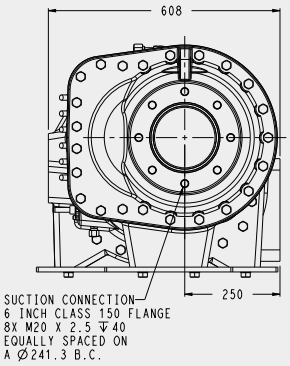

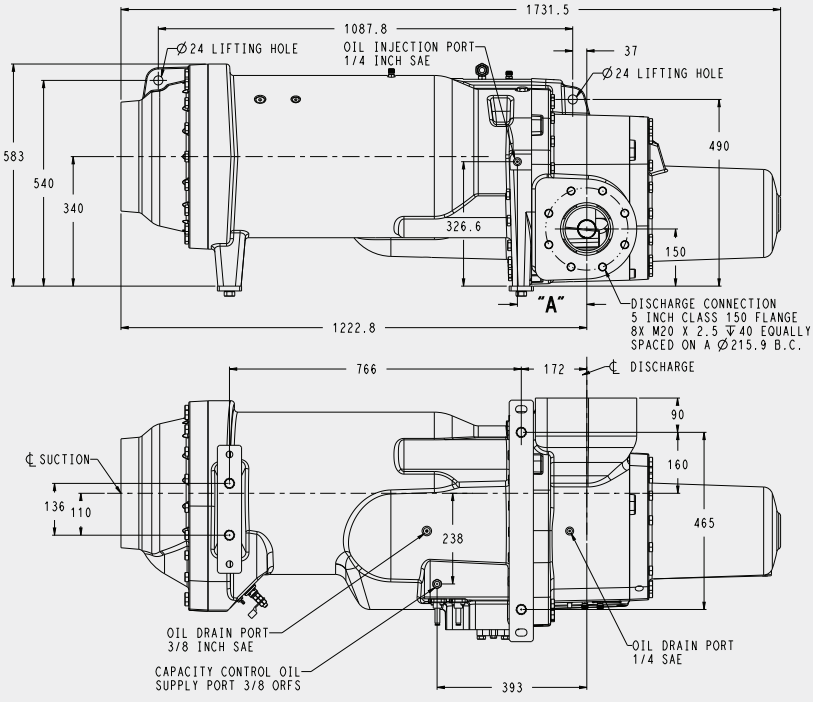

MODEL NUMBER	"A"
06TV*680---D	163.2
06TV*753---D	169.6
06TV*819---D	182.2

History of Carlyle Compressor



Dr. Willis H. Carrier



J. Irvine Lyle

The roots of Carlyle Compressor run deep into the beginnings of the refrigeration and air conditioning industries. Originally formed by Dr. Willis H. Carrier and J. Irvine Lyle, to be the "compressor arm" of Carrier Engineering Company, its inventions and achievements in technology are reflected in most of the products and services now taken for granted by modern society. The name "Carlyle" was derived from a combination of the last names of Dr. Carrier and his partner, Mr. Lyle. Foresight and strategic planning have been Carlyle's benchmarks of the last 90 years, always a gracious acknowledgment of its proud past.

The company's engineering contributions have impacted all of the known compressor designs, including centrifugal, reciprocating (open drive, sem-hermetic, and hermetic), and screw technologies. Since Dr. Carrier invented the centrifugal refrigerating machine in 1921, the centrifugal compressor has been the focus on continual product enhancements to maintain its leadership position. The company's major innovations and refinements are well documented and have resulted in the industry's most advanced product offerings.

Paragon Twin Screw Compressors

Proven More Durable in Real-World Applications

- Statistically proven more reliable than the competition
- Widest operating range
- Less downtime
- Dependable parts availability and delivery

Coast-to-Coast Distribution Network

- Widest breadth of line in the industry
- 24 x 7 x 365 service and availability
- Superior technical support
- World class training resources
- Competitive pricing
- Around-the-clock emergency compressor delivery and guaranteed core pickup
- Immediate shipments available for OEM customers
- No need to wait for production lead times

Carlyle®
Performance you demand, quality you rely on.

Carlyle Compressor
PO Box 4808
Syracuse, NY 13221, USA

© Carrier Corporation 2015
Lit. No. 575-001 Rev. A 0915