Carrier®

Air Cooled Dry coolers and Condensers

PRO-DIALOG PLUS



ISO 9001
DNV
CERTIFIED FIRM
FINAS AKKREDITOINTI
SUOMI FINLAND
S001 (EN 45012, ISO/IEC Guide 62)

EUROVENT CERTIFIED PERFORMANCE
CERTIFY-ALL
AIR COOLED CONDENSERS

EUROVENT CERTIFIED PERFORMANCE
CERTIFY-ALL
DRY COOLERS

Carrier is participating in the Eurovent Certification Programme. Products are as listed in the Eurovent Directory of Certified Products.

09GE and 09LE

Nominal cooling capacities for dry coolers 64 to 990 kW (water) and for condensers 68 to 1016 kW (R404A)

Air cooled 09GE dry coolers and 09LE condensers are designed for commercial and industrial cooling and refrigeration plants. Due to its many sound level alternatives, the range is also suitable for the most demanding environments.

Features

- 16 sizes with nominal capacities from 64 to 990 kW (water, EN 1048) for liquid use and with nominal capacities from 68 to 1016 kW for condenser use (R404A/ΔT1 15 K, EN 327)
- Performance data according to Eurovent Rating Standards 7/C/002 and 7/C/003
- Two fan sizes and five fan speed alternatives to reach the required sound level
- Casing made of hot dip galvanised steel
- Two mounting positions: V = vertical air flow and H = horizontal air flow
- Heat transfer section is on a floating mounting to compensate for heat expansion
- Complete fan control systems available, based on fan speed regulation (SVC) or on stepped fan starting cycle (Step Control)
- Pro-Dialog option is available for dry coolers matching 30RW water cooled chillers and for air cooled condensers matching 30RWA & 30HZV condenserless chillers
- Product selection with the Polar Power selection program

Technical data

The heat transfer section is made of copper tubes and aluminium fins. Standard fin spacing is 2.3 mm. As an option, aluminium fins with epoxy coating are also available. They extend the working life of the coil in urban and coastal environments. The capacity correction factor for epoxy coated aluminium fins is 0.97.

The heat transfer section can be multi-circuited or equipped with a sub-cooling circuit. During short loading peaks a water spraying system can considerably increase the heat transfer capacity.

The coil of a dry cooler is equipped with draining and venting nipples but the standard version cannot be totally drained. Please take this into consideration when specifying the freezing point of the heat transfer liquid.

The fan chambers are separated crosswise. The products are equipped with lifting lugs. Lifting instructions are shown in the drawings. When placing the products, please ensure that the air flow is neither obstructed nor re-circulated. If there are several coolers, you can reduce the spacing between units by installing them on a higher mounting base. Please check the placing of several coolers with our representative.

A manual including installation and service instructions is shipped with each unit.

Product designation

09GECAE-196-10 09-8-9-V-136DN65-D

09GE = Dry cooler
09LE = Condenser
CA = Coil material
E = Special model
196 = Size
10 = Number of fans
09 = Fan diameter
8 = Fan speed r/s
6 = 15.8 r/s 8 = 12.0 r/s
10 = 9.3 r/s 12 = 7.8 r/s
16 = 5.8 r/s
9 = Power supply
8 = 230 V-3 ph- 50 Hz
9 = 400 V-3 ph-50 Hz
Mounting position
V = vertical air flow
H = horizontal air flow

Additional markings for dry cooler 09GE:
136DN65
136 = Number of circuits
DN = Tube connection type
DN = Flange R = Outer thread
65 = Connection size

Options:
- D = Water spraying system
- S = Vibration dampers
- Ep = Epoxy coated aluminium fins
- F = Extra high legs (2.0 m)
- SC = Step control (see separate brochure)
- SVC = Fan speed control with frequency converter (see separate brochure)
- Sub = Sub cooling coil
- J = Multi-circuited condenser, number of passes from left to right / from up to down (J:1:2:1)

Fans

The axial fans are equipped with squirrel cage motors built according to IEC standards, with IP 54 standard degree of protection and class F insulation. The motors are provided with shaft seals and drainage holes. Allowed air outlet temperature on standard motors is at least +60 °C. Suitability for higher temperatures has to be checked separately. The motors are wired to the fans´ safety switches (IP 65) located near each fan.

The standard motors are suitable for 380 V-3 ph-50 Hz…420 V-3 ph-50 Hz. For other power supplies, the fans must be specified as special.

The fan power input at +20 °C is given in the performance data tables. The full load current is given at a temperature of –30 °C for specifying the overload protector. The current value changes according to air density. This data may also vary due to changes in motor types; therefore the overload protectors should have a +/–20 % adjusting margin.

To ensure the lifetime of the fans, they shall be started for at least 3…4 hours once a month.

Heat transfer capacities

The capacities, air flows, sound power levels and liquid pressure drop (dry cooler) shown in the Polar Power selection software and in the tables in this brochure have the Eurovent Certify-All certification, and are verified by tests (EN 1048, EN 327) in independent laboratories.

The performance data of the dry coolers are given for water +40/35 °C, air entering temperature +25 °C according to Eurovent, and for ethylene glycol 40 %, +42/36 °C, air entering temperature +27 °C.

The nominal heat transfer capacities of the condensers are given for refrigerant R404A, with temperature difference 15 K and air entering temperature +25 °C. The performance data is given at the sea level and with normal atmospheric pressure.

L_{wa} is the A-weighted sound power level [dB(A)]. The A-weighted sound pressure level L_{pa}[dB(A)] is given at fan deck height and at a distance of 10 meters from the end of the unit, with the unit in free field conditions over one reflective plane (hemispheric).

Selection

The preliminary product selection can be made by using the tables in this leaflet. The condenser capacities for the required refrigerant and temperature difference can be calculated with the help of the correction factors. The exact cooler selection and dry cooler dimensioning is made by Polar Power software, which is available on CD-rom.

The selection is based on required capacity, temperatures, noise level at desired point and refrigerant or liquid choice. The program gives the most suitable models with heat transfer capacities, connection data, noise levels by octave bands, operating cost calculations and dimensional drawings.

Performance data 09GE

Fan diameter 914 mm — Air on +25 °C, water +40/35 °C, EN 1048 — 400 V-3 ph-50 Hz

Fan speed		**5.8 r/s**				**7.8 r/s**				**9.3 r/s**				**12.0 r/s**				**15.8 r/s**			
Poles		**16**				**12**				**10**				**8**				**6**			
Power input		**0.35 kW**				**0.59 kW**				**0.75 kW**				**1.37 kW**				**3.10 kW**			
FLC (full load current)		**1.4 A**				**2.5 A**				**2.8 A**				**4.3 A**				**7.0 A**			
09GE	**Placing of fans**	**CAP kW**	**Flow m³/s**	**Lpa dB(A)**	**Lwa dB(A)**	**CAP kW**	**Flow m³/s**	**Lpa dB(A)**	**Lwa dB(A)**	**CAP kW**	**Flow m³/s**	**Lpa dB(A)**	**Lwa dB(A)**	**CAP kW**	**Flow m³/s**	**Lpa dB(A)**	**Lwa dB(A)**	**CAP kW**	**Flow m³/s**	**Lpa dB(A)**	**Lwa dB(A)**
34-2	1x2	64.4	5.32	36	68	85.4	7.62	44	76	96.2	8.82	48	80	118	11.4	54	86	147	15.7	61	93
38-2	1x2	67.9	5.00	36	68	92.2	7.15	44	76	105	8.36	48	80	132	10.8	54	86	164	15.0	61	93
50-3	1x3	98.8	7.98	38	70	130	11.4	46	78	146	13.3	49	82	180	17.0	55	87	219	23.5	61	95
60-3	1x3	104	7.50	38	70	142	10.7	46	78	161	12.5	49	82	199	16.2	55	87	247	22.4	61	95
68-4	1x4	129	10.6	39	71	172	15.1	47	79	193	17.7	50	83	238	22.8	56	89	288	31.4	63	96
78-4	1x4	140	10.0	39	71	185	14.3	47	79	210	16.6	50	83	263	21.5	56	89	327	29.9	63	96
82-5	1x5	167	13.3	39	72	222	18.9	47	80	251	22.1	51	84	292	28.4	57	90	375	39.2	64	97
98-5	1x5	175	12.5	39	72	239	17.8	47	80	272	20.9	51	84	341	27.0	57	90	424	37.4	64	97
104-6	2x3	199	16.0	40	73	264	22.7	48	81	298	26.5	52	85	367	34.1	58	90	446	47.0	65	98
116-6	2x3	209	15.0	40	73	290	21.4	48	81	331	25.0	52	85	407	32.4	58	90	505	44.9	65	98
136-8	2x4	270	21.3	41	74	359	30.3	49	82	405	35.3	53	86	499	45.3	58	92	589	62.7	66	99
152-8	2x4	283	20.0	41	74	385	28.5	49	82	439	33.3	53	86	552	43.2	58	92	686	59.8	66	99
174-10	2x5	340	26.6	42	75	453	37.8	50	83	464	44.2	53	87	572	56.6	59	93	737	78.3	66	100
196-10	2x5	356	25.0	42	75	486	35.8	50	83	555	41.9	53	87	635	54.0	59	93	830	74.8	66	100
208-12	2x6	411	31.9	42	76	502	45.4	50	84	566	52.7	54	88	697	68.4	59	93	843	94.1	67	101
234-12	2x6	430	30.0	42	76	587	43.0	50	84	618	50.2	54	88	772	64.8	59	93	958	89.7	67	101

Fan diameter 1240 mm

Fan speed		**5.8 r/s**				**7.8 r/s**				**9.3 r/s**				**12.0 r/s**			
Poles		**16**				**12**				**10**				**8**			
Power input		**1.10 kW**				**2.15 kW**				**3.23 kW**				**6.00 kW**			
FLC (full load current)		**6.2 A**				**7.5 A**				**11 A**				**17 A**			
09GE	**Placing of fans**	**CAP kW**	**Flow m³/s**	**Lpa dB(A)**	**Lwa dB(A)**	**CAP kW**	**Flow m³/s**	**Lpa dB(A)**	**Lwa dB(A)**	**CAP kW**	**Flow m³/s**	**Lpa dB(A)**	**Lwa dB(A)**	**CAP kW**	**Flow m³/s**	**Lpa dB(A)**	**Lwa dB(A)**
104-3	1x3	246	21.2	49	82	327	30.7	58	90	375	37.1	62	95	447	48.1	68	101
116-3	1x3	267	20.3	49	82	363	29.5	58	90	421	35.8	62	95	511	46.5	68	101
136-4	1x4	342	28.3	50	83	446	40.9	59	92	511	49.5	63	96	603	64.1	69	102
152-4	1x4	369	27.1	50	83	502	39.3	59	92	584	47.7	63	96	697	62.0	69	102
174-5	1x5	432	35.3	51	84	520	51.1	59	92	596	61.9	63	97	757	80.2	69	103
196-5	1x5	465	33.8	51	84	578	49.1	59	92	672	59.6	63	97	857	77.4	69	103
208-6	1x6	478	42.4	51	85	634	61.3	60	93	725	74.3	64	98	864	96.2	70	104
234-6	1x6	561	40.6	51	85	705	58.9	60	93	819	71.5	64	98	990	92.9	70	104

Capacities depend on the tubing. The exact capacity is given by the selection software.

CAP = Nominal capacity
Flow = Air flow
L_{pa} = Sound pressure level
L_{wa} = Sound power level

Performance data 09GE

Fan diameter 914 mm — Air on +27 °C, ethylene glycol 40 % +42/36 °C — 400 V-3 ph-50 Hz

Fan speed		**5.8 r/s**				**7.8 r/s**				**9.3 r/s**				**12.0 r/s**				**15.8 r/s**			
Poles		**16**				**12**				**10**				**8**				**6**			
Power input		**0.35 kW**				**0.59 kW**				**0.75 kW**				**1.37 kW**				**3.10 kW**			
FLC (full load current)		**1.4 A**				**2.5 A**				**2.8 A**				**4.3 A**				**7.0 A**			
09GE	**Placing of fans**	**CAP kW**	**Flow m³/s**	**Lpa dB(A)**	**Lwa dB(A)**	**CAP kW**	**Flow m³/s**	**Lpa dB(A)**	**Lwa dB(A)**	**CAP kW**	**Flow m³/s**	**Lpa dB(A)**	**Lwa dB(A)**	**CAP kW**	**Flow m³/s**	**Lpa dB(A)**	**Lwa dB(A)**	**CAP kW**	**Flow m³/s**	**Lpa dB(A)**	**Lwa dB(A)**
34-2	1x2	59.8	5.32	36	68	79.6	7.62	44	76	89.6	8.82	48	80	110	11.4	54	86	132	15.7	61	93
38-2	1x2	64.0	5.00	36	68	87.3	7.15	44	76	98.0	8.36	48	80	122	10.8	54	86	150	15.0	61	93
50-3	1x3	89.4	7.98	38	70	113	11.4	46	78	128	13.3	49	82	157	17.0	55	87	198	23.5	61	95
60-3	1x3	95.4	7.50	38	70	130	10.7	46	78	146	12.5	49	82	175	16.2	55	87	215	22.4	61	95
68-4	1x4	111	10.6	39	71	147	15.1	47	79	166	17.7	50	83	204	22.8	56	89	265	31.4	63	96
78-4	1x4	131	10.0	39	71	159	14.3	47	79	181	16.6	50	83	227	21.5	56	89	302	29.9	63	96
82-5	1x5	145	13.3	39	72	193	18.9	47	80	218	22.1	51	84	267	28.4	57	90	324	39.2	64	97
98-5	1x5	154	12.5	39	72	210	17.8	47	80	239	20.9	51	84	299	27.0	57	90	369	37.4	64	97
104-6	2x3	170	16.0	40	73	226	22.7	48	81	255	26.5	52	85	312	34.1	58	90	379	47.0	65	98
116-6	2x3	180	15.0	40	73	262	21.4	48	81	298	25.0	52	85	349	32.4	58	90	433	44.9	65	98
136-8	2x4	239	21.3	41	74	318	30.3	49	82	358	35.3	53	86	439	45.3	58	92	529	62.7	66	99
152-8	2x4	253	20.0	41	74	345	28.5	49	82	392	33.3	53	86	491	43.2	58	92	604	59.8	66	99
174-10	2x5	307	26.6	42	75	408	37.8	50	83	441	44.2	53	87	526	56.6	59	93	638	78.3	66	100
196-10	2x5	326	25.0	42	75	443	35.8	50	83	503	41.9	53	87	567	54.0	59	93	688	74.8	66	100
208-12	2x6	374	31.9	42	76	467	45.4	50	84	510	52.7	54	88	576	68.4	59	93	695	94.1	67	101
234-12	2x6	398	30.0	42	76	540	43.0	50	84	519	50.2	54	88	648	64.8	59	93	796	89.7	67	101

Fan diameter 1240 mm

Fan speed		**5.8 r/s**				**7.8 r/s**				**9.3 r/s**				**12.0 r/s**			
Poles		**16**				**12**				**10**				**8**			
Power input		**1.10 kW**				**2.15 kW**				**3.23 kW**				**6.00 kW**			
FLC (full load current)		**6.2 A**				**7.5 A**				**11 A**				**17 A**			
09GE	**Placing of fans**	**CAP kW**	**Flow m³/s**	**Lpa dB(A)**	**Lwa dB(A)**	**CAP kW**	**Flow m³/s**	**Lpa dB(A)**	**Lwa dB(A)**	**CAP kW**	**Flow m³/s**	**Lpa dB(A)**	**Lwa dB(A)**	**CAP kW**	**Flow m³/s**	**Lpa dB(A)**	**Lwa dB(A)**
104-3	1x3	228	21.2	49	82	302	30.7	58	90	323	37.1	62	95	383	48.1	68	101
116-3	1x3	235	20.3	49	82	337	29.5	58	90	366	35.8	62	95	441	46.5	68	101
136-4	1x4	300	28.3	50	83	396	40.9	59	92	453	49.5	63	96	538	64.1	69	102
152-4	1x4	326	27.1	50	83	442	39.3	59	92	513	47.7	63	96	620	62.0	69	102
174-5	1x5	385	35.3	51	84	494	51.1	59	92	565	61.9	63	97	667	80.2	69	103
196-5	1x5	419	33.8	51	84	512	49.1	59	92	586	59.6	63	97	695	77.4	69	103
208-6	1x6	457	42.4	51	85	520	61.3	60	93	595	74.3	64	98	701	96.2	70	104
234-6	1x6	511	40.6	51	85	672	58.9	60	93	678	71.5	64	98	815	92.9	70	104

Capacities depend on the tubing. The exact capacity is given by the selection software.

CAP = Nominal capacity
Flow = Air flow
L_{pa} = Sound pressure level
L_{wa} = Sound power level

Dimensional drawings

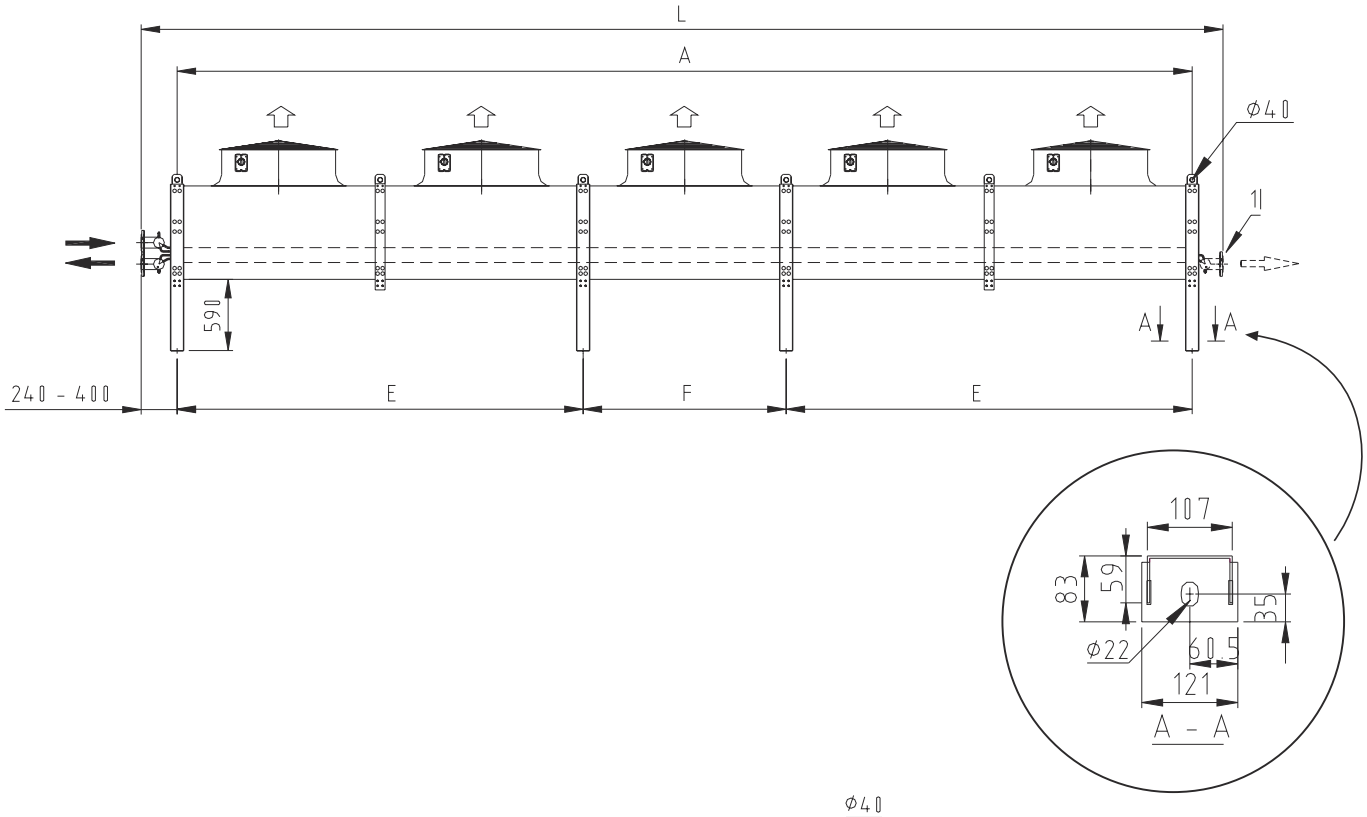

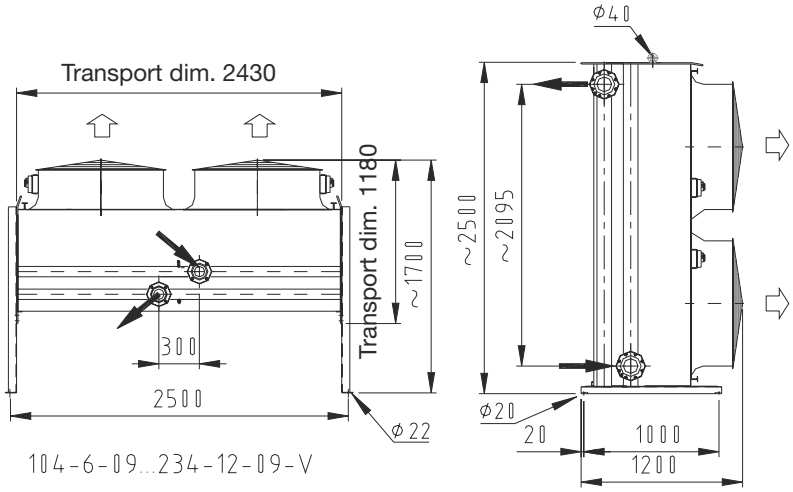

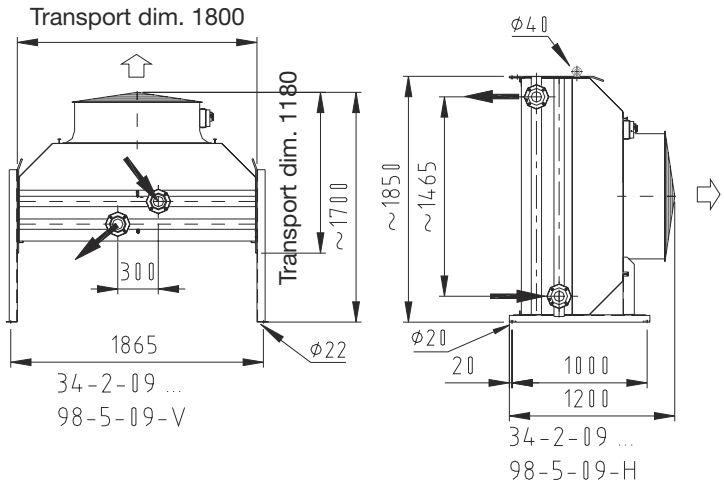

Condenser tube connection sizes

	Ø 914 / 5.8 r/s			Ø 914 / 7.8 r/s Ø 1240 / 5.8 r/s			Ø 914 / 9.3 r/s Ø 1240 / 7.8 r/s			Ø 914 / 12.0 r/s Ø 1240 / 9.3 r/s			Ø 914 / 15.8 r/s Ø 1240 / 12.0 r/s		
09LE	**Gas**	**Liquid**	**No. of circuits**	**Gas**	**Liquid**	**No. of circuits**	**Gas**	**Liquid**	**No. of circuits**	**Gas**	**Liquid**	**No. of circuits**	**Gas**	**Liquid**	**No. of circuits**
34-2	35	28	15	42	35	15	42	35	15	42	35	15	42	35	15
38-2	35	28	14	42	35	14	42	35	14	42	35	20	54	42	20
50-3	42	35	15	42	35	15	54	42	25	54	42	25	63	54	25
60-3	42	35	20	42	35	20	54	42	25	54	42	25	63	54	25
68-4	54	42	25	54	42	25	54	42	25	63	54	25	63	54	37
78-4	54	42	25	54	42	25	63	54	33	63	54	33	63	54	33
82-5	54	42	25	63	54	25	63	54	37	63	54	37	63	54	37
98-5	63	54	33	63	54	33	63	54	33	63	54	50	63	54	50
104-6	63	54	34	63	54	34	63	54	34	63	54	50	76	63	50
116-6	63	54	45	63	54	45	63	54	45	63	54	45	76	63	68
136-8	63	54	34	63	54	50	63	54	50	76	63	50	76	63	68 [1]
152-8	63	54	45	63	54	68	76	63	68	76	63	68	2x63	2x54	68
174-10	63	54	50	76	63	68 [1]	76	63	68 [1]	76	63	68 [1]	2x63	2x54	68 [1]
196-10	63	54	68	76	63	68	76	63	68	2x63	2x54	68	2x63	2x54	90 [1]
208-12	63	54	68 [1]	76	63	68 [1]	2x63	2x54	68 [1]	2x63	2x54	68 [1]	2x76	2x63	100
234-12	76	63	68	76	63	90 [1]	2x63	2x54	90 [1]	2x76	2x63	90 [1]	2x76	2x63	134

Dimensions and weights

09LE/GE				**Max. length**	**Fixing points**	**NW**	**IV** [2]	**SA**	**Water spraying system D**	
	A [mm]	**E [mm]**	**F [mm]**	**L [mm]** [1]		**[kg]**	**[l]**	**[m²]**	**WF [l/min. 3 bar]**	**TC ø [mm]**
34-2	2240	2240	-	3040	4	480	50	291	1.4	15
38-2	2240	2240	-	3040	4	510	70	388	1.4	15
50-3	3360	3360	-	4160	4	680	70	437	2.1	15
60-3	3360	3360	-	4160	4	730	100	583	2.1	15
68-4	4480	2240	-	5280	6	900	100	583	2.8	15
78-4	4480	2240	-	5280	6	970	120	777	2.8	15
82-5	5600	2240	1120	6400	8	1120	120	728	3.5	15
98-5	5600	2240	1120	6400	8	1210	150	971	3.5	15
104-6	4950	4950	-	5750	4	1360	140	875	4.2	2x15
116-6	4950	4950	-	5750	4	1460	180	1167	4.2	2x15
136-8	6600	3300	-	7400	6	1780	180	1167	5.6	2x15
152-8	6600	3300	-	7400	6	1920	240	1557	5.6	2x15
174-10	8250	3300	1650	9050	8	2210	230	1459	7.0	2x15
196-10	8250	3300	1650	9050	8	2400	300	1945	7.0	2x15
208-12	9900	3300	3300	10700	8	2650	270	1751	8.4	2x15
234-12	9900	3300	3300	10700	8	2850	360	2334	8.4	2x15

1) Connections on both ends
2) Internal volume with maximum header size

SA = Surface area
IV = Internal volume
WF = Water flow
TC = Tube connection
NW = Net weight

Location

V-model

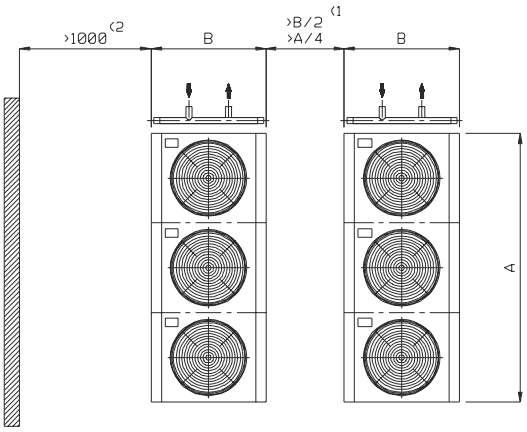

1) Recommended service space min. 600 mm. If there are only two condensers, the narrow models (B= 1.85 m) may also be installed side by side. Check the leg height and, if necessary, install the equipment on a stage.
2) If the wall is lower than the equipment, the min. distance is B/2 or A/4, minimum 600 mm.

H-model

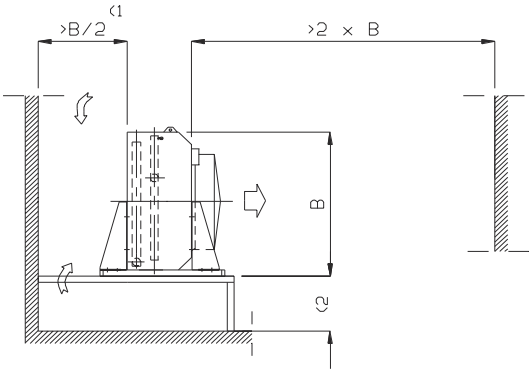

1) Recommended service space min. 600 mm.
2) The installation stage under the equipment shall be open e.g. because of snow.

Lifting

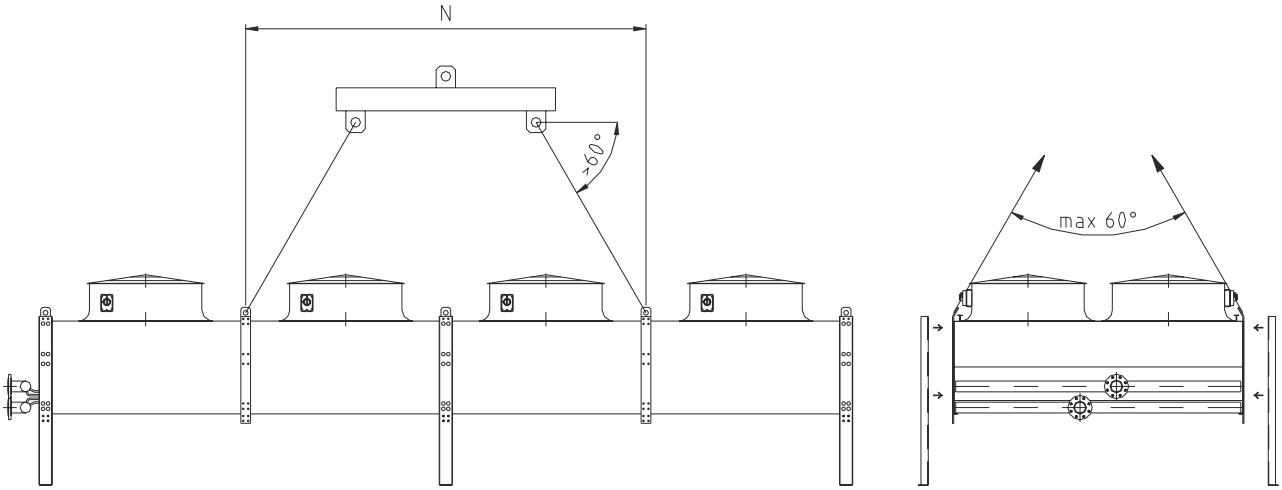

09LE/GE	N (mm)
34…38	2240
50…60	3360
68…78	4480
82…98	3360
104…116	4950
136…152	3300
174…196	4950
208…234	3300

Carrier
A member of the United Technologies Corporation Family.

Carrier Fnc ECR, Vantaa, Finland
Tel. +358 9 894 41
Order No. 10404-04, February 2003, supersedes No. 10404-04, May 1999.
Subject to changes without prior notice.
The cover photo is solely for illustration purposes, and is not contractually binding.

Printed on Totally Chlorine Free Paper.
Printed in Finland.