MODENA - ITALY

C.M. S.p.A.

SURFACE TREATMENT

OPERATING AND MAINTENANCE MANUAL

Model "Monorail M/1500" Blast Cleaning Machine

380V/220V/50Hz

SPECIFICATIONS AND CONSUMPTION

C.M. S.p.A.

SURFACE TREATMENT

VIA DELLA TECNICA N° 50 MODENA - ITALY

MODEL MONORAIL M/1500			DATE 1990
380V	3 PHASE	50Hz	FULL LOAD AMPS. 64.83
FULL-LOAD HP 38.51			FULL-LOAD KW. 28.60
ELECTRICAL DIANGRAM N° 090015095			SERIAL NUMBER S3370
MAX MOTOR AMPS. 15.2			ELECTRICAL STANDARD IEC
CIRCUIT BREAKER CAPACITY AMPS 100			

1.3. Electrical characteristics

CIRCUIT CHARACTERISTICS

(TABLE 1)

LINE FEED TENSION (U)	LINE CURRENT (I)		Imax (breakaway)		FEED CABLE (A)	CIRCUIT BREAKER (I)	TOTAL INSTALLED POWER OUTPUT HP		TOTAL INSTALLED POWER OUTPUT KW		FULL-LOAD HP		FULL-LOAD KW	
VOLT 220	SLOW	AMP. 100.2	SLOW	AMP. 177.8	mm² 35	AMP. 160	SLOW	FAST	SLOW	FAST	SLOW	FAST	SLOW	FAST
	FAST	AMP. 112.1	FAST	AMP. 244.8	AWG									
VOLT 380	SLOW	AMP. 57.93	SLOW	AMP. 102.8	mm² 25	AMP. 100	32.21	38.51	23.80	28.60	32.21	38.51	23.80	28.60
	FAST	AMP. 64.83	FAST	AMP. 141.5	AWG									

CHARACTERISTICS OF THE CONTROL PANEL ELECTRICAL HARDWARE AND ELECTRICAL INPUT TO EACH MOTOR

(TABLE 2)

MOTORS		R.P.M.	FRAME	POWER (P) HP	POWER (P) KW	cos φ	AVERAGE CALCULATED VALUES OF FULL-LOAD CURRENTS (I) VOLT 220	AVERAGE CALCULATED VALUES OF FULL-LOAD CURRENTS (I) VOLT 380	Imax breakaway AMP. V220 / V380	THREE POLE CIRCUIT BREAKER AND THERMAL OVERLOAD RELAYS	VOLT 220	VOLT 380	CONTACTOR		AUXILIARY CONTACT	COIL RATINGS (S) STARTING	COIL RATINGS (S) OPERATING	CABLE AREA mm²	CABLE AREA AWG
BLOWER		2930	B3	10	7.5	0.87	AMP. 26.2	AMP. 15.2	201.7 / 117.0	Q7	24A TO 32A	10A TO 16A	K1M	3TB4317-0A	2o	78	12	6	
ELEVATOR		1410	B5	1.5	1.1	0.81	AMP. 4.84	AMP. 2.8	24.20 / 14.00	Q2	4A TO 6A	2.4A TO 4A	K2M	3TB4017-0A	2o	76	12	1.5	
TRANSVERSAL ABRASIVE RECOVERY SCREW		1400	B5	0.75	0.55	0.80	AMP. 2.54	AMP. 1.47	11.93 / 6.90	Q3	2.4A TO 4A	1A TO 1.6A	K3M	3TB4017-0A	2o	76	12	1.5	
LONGITUDINAL ABRASIVE RECOVERY SCREW		1400	B5	1	0.75	0.80	AMP. 3.37	AMP. 1.95	16.85 / 9.75	Q4	2.4A TO 4A	1.6A TO2. 4A	K4M	3TB4017-0A	2o	76	12	1.5	
HOOK ROTATION CW		900	B5	1.5	1.1	0.75	AMP. 5.4	AMP. 3.1	22.14 / 12.71	Q5	6A TO 10A	2.4A TO 4A	K5M1	3TB4012-0A	1o+1c	76	12	1.5	
HOOK ROTATION CCW													K5M2	3TB4012-0A	1o+1c	76	12		
LOWER BLASTWHEEL	SLOW	960	B3	5.6	4.1	0.72	AMP. 18.5	AMP. 10.7	96.20 / 55.64	F9Q	16A TO 25A	10A TO 16A	K6M2	3TB4212-0A	1o+1c	78	12	2.5	
	FAST	1455		7.7	5.7	0.83	AMP. 22.5	AMP. 13.0	155.2	Q6	24A TO 32A	16A TO 25A	K6M1	3TB4212-0A	1c	76	12	4	
	FAST								89.70	F8Q	16A TO 25A	10A TO 16A	K6M3	3TB4117-0A	2o+1c	78	12	4	
CENTRAL BLASTWHEEL	SLOW	960	B3	5.6	4.1	0.72	AMP. 18.5	AMP. 10.7	96.20 / 55.64	F11Q	16A TO 25A	10A TO 16A	K7M2	3TB4212-0A	1o+1c	78	12	2.5	
	FAST	1455		7.7	5.7	0.83	AMP. 22.5	AMP. 13.0	155.2	Q8	24A TO 32A	16A TO 25A	K7M1	3TB4212-0A	1c	76	12	4	
	FAST								89.70	F10Q	16A TO 25A	10A TO 16A	K7M3	3TB4117-0A	2o+1c	78	12	4	
UPPER BLASTWHEEL	SLOW	960	B3	5.6	4.1	0.72	AMP. 18.5	AMP. 10.7	96.20 / 55.64	F13Q	16A TO 25A	10A TO 16A	K8M2	3TB4212-0A	1o+1c	78	12	2.5	
	FAST	1455		7.7	5.7	0.83	AMP. 22.5	AMP. 13.0	155.2	Q9	24A TO 32A	16A TO 25A	K8M1	3TB4212-0A	1c	76	12	4	
	FAST								89.70	F12Q	16A TO 25A	10A TO 16A	K8M3	3TB4117-0A	2o+1c	78	12	4	
							AMP.	AMP.											
TRANSFORMER				500VA			AMP. 2.27	AMP. 1.31											

4. Control pushbutton control board

4.1. Settings

TYPE OF COMMAND	INITIALS	PLATE LABEL	COMMAND	SIGNAL
MAINS POWER SUPPLY ON	Q1M		KNOB	
SETS SAND BLASTING TIME	KIT	BLASTING TIME		DISPLAY
SETS AUXILIARY CIRCUIT CUT IN	S4	0 -1	KEY	GREEN LED **H1** LIGHTS
SETS BLASTWHEEL SLOW OR FAST RUNNING	S9	SLOW/FAST	KEY	
SETS HOOK ROTATION FOR CLOCKWISE OR COUNTERCLOCKWISE	S18	CLOCKWISE/ COUNTERCLOCK WISE	LEVER	WHITE **H10** OR YELLOW **H11** LED LIGHTS
SETS BLASTWHEEL JET TEST	S19	JET TEST	KEY	WHEN LED **H8** LIGHTS THE SELECTOR SWITCH IS ON "1"
SETS THE MACHINE UP FOR AUTOMATIC OR MANUAL MODE	S20	AUTOMATIC/MANUAL	LEVER	THE RED **H21** OR WHITE **H9** LED LIGHTS
SETS UP MACHINE FOR GRIT FEED TEST OR ADJUSTMENT	S22		LEVER	

TYPE OF COMMAND	INITIALS	PLATE LABEL	COMMAND	SIGNAL
DISPLAY GATE VALVE POSITION		IMPULSES/ ADDRESSES		**P6H** DISPLAY LIT
END BLASTING CYCLE		END BLASTING		VISUAL/ACOUSTIC SIGNAL **H4**
PROBLEMS		BLASTING GRIT MIN. LEVEL, BLASTING GRIT MAX. LEVEL		**H2** AND **H3** RED LED FLASHES
PROBLEMS		CIRCUIT BREAKER TRIPS		**H5** YELLOW LED FLASHES
PROBLEMS		EMERGENCY IN BLASTING CHAMBER		**H5** YELLOW LED FLASHES RAPIDLY

4.2. Start up (manual)

TYPE OF COMMAND	INITIALS	PLATE LABEL	COMMAND	SIGNAL
START UP AUXILIARY GROUPS AND INDIVIDUAL TAKE OFFS	S5E	ON	BLACK BUTTON	WHITE LEDS **H6**, **H7** AND **H8** LIGHT
DOOR PISTON DRIVES	S21	OPEN/CLOSE DOORS	LEVER	WHEN WHITE LEDS **H6**, **H7**, **H8** ARE LIT AND LIMIT SWITCH **S3Q** TRIPPED. WHITE LED **H10** OR YELLOW LED **H11** LIGHTS.
BEGIN BLAST CYCLE	S10, S11, S12	AUTOMATIC, ON, CUT OUT	LEVER	WHITE LEDS **H13**, **H15, H17** LIGHT OR **H12**, **H14**, **H16** RED LEDS AND **H18**, **H19** AND **H20** WHITE LEDS.

4.3. Starting up (automatic)

TYPE OF COMMAND	INITIALS	PLATE LABEL	COMMAND	SIGNAL
START UP AUXILIARY GROUPS AND INDIVIDUAL TAKE OFFS	S5E	ON	BLACK BUTTON	**H6**, **H7** AND **H8** WHITE LEDS LIGHT
START BLAST CYCLE	S8E	CYCLE ON	BLACK BUTTON	SIREN ON **H4** (CONTINUOUS)

4.4. Cycle stop

TYPE OF COMMAND	INITIALS	PLATE LABEL	COMMAND	SIGNAL
MAIN SWITCH	S1E	EMERGENCY	RED EMERGENCY STOP BUTTON	

4.5. Regulations

TYPE OF COMMAND	INITIALS	PLATE LABEL	COMMAND	SIGNAL
BLAST GRIT FEED RATE	S14	INCREASE / DECREASE	LEVER	

4.6. Signaling

TYPE OF COMMAND	INITIALS	PLATE LABEL	COMMAND	SIGNAL
CONTROL CIRCUIT POWERED UP		MAINS		GREEN LED **H1** LIT
SET WORKING MODE		AUTOMATIC/MANUAL		RED LED **H21** OR WHITE LED **H9** LIT
		ASPIRATOR, ELEVATOR, CROSS SCREW FEED, LENGTHWISE SCREW FEED		**H6**, **H7**, **H8** WHITE LEDS LIT
MACHINE READY		CYCLE START		SIREN **H4** ON (CONTINUOUS)
BLAST CYCLE RUNNING		HOOK CLOCKWISE ROTATION, HOOK COUNTERCLOCKWISE ROTATION, BOTTOM BLASTWHEEL, BOTTOM GRIT FEED, CENTER BLASTWHEEL, CENTER GRIT FEED, TOP BLASTWHEEL, TOP GRIT FEED		**H10** (OR **H11** YELLOW) **H13**, **H15**, **H17** (OR RED **H12**, **H14**, **H16**) **H18**, **H19**, **H20** WHITE LEDS LIT
CYCLE TIME		BLAST TIME		**K1T** DISPLAY LIT FOR COUNT
BLASTWHEEL MOTOR POWER DRAW CHECK		BOTTOM BLASTWHEEL LOAD, CENTER BLASTWHEEL LOAD, TOP BLASTWHEEL LOAD		**P2H**, **P3H** AND **P4H** LIT TO SIGNAL
CHECK MAINS POWER DRAW		MAIN LOAD		**P1H** LIT TO SIGNAL
BLASTING HOUR COUNTER		HOUR COUNTER		**PH5** WORKING

4.6. Maximum allowable blastwheels motor amperage

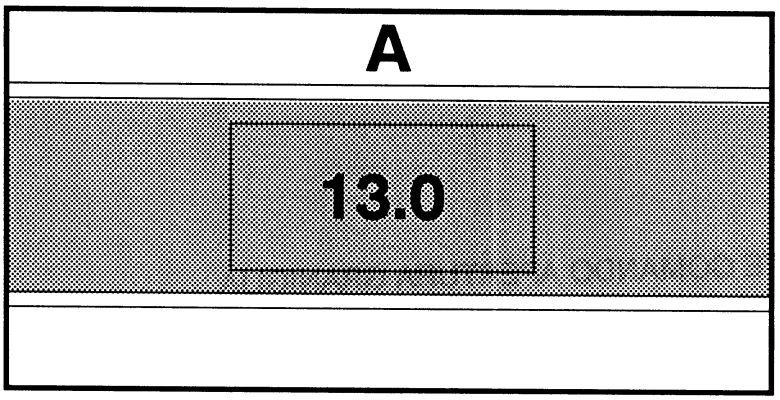

- FAST -

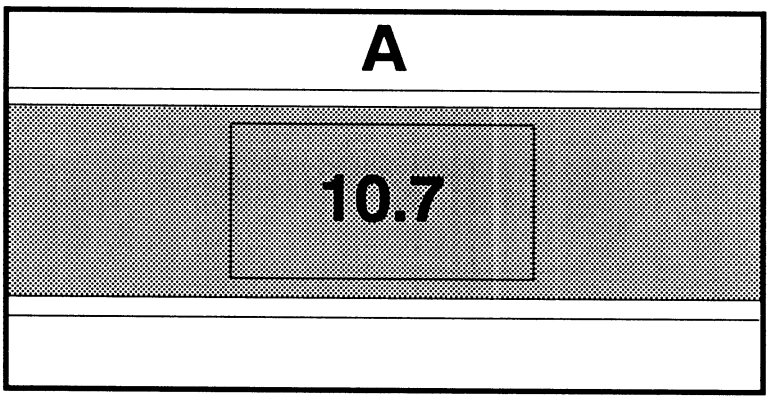

- SLOW -

4.6. Maximum allowable blastwheels motor amperage

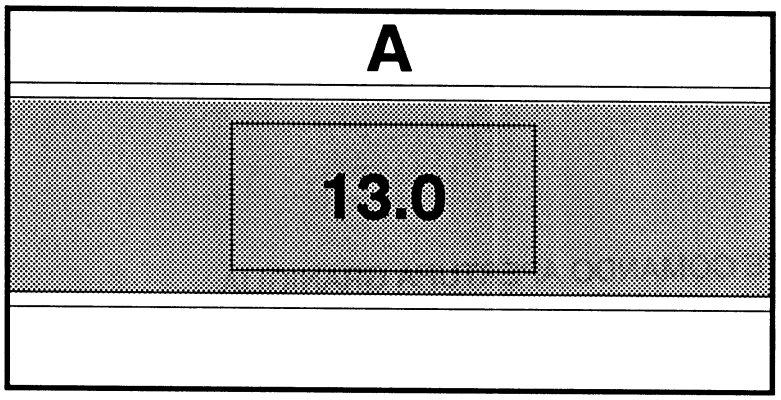

- FAST -

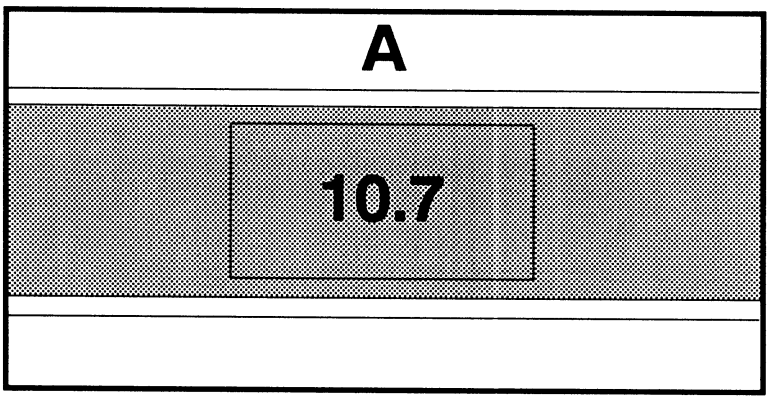

- SLOW -

4.7. Control pushbutton control board

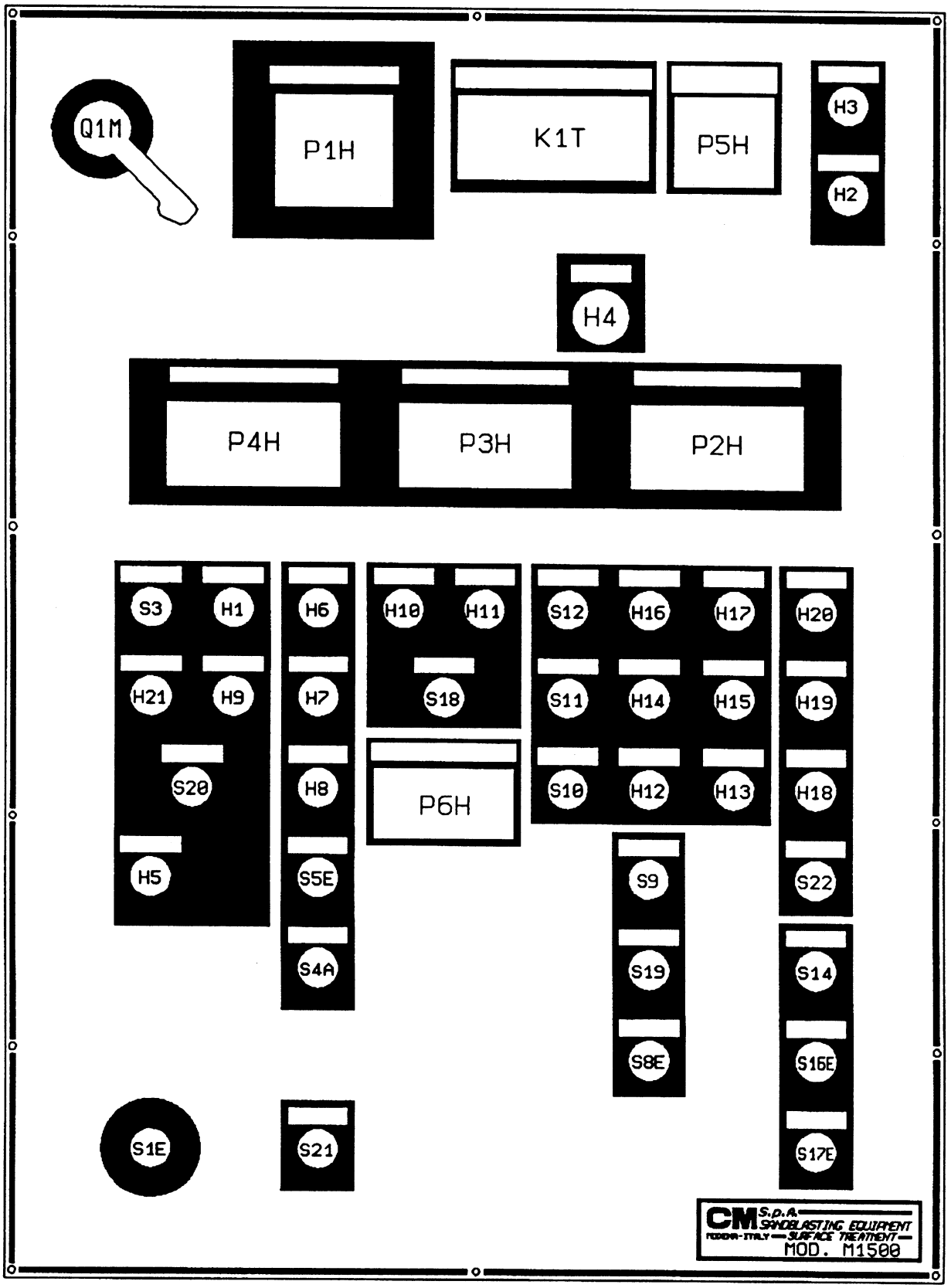

CONTROL PUSHBUTTON CONTROL BOARD - LEGEND

H1 – CIRCUIT ENERGIZED

H2 – ABRASIVE MINIMUM LEVEL

H3 – ABRASIVE MAXIMUM LEVEL

H4 – ELECTRONIC AUDIBLE AND VISUAL WARNING SIGNAL (END BLASTING CYCLE AND CYCLE START)

H5 – – MANUAL MOTOR STARTERS INTERVENTION

⎍ MAX. OPENING DOORS TIME

⎍⎍ EMERGENCY OPENING OF LOAD DOORS

H6 – BLOWER MOTOR RUNNING

H7 – ELEVATOR MOTOR RUNNING

H8 – FEED SCREW MOTOR RUNNING

H9 – MANUAL MODE

H10 – HOOK ROTATION (CLOCKWISE) MOTOR RUNNING

H11 – HOOK ROTATION (COUNTERCLOCKWISE) MOTOR RUNNING

H12 – LOWER BLASTWHEEL (SLOW) MOTOR RUNNING

H13 – LOWER BLASTWHEEL (FAST) MOTOR RUNNING

H14 – CENTRAL BLASTWHEEL (SLOW) MOTOR RUNNING

H15 – CENTRAL BLASTWHEEL (FAST) MOTOR RUNNING

H16 – UPPER BLASTWHEEL (SLOW) MOTOR RUNNING

H17 – UPPER BLASTWHEEL (FAST) MOTOR RUNNING

H18 – LOWER ABRASIVE ELECTROMAGNET ON

H19 – CENTRAL ABRASIVE ELECTROMAGNET ON

H20 – UPPER ABRASIVE ELECTROMAGNET ON

H21 – AUTOMATIC MODE

K1T – BLASTING CYCLE TIMER

P1H – AMMETER CIRCUIT AMPERAGE

P2H – LOWER BLASTWHEEL AMMETER

P3H – CENTRAL BLASTWHEEL AMMETER

P4H – UPPER BLASTWHEEL AMMETER

P5H – HOUR-COUNTER

P6H – DIGITAL DISPLAY MODULE

Q1M – OPERATING HANDLE (CIRCUIT BREAKER) WITH DOOR INTERLOCK

S1E – EMERGENCY STOP PUSHBUTTON

S3 – SELECTOR SWITCH FOR ENERGIZE CIRCUIT

S4A – STOP PUSHBUTTON (BLOWER, ELEVATOR, SCREWS)

S5E – START PUSHBUTTON (BLOWER, ELEVATOR, SCREWS)

S8E – CYCLE START PUSHBUTTON

S9 – VELOCITY SELECTOR SWITCH (SLOW OR FAST)

S10 – SELECTOR SWITCH FOR INSERTION OR ELIMINATION OF LOWER BLASTWHEEL

S11 – SELECTOR SWITCH FOR INSERTION OR ELIMINATION OF CENTRAL BLASTWHEEL

S12 – SELECTOR SWITCH FOR INSERTION OR ELIMINATION OF UPPER BLASTWHEEL

S14 – SELECTOR SWITCH FOR SELECTING "OPENING" ABRASIVE FEED (INCREASE OR DECREASE)

S16E – START PUSHBUTTON (ADDRESSES)

S17E – START PUSHBUTTON (MEMORIZING DATA)

S18 – SELECTOR SWITCH FOR SETTING THE HOOK ROTATION CLOCKWISE, COUNTER-CLOCKWISE OR AUTOMATIC

S19 – SELECTOR SWITCH FOR BLAST PATTERN TEST

S20 – SELECTOR SWITCH "MANUAL" AND "AUTOMATIC" MODES

S21 – SELECTOR SWITCH FOR OPENING AND CLOSING LOAD DOORS

S22 – SELECTOR SWITCH FOR ABRASIVE FEED GATE (LOWER, CENTRAL OR UPPER) SELECTION

5. STARTING THE MACHINE

STEP	PROCEDURE
1	Turn the main switch **(Q1M)** to ON. The power **ON** LED **(H1)** lights.
2	Set the blasting time required on the **"BLAST TIME" (K1T)** timer.
3	Press the **"RUN"** button **(S2E)** to start up motor **(M1)**. The **"ASPIRATOR"** LED **(H2)** will light and the contactor **(K1M)** is energized.
4	Load the workpieces to be blasted; press the lighted button **"CYCLE DOOR RELEASE" (S62)**. Motors **(M1)**, **(M2)** and **(M3)** will start, the electromagnet **(Y2)** will be deenergized and the door will lock. Electromagnet **(Y1)** will be energized and command the blasting grit supply gate to open and the blasting time will start.
5	When the blasting cycle has ended, the acoustic signal **(H10)** will announce that the doors are unlocked and can be opened to remove the workpieces which have been blasted.
6	Press the **"IN CYCLE" (S5E)** button if you want to pulse rotate the platform (with the doors open) to facilitate load/unload operations.
7	Press the **"IN CYCLE"** button **(S6E)** or the **"IN CYCLE"** button **(S5E)** on the machine to start a new work cycle (once the workpieces have been loaded into the blasting chamber and the doors closed).
8	If necessary, the platform can be put in continuous rotation by pressing **"IN CYCLE"** button **(S6E)** with the doors open. Press button **(S5E)** to stop this rotation.

- **OPERATING THE MACHINE**

A) Supply the compressed air line with compressed air at a min. pressure of 5 bar.
When there is compressed air in the circuit, the line pressure switch **(B2F)** switches.

B) Switch the control board on by turning the main switch **(Q1M)** to ON and use the key selector switch **(S3)** to turn on the auxiliary line.

C) Button **(S5E)** turns on the motors for the aspirator **(M1)**, elevator **(M2)**, screen screwfeed **(M3)** and blasting chamber screwfeed **(M4)**.

D) Selector switch **(S20)** allows you to select one of the two working modes: manual or automatic.
E) Use selector switch **(S9)** to set blastwheel speed: 1 = low; 2 = high.
Select one of the ten programmed blast grit feed rate settings with the pushbutton **(S16E)** (the grit feed rate programming is covered in a specific section of the manual).

- **MANUAL MODE**

Once the hook is inside the blasting chamber, selector **(S21)** can be used of shut or open the doors.
Once the doors are closed, selector switch **(S10)** is used to turn on the bottom blastwheel **(M6)**, selector switch **(S11)** for the center blastwheel **(M7)** and selector switch **(S12)** for the top blastwheel **(M8)**.
As soon as each blastwheel reaches its operating speed, the corresponding grit supply gate opens **(Y12, Y13, Y14)** and the blasting countdown starts.
The blasting cycle time is set with the timer **(K1T)** on the control panel. The same can be set for the specific blasting job to be done.
Once the time set on the timer **(K1T)** has elapsed, the grit feeds close **(Y12, Y13 and Y14)** and the blastwheels shut down. When the blastwheels have freewheeled to a stop, an beeping signal is generated at the control board to inform the operator that the blasting chamber doors can be opened.
Selector **(S21)** is used to open the doors and the hooks exit the chamber. By repeating the work procedure sequence described above, another blasting cycle can be started.

- **AUTOMATIC MODE**

Follow the steps outlined in points **A), B), C), D)** and **E)** above.
Move the hook into the blasting chamber and press the Cycle Start button **(S8E)** on the control panel or **(S13E)** over by the monorail. A continuous acoustic signal tells you that the machine is ready to start work.
Hit the Cycle Start button **(S8E)** or **(S13E)** again and the following sequence starts: the doors close, the bottom blastwheel **(M6)** starts, its grit supply **(Y12)** opens. Sequentially, the center blastwheel **(M7)** and its grit supply **(Y13)** and the top blastwheel **(M8)** and its grit supply **(Y14)** also start up and/or open.
Once the blasting time set with timer **(K1T)** has elapsed, the grit feeds **(Y12, Y13, Y14)** close and the blastwheel motors **(M6, M7, M8)** shut down.
After about 30 seconds (time for the blastwheels to freewheel to a stop), the doors open, hook rotation motor **(M5)** shuts down and the end cycle beeping signal is given.
Once the finished workpieces have been removed, a new cycle can be started by bring the hook into the blasting chamber and pressing the Cycle start button **(S8E)** or **(S13E)**. The Cycle start button will only have to be hit once in this case.

- **HOW TO PROGRAM THE BLASTING GRIT FEED RATE**

The blastwheels should be running: use the selector switch **(S13E)** to select the grit feed you want to regulate.
Turn the blastwheel ON, the grit feed will open and you will get the blastwheel load readout display (blastwheel load amperometer).
There are 10 addresses (from 1-10) for the two speeds for each grit feed. These can be selected step by step with the pushbutton **(S16E)**. (These addresses are displayed on the left of the control board display.)
Once you have set the address you want, when the selector switch **(S14)** is turned, the servomotor opens or closes the grit feed spout for the blastwheel by increasing or decreasing the power draw of the blastwheel being regulated (displayed on the appropriate amperometer).
During the grit feed open-close stage, impulses are sent to the PLC. These increase as it opens and decrease as it closes to reach zero when the gate is completely shut. The impulse scrolling is displayed on the right of the usual display unit.
Once you have reached the feed rate you want, memorize it with the appropriate button **(S17E)**.
Move on to the next address and use this same procedure to memorize other feed rates up to a maximum of 10 addresses.
Repeat this procedure for the second and third blastwheel and for both blastwheel running speeds.

N.B. If you change any feed rate without memorizing it, if the electric control board is switch off and then on again, the servomotor will always return to the previously memorized setting.

If you have to change a servomotor because it is jammed or defective, follow these steps:
- install the new servomotor but do not connect it up (the servomotor is packed completely closed and therefore in the zero setting).
- Move to any handy address and set the servomotors for the working blastwheels to zero by means of the "DECREASE" **(S15E)** button.
- use a piece of wire stripped at both ends as a jumper at the PLC input **(A1)** between the +24 V on the PLC and N. 24 on the PLC. This resets the addresses for all three servomotors including the one that was jammed.
- removed the jumper and connect up the servomotor by slipping on the connectors.

This restores it to normal working condition. If necessary, rememorize the lost data in the address used for this resetting.

If there is an accidental short circuit in the PLC inputs, the memorized data will be completely erased and therefore the servomotors will go out of phase.
Follow these steps to recommission them:
- the blastwheels should be running and the chain stopped.
- remove the top caps from the servomotors and remove the starter motor simply by removing the bracket attaching it to the gear motor.
- use button **(S13E)** to reach the grit feed position you intend to work on.
- One person should depress the "DECREASE" button **(S15E)** on the control board while a second person turns the servomotor gear by hand in the closing direction until the display shows a zero setting.
- Take your finger off the button and turn the gear until the grit spout is really closed.
- Check the spout closed position by simulating by hand the electromagnet attraction.
- As soon as these steps have been done, replace the starter motor and replace the servomotor cap. If necessary silicone any parts that seem not be be perfectly sealed against dust.

- **AIR CIRCULATING FAN**

The electric cabinet has two fans **(M9)** and **(M10)**. They cut in automatically by means of the thermostat **(B1F)** inside the cabinet. Optimum thermostat setting is 35°C.

IMPORTANT NOTICE

IF THERE IS A BREAKDOWN, PRESS BUTTON **(S1E)** OR **(S2E)** ON THE MACHINE TO HALT THE WORK CYCLE IMMEDIATELY.

CHECK TO MAKE SURE THAT THE GRIT FEED OPENINGS ARE UNOBSTRUCTED ALONG THEIR ENTIRE LENGTH; CHECK ALSO THAT THEY DO NOT TOUCH OR ARE SUBJECTED TO MECHANICAL RESISTANCE.

CHECK THE BLASTWHEEL LOAD CONTROL AMPEROMETERS. DEPENDING ON THE MAINS LOAD, THEY SHOULD NEVER EXCEED MAX. ALLOWABLE DRAW.

■ SPECIAL INFORMATION

Door control during the opening and closing stages can only take place under low pressure conditions. Door opening and closing time is controlled from the moment the command is given until the doors reach the end travel position.
If this time is exceeded due to any type of obstruction or jam, the door involved with stop its movement and lock in a position opposite the direction it was moving in.
The indicator light **(H5)** will flash slowly.

There is a lighted emergency stop pushbutton panel **(S23)** inside the blasting chamber. When this is pressed, the doors are immediately opened and lock in the open position. The **(H5)** indicator light flashes rapidly to identify the fact that the emergency button has been pushed.

If a motor overheats the overload cutout will trip. This is signalled by indicator light **(H5)** coming on.

Whenever a safety trips (once the cause of the problem has been removed), normal operation can be reset by hitting the Cycle Start button **(S8)**.
The signal shuts off to show that the cycle has been reset.

- **JET TEST**

A blastwheel jet can only be tested in **"Manual"** mode.
Once the blasting chamber has been set up as outlined in the mechanical chapters of this Manual, turn on the aspirator, the elevator, the screen screwfeed and the chamber screwfeed using the appropriate buttons.
Turn the jet test keyed selector switch **(S19)** to "1" and keep it in this setting for the entire test. Close the doors (with selec tor **(S21)**). Set the test time (30-60 seconds) on the timer **(K1T).** Turn on the blastwheel you want to test with selector **(S10)**, **(S11)** or **(S12)**.

Once the blasting time has elapsed and the blastwheel freewheeled to a stop, turn the jet test selector **(S19)** off, open the doors and check the results of the test.
Follow these procedures to test the other blastwheels as needed.

- **IMPULSE FILTER**

The filter section of the filter consists of 4 cartridges. These cartridges are cleaned cyclically with an air jet while the machine is running.
The impulse time (the time the solenoid is energized) and the pause time (time between one impulse and the next), can be set with two timers marked **K2T** and **K3T** inside the electric control board. These timers, **(K2T)** and **(K3T),** are connected with a programmable sequencer which controls the solenoids **(Y6)**, **(Y7)**, **(Y8)**, **(Y9)**, **(Y10)** and **(Y11)** for washing the 4 cartridges.

■ GENERAL RECOMMENDATIONS

- Average compressed air (6 Bar) consumption is around 4 m^3/h.
- Optimum working pressure should be regulated at around 6-7 bar.
- The compressed air supply should be dehumidified and all impurities (dust, oil etc.) should be filtered out. Min. filter fineness, 50 micron.
- Since the filter has a storage tank, it is sufficient to connect it up with a line having an inside 10 mm diameter.
- After each 8 work hours, with the fan OFF, allow the cartridges to be washed for at least 15 minutes.
- Consult pp. 1-8 of the mechanical section of this Manual for additional technical specifications and further assembly, operating and trouble shooting information.

- **PROGRAMMABLE CONTROLLER (A1)**

The PLC is working normally when the green LED at the top right of the PLC lights and stays on. If other indicator lights come on (e.g. battery, etc.) refer to the information given in the PLC maintenance manual.

- **PROGRAMMABLE CONTROLLER STATUS DISPLAY**

The self-diagnostic which is always carried out, continuosly displays programmable controller status by menas of the 4 LEDS on the front panel.

	ON/OFF LED ●	FLASHING LED ●
RUN ● ○ STOP ●	PROGRAMMABLE CONTROLLER IN RUN	PROGRAMMABLE CONTROLLER IN STOP
CPU ● ○ PROG ●	CPU ERROR	WATCH DOG ERROR
I/O ● ○ MEM ●	INPUT/OUTPUT ERROR	MEMORY RAM ERROR
BATT ● ○	BATTERY PROBLEM	

- AUTOMATIC MEDIA FLOW CONTROL ASSEMBLY - cod. 080476027

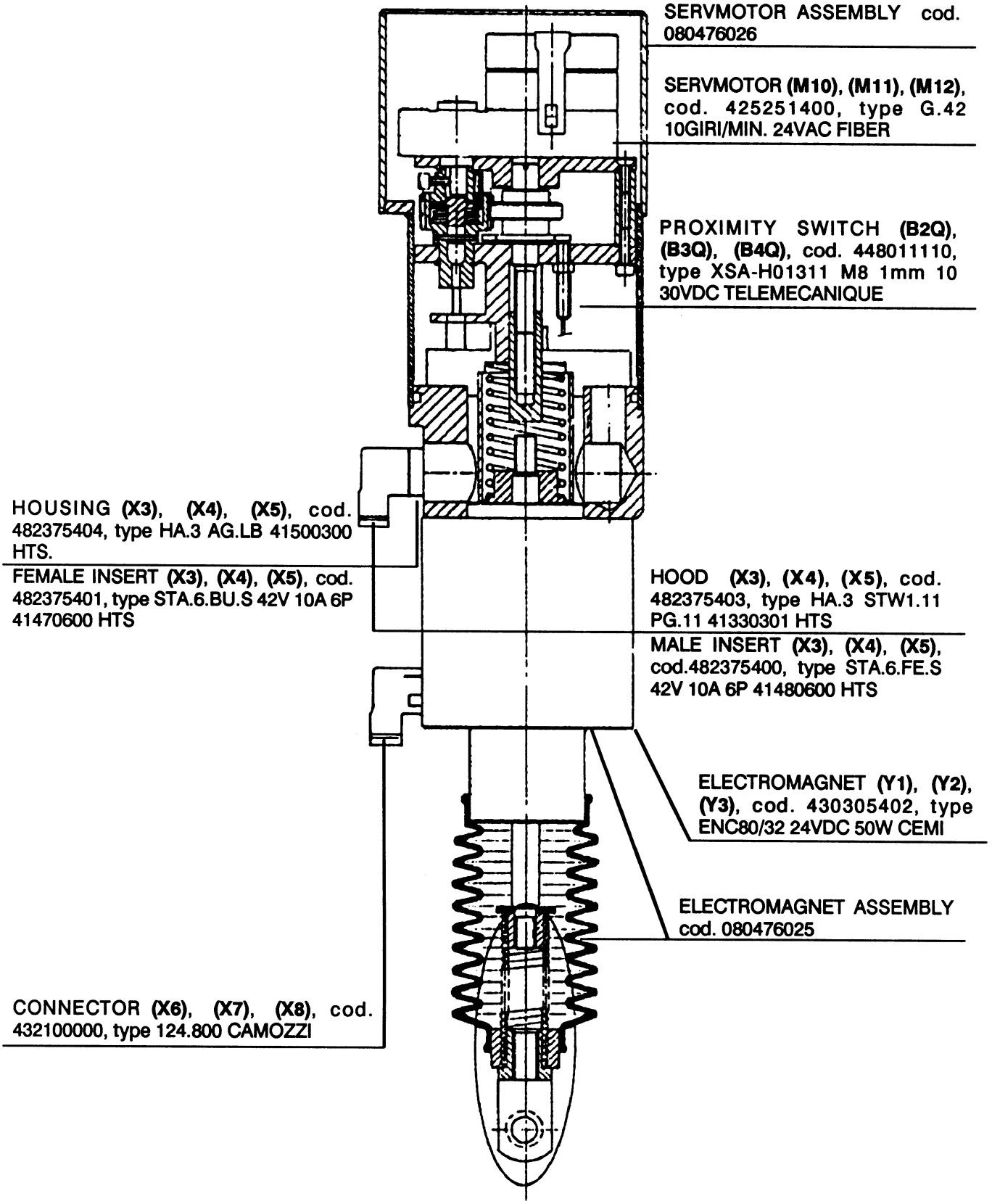

8. TROUBLE SHOOTING GUIDE

TROUBLE	CAUSE	CURE
The miniature circuit-breaker on the transformer primary disconnects when the line is connected.	Several coils in the primary winding of the transformer are short circuited.	Check the state of the winding and replace the transformer if necessary.
The miniature circuit breaker on the transformer secondary disconnects.	There is a short circuit, and ethed wire or the coil of a connector has short-circuited turns in the secondary circuit.	Check the auxiliary circuit insulation and correct electrical continuity. Change the short circuited coil if necessary.
After a certain period of work time, the manual motor starter trips.	Line voltage is too low or too and so causes overvoltage in the motor. As a result the manual motor starter voltage will be at its max. carry.	Increase the setting or change to next highest setting. Follow the suggestions in table 2.
A motor overheats and the manual motor starter intervenes.	Insufficient ventilation, power supply phase failure, mechanical overload, the motor bearings have hardened.	Check the state of the cooling fan by removing the casing on the part opposite the shaft exit. Check the state of the fuses and that they are well clamped. Check the connections and correct continuity of the power cables (concerning the motor in question), disconnect the motor power supply inside the terminal box and check the three input voltages. Eliminate any causes of possible abnormal mechanical resistance to movement, using an amperometer to check that the power input does not exceed the indications on the motor data plate in question.

TROUBLE	CAUSE	CURE
An energized contactor vibrates.	The coil power supply connections are not well clamped. A foreign body or dust has entered the equipment; the mobile equipment fails to perfectly rest on the pole pieces of the fixed devices; the mobile equipment meets abnormal resistance to movement. The damping coil is damaged or broken.	Check that the wires supplying power to the coil are well clamped. Clean the air core of the two devices. Eliminate all friction to which the movement of the mobile part may be subjected.
The contactor fails to connect when the push button is pressed (although the lamp sometimes switches on).	The manual motor starter has operated, the contactor coil is broken or the terminals have slackened. A wire on the stop push button makes a bad contact, a push button clamp has oxidized or has blocked during operation.	Reset the manual motor starter. Check the coil terminals. If power is not supplied to the coil, check correct electrical continuity on the push buttons and contacts above the coil. Check the electrical continuity of the coil; change the coil if there is no continuity.
The contactor closes when the push button is pressed but fails to remain closed.	The self-retaining contact has moved from its housing.	Reset by repositioning the contact.
The blastwheel fails to start.	See the previous general instructions. The proximity switches are not activated.	Check the proximity switch operated by the doors; adjust or replace as necessary.
The blastwheel starts even when the doors are open.	The proximity switch remains activated even when there is no closing door.	Open the device and repair any damage as necessary (slackened part, short circuited wires, etc..). Replace the proximity switch if necessary.

TROUBLE	CAUSE	CURE
By operating the key switch to set the machine in line, the relative line light on the panel fails to switch on.	Ther is no air in the pneumatic circuit; the magnetothermic protection of the primary or secondary is not in the closed position; the door of the electric panel fails to sufficiently close and does not influence the closed door limit switch which disconnects line voltage, cutting off the main valve or line contactor.	Check that there is compressed air in the circuit at the correct pressure (4 atm.), thus able to close the pressure switch and enable line connection. Set the protection switches on the transformer input and output to the closed position. Check that the closing of the electric panel door operates the door closed micro and shim the door if necessary.
The sandblasting machine doors fails to open and close.	The safety pressure set by the adjuster (on the pneunatic panel) is too low; the time controlling door opening- closing is too short and thus blocks the safety devices, locking the doors from the opposite part from whence they were called. The flow governors on the pistons are too closed and do not enable compressed air relief.	Increase the safety pressure by turning the adjuster in a clockwise direction (1.5-2 atm.). Remove any hardening from the doors, check the pistons are correctly lubrificated, increase the opening-closing time. Open the adjuster screw on the unidirectional flow governors until door movement has been adjusted.
The doors move too quickly.	The compressed air pressure is too high; the flow governors are excessively open.	Set working pressure (via the governor) to the correct value (1.5-2 atm.). Screw the flow governors until the correct door working speed is achieved.
The doors shut too hard when they reach the closing position or at end of travel during the opening phase.	The piston brakes are excessively open.	Adjust piston end of travel braking to the correct value by tightening the relative screws on the heads to the correct point.

9.14. List of electrical spare parts

C.M. S.P.A. SPARE PARTS MODENA IL 25.01.90

PRODOTTO: 090015095 M1500 380 220 50 SPEC. IN/IN NR.INT. 21192

PAG. 1

MARKING-	DENOMINATION	-CODE	CM-QTA
A1	-PROGRAMMABLE CONTROLLER TYPE TSX1723428F V110 TO V240	-096500035-	1
	-22 INPUTS-12 OUTPUTS TELEMECANIQUE	- -	
A1	-LITHIUM BATTERY TYPE TSX17ACC1 0,1A TELEMECANIQUE	-096500038-	1
A1	-SOFTWARE CARTRIDGE TYPE PL7.2 TSXP1720FA TELEMECANIQUE	-096500040-	1
A1	-MEMORY CARTRIDGE TYPE TSXMC70E224 3K BYTES	-096500041-	1
	-TELEMECANIQUE	- -	
A1/A2	-CABLE TYPE TSXCBB009 0,9MT TELEMECANIQUE	-096500046-	1
A2	-EXTENSION MODULE TYPE TSX-DMF342 22INPUTS-12OUTPUTS	-096500045-	1
	-TELEMECANIQUE	- -	
A3	-EXTENSION MODULE TYPE TSX-DSF635 6OUTPUTS TELEMACANIQUE	-096500036-	3
A3	-END OF LINE ADAPTOR TYPE TSX17ACC10 TELEMECANIQUE	-096500047-	1
A4-A5	-FULL-WAVE RECTIFIER TYPE RS-T18 S0081.87 WEIDMULLER	-484320000-	2
A6	-FULL-WAVE RECTIFIER TYPE RS-T18 S0081.87 WEIDMULLER	-484320000-	1
A7/S1Q	-THREE PHASE FLASHING SAFETY UNIT TYPE ASL3 460V ELFIN	-445144000-	1
B1F	-THERMOSTAT TYPE SK3112 +15° TO +45° RITTAL	-482120019-	1
B10Q	-PROXIMITY SWITCH TYPE XSC-H157339 15MM 12 A 48VCC	-448061160-	1
	-TELEMECANIQUE	- -	
B11Q	-PROXIMITY SWITCH TYPE XSC-H157339 15MM 12 A 48VCC	-448061160-	1
	-TELEMECANIQUE	- -	
B12Q	-PROXIMITY SWITCH TYPE XSC-H157339 15MM 12 A 48VCC	-448061160-	1
	-TELEMECANIQUE	- -	
B13K	-PROGRAMMABLE SEQUENCER TYPE 096035000 C.M.	-096035000-	1
B14F	-VACUUM GAUGE TYPE 0 TO 800MM/H_2O DIAM.60 1/4" TERMAF	-335620000-	1
B15F	-VACUUM GAUGE TYPE 0 TO 800MM/H_2O DIAM.60 1/4" TERMAF	-335620000-	1
B2F	-PRESSURE SWITCH TYPE XMJ-A0207 MIN.2BAR-MAX.18BAR 1/4"	-336042004-	1
	-TELEMECANIQUE	- -	
B6H-B7H	-LEVEL PROBE TYPE 095000034 C.M.	-095000034-	2
B8F	-PRESSURE SWITCH TYPE 0 TO 10BAR 1/8" 1NO SUCO	-336042001-	1
B9Q	-PROXIMITY SWITCH TYPE XSC-H157339 15MM 12 A 48VCC	-448061160-	1
	-TELEMECANIQUE	- -	
F1	-MINIATURE CIRCUIT-BREAKER TYPE FAZG10 10A SINGLE-POLE	-440220016-	1
	-KLOCKNER&MOELLER	- -	
F10Q	-THERMAL OVERLOAD RELAY TYPE 3UA5200-2A 10A TO 16A	-442300233-	1
	-SIEMENS	- -	
F11Q	-THERMAL OVERLOAD RELAY TYPE 3UA5200-2A 10A TO 16A	-442300233-	1
	-SIEMENS	- -	
F12Q	-THERMAL OVERLOAD RELAY TYPE 3UA5200-2A 10A TO 16A	-442300233-	1
	-SIEMENS	- -	
F13Q	-THERMAL OVERLOAD RELAY TYPE 3UA5200-2A 10A TO 16A	-442300233-	1
	-SIEMENS	- -	
F2	-MINIATURE CIRCUIT-BREAKER TYPE FAZG0,5 0,5A SINGLE-POLE	-440220015-	1
	-KLOCKNER&MOELLER	- -	
F3	-MINIATURE CIRCUIT BREAKER TYPE FAZG2 2A SINGLE-POLE	-440220012-	1
	-KLOCKNER&MOELLER	- -	
F4	-MINIATURE CIRCUIT BREAKER TYPE FAZG4-2 4A DOUBLE-POLE	-440202033-	1
	-KLOCKNER&MOELLER	- -	
F5-F6	-MINIATURE CIRCUIT-BREAKER TYPE FAZG0,5 0,5A SINGLE-POLE	-440220015-	2
	-KLOCKNER&MOELLER	- -	
F7-F8	-MINIATURE CIRCUIT BREAKER TYPE FAZG4 4A SINGLE-POLE	-440220014-	2
	-KLOCKNER&MOELLER	- -	
F8Q-F9Q	-THERMAL OVERLOAD RELAY TYPE 3UA5200-2A 10A TO 16A	-442300233-	2
	-SIEMENS	- -	
F9	-MINIATURE CIRCUIT BREAKER TYPE FAZG4 4A SINGLE-POLE	-440220014-	1
	-KLOCKNER&MOELLER	- -	
H1	-LENS TYPE ZB2-BV03 DIAM.22 TELEMECANIQUE	-445180200-	1
H1	-PILOT LAMP TYPE ZB2-BV4 LAMP BA9S 6V TELEMECANIQUE	-445183000-	1
H10	-LENS TYPE ZB2-BV07 DIAM.22 TELEMECANIQUE	-445180300-	1
H10	-PILOT LAMP TYPE ZB2-BV6 LAMP BA9S 24V TELEMECANIQUE	-445181000-	1
H11	-LENS TYPE ZB2-BV05 DIAM.22 TELEMECANIQUE	-445180400-	1

C.M. S.P.A. SPARE PARTS MODENA IL 25.01.90

PRODOTTO: 090015095 M1500 380 220 50 SPEC. IN/IN NR.INT. 21192

MARKING-	DENOMINATION	-CODE	CM-QTA
H11	-PILOT LAMP TYPE ZB2-BV6 LAMP BA9S 24V TELEMECANIQUE	-445181000-	1
H12-H14	-PILOT LAMP TYPE XVL-A334 24VCC RED TELEMECANIQUE	-445271501-	2
H13	-LENS TYPE ZB2-BV07 DIAM.22 TELEMECANIQUE	-445180300-	1
H13	-PILOT LAMP TYPE ZB2-BV6 LAMP BA9S 24V TELEMECANIQUE	-445181000-	1
H15	-LENS TYPE ZB2-BV07 DIAM.22 TELEMECANIQUE	-445180300-	1
H15	-PILOT LAMP TYPE ZB2-BV6 LAMP BA9S 24V TELEMECANIQUE	-445181000-	1
H16	-PILOT LAMP TYPE XVL-A334 24VCC RED TELEMECANIQUE	-445271501-	1
H17-H18	-LENS TYPE ZB2-BV07 DIAM.22 TELEMECANIQUE	-445180300-	2
H17-H18	-PILOT LAMP TYPE ZB2-BV6 LAMP BA9S 24V TELEMECANIQUE	-445181000-	2
H19-H20	-LENS TYPE ZB2-BV07 DIAM.22 TELEMECANIQUE	-445180300-	2
H19-H20	-PILOT LAMP TYPE ZB2-BV6 LAMP BA9S 24V TELEMECANIQUE	-445181000-	2
H2-H3	-LENS TYPE ZB2-BV04 DIAM.22 TELEMECANIQUE	-445180500-	2
H2-H3	-PILOT LAMP TYPE ZB2-BV6 LAMP BA9S 24V TELEMECANIQUE	-445181000-	2
H21	-LENS TYPE ZB2-BV04 DIAM.22 TELEMECANIQUE	-445180500-	1
H21	-PILOT LAMP TYPE ZB2-BV6 LAMP BA9S 24V TELEMECANIQUE	-445181000-	1
H4	-ELECTRONIC AUDIBLE AND VISUAL WARNING SIGNAL	-489007003-	1
	-TYPE BIP84 24VAC ELECTRA	- -	
H5	-LENS TYPE ZB2-BV05 DIAM.22 TELEMECANIQUE	-445180400-	1
H5	-PILOT LAMP TYPE ZB2-BV6 LAMP BA9S 24V TELEMECANIQUE	-445181000-	1
H6-H7	-LENS TYPE ZB2-BV07 DIAM.22 TELEMECANIQUE	-445180300-	2
H6-H7	-PILOT LAMP TYPE ZB2-BV6 LAMP BA9S 24V TELEMECANIQUE	-445181000-	2
H8	-LENS TYPE ZB2-BV07 DIAM.22 TELEMECANIQUE	-445180300-	1
H8	-PILOT LAMP TYPE ZB2-BV6 LAMP BA9S 24V TELEMECANIQUE	-445181000-	1
H9	-LENS TYPE ZB2-BV07 DIAM.22 TELEMECANIQUE	-445180300-	1
H9	-PILOT LAMP TYPE ZB2-BV6 LAMP BA9S 24V TELEMECANIQUE	-445181000-	1
K1A-K2A	-RELAY TYPE HC4 24VAC NATIONAL	-444012140-	2
K1A-K2A	-SOCKET TYPE HC4-SFD NATIONAL	-444400040-	2
K1M	-CONTACTOR TYPE 3TB43 17-0AMO 220V-50HZ SIEMENS	-442051213-	1
K1T	-TIMER TYPE E56-F31-R04 220V-50HZ 59MIN.-59SEC. FIBER	-443051301-	1
K2M-K3M	-CONTACTOR TYPE 3TB40 17-0AMO 220V-50HZ SIEMENS	-442051202-	2
K2T-K3T	-TIME DELAY RELAY TYPE BAR12 0,06SEC. TO 160SEC.24V	-443125200-	2
	-SYRELEC	- -	
K3A-K4A	-RELAY TYPE HC4 24VAC NATIONAL	-444012140-	2
K3A-K4A	-SOCKET TYPE HC4-SFD NATIONAL	-444400040-	2
K4M	-CONTACTOR TYPE 3TB40 17-0AMO 220V-50HZ SIEMENS	-442051202-	1
K5M1	-CONTACTOR TYPE 3TB40 12-0AMO 220V-50HZ SIEMENS	-442051201-	1
K5M2	-CONTACTOR TYPE 3TB40 12-0AMO 220V-50HZ SIEMENS	-442051201-	1
K6M1	-CONTACTOR TYPE 3TB42 12-0AMO 220V-50HZ SIEMENS	-442051207-	1
K6M2	-CONTACTOR TYPE 3TB42 12-0AMO 220V-50HZ SIEMENS	-442051207-	1
K6M3	-CONTACTOR TYPE 3TB41 17-0AMO 220V-50HZ SIEMENS	-442051205-	1
K7M1	-CONTACTOR TYPE 3TB42 12-0AMO 220V-50HZ SIEMENS	-442051207-	1
K7M2	-CONTACTOR TYPE 3TB42 12-0AMO 220V-50HZ SIEMENS	-442051207-	1
K7M3	-CONTACTOR TYPE 3TB41 17-0AMO 220V-50HZ SIEMENS	-442051205-	1
K8M1	-CONTACTOR TYPE 3TB42 12-0AMO 220V-50HZ SIEMENS	-442051207-	1
K8M2	-CONTACTOR TYPE 3TB42 12-0AMO 220V-50HZ SIEMENS	-442051207-	1
K8M3	-CONTACTOR TYPE 3TB41 17-0AMO 220V-50HZ SIEMENS	-442051205-	1
M9-M10	-METAL MESH FILTER TYPE 96-125 ETRI	-427100030-	2
M9-M10	-FELT TYPE 119X119 ETRI	-427200015-	4
M9-M10	-AXIAL FAN TYPE 125XR01 220V ETRI	-427344200-	2
M9-M10	-FINGER-GUARDS TYPE 9601-43 ETRI	-427500001-	2
PAG.	-MEDIA FLOW CONTROL ASSEMBLY TYPE 080476027 C.M.	-080476027-	3
POS.016	-REGULATING FILTER TYPE FR1/2" 5350224230 F=50MICRO	-335042400-	1
	-R=0,5 TO 10BAR WESTINGHOUSE	- -	
POS.017	-PRESSURE GAUGE TYPE 0 TO 12BAR 1/8" DIAM.43MM CAMOZZI	-335410002-	1
POS.020	-SPEED REGULATOR TYPE RSW1/4" CAMOZZI	-336002000-	1
POS.021	-SPEED REGULATOR TYPE RSW1/4" CAMOZZI	-336002000-	1
POS.022	-PNEUMATIC CYLINDER TYPE 5226034250 BORE 25 STROKE 25	-330708000-	1
	-WESTINGHOUSE	- -	
POS.022	-FEET TYPE 5226031004 WESTINGHOUSE	-330900300-	1

C.M. S.P.A. SPARE PARTS MODENA IL 25.01.90

PRODOTTO: 090015095 M1500 380 220 50 SPEC. IN/IN NR.INT. 21192

MARKING-	DENOMINATION	-CODE	CM-QTA
POS.023-	CONTROL VALVE TYPE 3610500600 DN7 0,1 TO 7,1 CONN.M14	-336028000-	1
	-WESTINGHOUSE	- -	
POS.023-	RING NUT TYPE 1/007992 WESTINGHOUSE	-336050010-	1
POS.023-	CONTROL TYPE 4/310159 WESTINGHOUSE	-336050011-	1
POS.024-	PRESSURE GAUGE TYPE 0 TO 6BAR DIAM.43MM CONN.1/8"	-335410005-	1
	-CAMOZZI	- -	
POS.027-	SILENCER TYPE 2921 1/4" CAMOZZI	-336012000-	1
POS.028-	SILENCER TYPE 2921 1/4" CAMOZZI	-336012000-	1
POS.029-	PNEUMATIC CYLINDER TYPE 4/506040 BORE 100 STROKE 200	-330208125-	1
	-WESTINGHOUSE	- -	
POS.029-	CLEVIS TYPE 4/304693 80/100 CETOP WESTINGHOUSE	-331000019-	1
POS.029-	HINGED TYPE 5220663402 100 CETOP WESTINGHOUSE	-331040011-	1
POS.030-	FLOW REGULATOR WITH CHECK VALVE TYPE SCU-606 6-1/4"	-336022003-	1
	-CAMOZZI	- -	
POS.031-	FLOW REGULATOR WITH CHECK VALVE TYPE SCU-606 6-1/4"	-336022003-	1
	-CAMOZZI	- -	
POS.038-	PNEUMATIC CYLINDER TYPE 4/506040 BORE 100 STROKE 200	-330208125-	1
	-WESTINGHOUSE	- -	
POS.038-	CLEVIS TYPE 4/304693 80/100 CETOP WESTINGHOUSE	-331000019-	1
POS.038-	HINGED TYPE 5220663402 100 CETOP WESTINGHOUSE	-331040011-	1
POS.039-	FLOW REGULATOR WITH CHECK VALVE TYPE SCU-606 6-1/4"	-336022003-	1
	-CAMOZZI	- -	
POS.040-	FLOW REGULATOR WITH CHECK VALVE TYPE SCU-606 6-1/4"	-336022003-	1
	-CAMOZZI	- -	
P1H	-AMMETER TYPE VJ4086 0 TO 150A 220V VEMER	-451312150-	1
P2H-P3H	-AMMETER TYPE DGP96.3 0 TO 50/5A 110V-220V IME	-451342130-	2
P4H	-AMMETER TYPE DGP96.3 0 TO 50/5A 110V-220V IME	-451342130-	1
P5H	-HOUR COUNTER TYPE TH13 220V NATIONAL	-452111510-	1
P6H	-DIGITAL DISPLAY MODULE TYPE TSX17ACC2 TELEMECANIQUE	-096500044-	1
Q1M	-CIRCUIT BREAKER TYPE NZMH6-100/NA+NHI002 100A	-440200155-	1
	-KLOCKNER&MOELLER	- -	
Q1M	-HANDLE TYPE RH6 KLOCKNER&MOELLER	-440500036-	1
Q1M	-TRIP TYPE A220/50 KLOCKNER&MOELLER	-440500039-	1
Q1M	-SAFETY TRIPPING DEVICE TYPE A-NZM6 KLOCKNER&MOELLER	-440500043-	1
Q10	-MINIATURE CIRCUIT BREAKER TYPE FAZG4-2 4A DOUBLE-POLE	-440202033-	1
	-KLOCKNER&MOELLER	- -	
Q2	-MANUAL MOTOR STARTER TYPE PKZM1-4 2,4A TO 4A	-440200164-	1
	-KLOCKNER&MOELLER	- -	
Q2	-TERMINAL COVER TYPE H-PKZM1 KLOCKNER&MOELLER	-440500050-	1
Q2	-AUXILIATY CONTACT TYPE NHI11-PKZM1 KLOCKNER&MOELLER	-440500051-	1
Q3	-MANUAL MOTOR STARTER TYPE PKZM1-1,6/USA 1A TO 1,6A	-440200162-	1
	-KLOCKNER&MOELLER	- -	
Q3	-TERMINAL COVER TYPE H-PKZM1 KLOCKNER&MOELLER	-440500050-	1
Q3	-AUXILIATY CONTACT TYPE NHI11-PKZM1 KLOCKNER&MOELLER	-440500051-	1
Q4	-MANUAL MOTOR STARTER TYPE PKZM1-2,4/USA 1,6A TO 2,4A	-440200163-	1
	-KLOCKNER&MOELLER	- -	
Q4	-TERMINAL COVER TYPE H-PKZM1 KLOCKNER&MOELLER	-440500050-	1
Q4	-AUXILIATY CONTACT TYPE NHI11-PKZM1 KLOCKNER&MOELLER	-440500051-	1
Q5	-MANUAL MOTOR STARTER TYPE PKZM1-4 2,4A TO 4A	-440200164-	1
	-KLOCKNER&MOELLER	- -	
Q5	-AUXILIARY CONTACT TYPE NHI10-PKZM1 KLOCKNER&MOELLER	-440500045-	1
Q5	-TERMINAL COVER TYPE H-PKZM1 KLOCKNER&MOELLER	-440500050-	1
Q5	-AUXILIATY CONTACT TYPE NHI11-PKZM1 KLOCKNER&MOELLER	-440500051-	1
Q6	-MANUAL MOTOR STARTER TYPE PKZ2/ZM-25 16A TO 25A	-440200196-	1
	-KLOCKNER&MOELLER	- -	
Q6	-AUXILIARY CONTACT TYPE NHI22-PKZ2 KLOCKNER&MOELLER	-440500068-	1
Q7	-MANUAL MOTOR STARTER TYPE PKZ2/MZ-16 10A TO 16A	-440200195-	1
	-KLOCKNER&MOELLER	- -	
Q7	-AUXILIARY CONTACT TYPE NHI11-PKZ2 KLOCKNER&MOELLER	-440500067-	1

C.M. S.P.A. SPARE PARTS MODENA IL 25.01.90

PRODOTTO: 090015095 M1500 380 220 50 SPEC. IN/IN NR.INT. 21192

MARKING-	DENOMINATION	-CODE	CM-QTA
Q8-Q9	-MANUAL MOTOR STARTER TYPE PKZ2/ZM-25 16A TO 25A	-440200196-	2
	-KLOCKNER&MOELLER	- -	
Q8-Q9	-AUXILIARY CONTACT TYPE NHI22-PKZ2 KLOCKNER&MOELLER	-440500068-	2
S1E	-CONTACT BLOCK TYPE ZB2-BZ101 TELEMECANIQUE	-445150004-	1
S1E	-OPERATOR TYPE ZB2-BS64 DIAM.22 TELEMECANIQUE	-445160011-	1
S10-S11	-CONTACT BLOCK TYPE ZB2-BZ105 TELEMECANIQUE	-445150010-	2
S10-S11	-SELECTOR SWITCH TYPE ZB2-BD7 DIAM.22 TELEMECANIQUE	-445170032-	2
S12	-CONTACT BLOCK TYPE ZB2-BZ105 TELEMECANIQUE	-445150010-	1
S12	-SELECTOR SWITCH TYPE ZB2-BD7 DIAM.22 TELEMECANIQUE	-445170032-	1
S13E	-PUSHBUTTON TYPE XB2-BA21 DIAM.22 TELEMECANIQUE	-445160000-	1
S14	-AUXILIARY CONTACT TYPE ZB2-BE101	-445150000-	1
	-TELEMECANIQUE	- -	
S14	-CONTACT BLOCK TYPE ZB2-BZ101 TELEMECANIQUE	-445150004-	1
S14	-KNOB TYPE ZB2-BD5 DIAM.22 TELEMECANIQUE	-445170009-	1
S16E	-PUSHBUTTON TYPE XB2-BA21 DIAM.22 TELEMECANIQUE	-445160000-	1
S17E	-PUSHBUTTON TYPE XB2-BA21 DIAM.22 TELEMECANIQUE	-445160000-	1
S18	-AUXILIARY CONTACT TYPE ZB2-BE101	-445150000-	1
	-TELEMECANIQUE	- -	
S18	-CONTACT BLOCK TYPE ZB2-BZ101 TELEMECANIQUE	-445150004-	1
S18	-KNOB TYPE ZB2-BD3 DIAM.22 TELEMECANIQUE	-445170008-	1
S19	-CONTACT BLOCK TYPE ZB2-BZ101 TELEMECANIQUE	-445150004-	1
S19	-SELECTOR SWITCH TYPE ZB2-BG6 DIAM.22 TELEMECANIQUE	-445170007-	1
S2E	-CONTACT BLOCK TYPE ZB2-BZ101 TELEMECANIQUE	-445150004-	1
S2E	-OPERATOR TYPE ZB2-BS54 DIAM.22 TELEMECANIQUE	-445160013-	1
S2Q	-MICROSWITCH TYPE M80 ELFIN	-447132000-	1
S20	-AUXILIARY CONTACT TYPE ZB2-BE101	-445150000-	1
	-TELEMECANIQUE	- -	
S20	-AUXILIARY CONTACT TYPE ZB2-BE102 TELEMECANIQUE	-445150001-	1
S20	-SELECTOR SWITCH TYPE XB2-BD21 DIAM.22 TELEMECANIQUE	-445170011-	1
S21	-AUXILIARY CONTACT TYPE ZB2-BE101	-445150000-	1
	-TELEMECANIQUE	- -	
S21	-CONTACT BLOCK TYPE ZB2-BZ101 TELEMECANIQUE	-445150004-	1
S21	-KNOB TYPE ZB2-BD5 DIAM.22 TELEMECANIQUE	-445170009-	1
S22	-AUXILIARY CONTACT TYPE ZB2-BE101	-445150000-	1
	-TELEMECANIQUE	- -	
S22	-AUXILIARY CONTACT TYPE ZB2-BE102 TELEMECANIQUE	-445150001-	1
S22	-CONTACT BLOCK TYPE ZB2-BZ105 TELEMECANIQUE	-445150010-	1
S22	-KNOB TYPE ZB2-BD3 DIAM.22 TELEMECANIQUE	-445170008-	1
S23/H23	-PALM OPERATED PUSHBUTTON TYPE EPDS 24V ELFIN	-445070100-	1
S23/H23	-OPERATOR TYPE TLG ELFIN	-445070400-	1
S3	-SELECTOR SWITCH TYPE XB2-BG21 DIAM.22 TELEMECANIQUE	-445170000-	1
S3Q	-LIMIT SWITCH TYPE BD10 SQUARE D	-447032210-	1
S3Q	-ADJUSTABLE-LENGTH ROD WITH CLAMP TYPE FA1 254MM	-447600003-	1
	-SQUARE D	- -	
S4A	-PUSHBUTTON TYPE XB2-BL42 DIAM.22 TELEMECANIQUE	-445160001-	1
S5E	-PUSHBUTTON TYPE XB2-BA21 DIAM.22 TELEMECANIQUE	-445160000-	1
S8E	-PUSHBUTTON TYPE XB2-BA21 DIAM.22 TELEMECANIQUE	-445160000-	1
S9	-SELECTOR SWITCH TYPE XB2-BG21 DIAM.22 TELEMECANIQUE	-445170000-	1
T1N	-CURRENT TRANSFORMER TYPE 940 150/5 SIPIE	-451400640-	1
T2N	-CURRENT TRANSFORMER TYPE TAS20B 50/5 IME	-451400600-	1
T3N-T4N	-CURRENT TRANSFORMER TYPE TAS20B 50/5 IME	-451400600-	2
T5	-TRANSFORMER TYPE 500VA 220-440V/24-110-120V VARAT	-434250700-	1
V	-DIODE TYPE 1N4007 ITT	-464001070-	3
V1	-VARISTOR TYPE 420V-90J G.E.	-464281120-	1
V2	-VARISTOR TYPE 250V-90J G.E.	-464281130-	1
X11-X12	-CONNECTOR TYPE 124.800 CAMOZZI	-432100000-	2
X13-X14	-CONNECTOR TYPE 124.800 CAMOZZI	-432100000-	2
X19	-CONNECTOR TYPE 20 PIN FEMALE (SOLDER TERMINAL) AMPHENOL	-482577200-	1
X19/X20	-FLAT CABLE TYPE CS 20GR 20POLES/STEP 1,27MM	-480670000-	1
	-3MT C.M.	- -	

C.M. S.P.A. SPARE PARTS MODENA IL 25.01.90

PRODOTTO: 090015095 M1500 380 220 50 SPEC. IN/IN NR.INT. 21192

MARKING-	DENOMINATION	-CODE	CM-QTA
X20	-CONNECTOR TYPE 20 PIN MALE (SOLDER TERMINAL)	-482567200-	2
X20	-CONNECTOR TYPE 20 PIN FEMALE (SOLDER TERMINAL) AMPHENOL	-482577200-	1
X4-X5	-CONNECTOR TYPE 124.800 CAMOZZI	-432100000-	2
X6-X7	-CONNECTOR TYPE 124.800 CAMOZZI	-432100000-	2
X8	-CONNECTOR TYPE 124.800 CAMOZZI	-432100000-	1
X9-X10	-CONNECTOR TYPE 124.800 CAMOZZI	-432100000-	2
Y1	-SINGLE BASE TYPE 8985041104 ISO1 FRAME A WESTINGHOUSE	-432200008-	1
Y1	-ELECTROVALVE TYPE 5746015280 ISO1 5/2 1SOL.220V/50HZ	-432532160-	1
	-WESTINGHOUSE	-	-
Y10-Y11	-ELECTROVALVE TYPE SCE353-44 1" 220V-50HZ 2WAYS ASCO	-432616061-	2
Y2-Y3	-INTERMEDIATE BASE TYPE 8985041122 ISO1 FRAME C	-432200005-	1
	-WESTINGHOUSE	-	-
Y2-Y3	-TERMINAL TYPE 8985041132 ISO1 WESTINGHOUSE	-432200006-	1
Y2-Y3	-ELECTROVALVE TYPE 5746025280 ISO1 5/2 2SOL.220V/50HZ	-432532260-	1
	-WESTINGHOUSE	-	-
Y4-Y5	-INTERMEDIATE BASE TYPE 8985041122 ISO1 FRAME C	-432200005-	1
	-WESTINGHOUSE	-	-
Y4-Y5	-TERMINAL TYPE 8985041132 ISO1 WESTINGHOUSE	-432200006-	1
Y4-Y5	-ELECTROVALVE TYPE 5746025280 ISO1 5/2 2SOL.220V/50HZ	-432532260-	1
	-WESTINGHOUSE	-	-
Y6-Y7	-ELECTROVALVE TYPE SCE353-44 1" 220V-50HZ 2WAYS ASCO	-432616061-	2
Y8-Y9	-ELECTROVALVE TYPE SCE353-44 1" 220V-50HZ 2WAYS ASCO	-432616061-	2
Z1-Z2	-SUPPRESSOR TYPE LRC-S3-0,22 LUTZE	-466120000-	2
Z11	-SUPPRESSOR TYPE LRC-S3-0,22 LUTZE	-466120000-	1
Z12-Z13	-SUPPRESSOR TYPE LRC-V3A-N0,22 110/220V LUTZE	-466120001-	2
Z14-Z15	-SUPPRESSOR TYPE LRC-V3A-N0,22 110/220V LUTZE	-466120001-	2
Z16	-SUPPRESSOR TYPE LRC-V3A-N0,22 110/220V LUTZE	-466120001-	1
Z17-Z18	-SUPPRESSOR TYPE LRC-V3A-N0,22 110/220V LUTZE	-466120001-	2
Z19-Z20	-SUPPRESSOR TYPE LRC-V3A-N0,22 110/220V LUTZE	-466120001-	2
Z21-Z22	-SUPPRESSOR TYPE LRC-V3A-N0,22 110/220V LUTZE	-466120001-	2
Z3-Z4	-SUPPRESSOR TYPE LRC-S3-0,22 LUTZE	-466120000-	2
Z5-Z6	-SUPPRESSOR TYPE LRC-S3-0,22 LUTZE	-466120000-	2
Z7-Z8	-SUPPRESSOR TYPE LRC-S3-0,22 LUTZE	-466120000-	2
Z9-Z10	-SUPPRESSOR TYPE LRC-S3-0,22 LUTZE	-466120000-	2

10. WIRING DIAGRAM (power supply circuit)

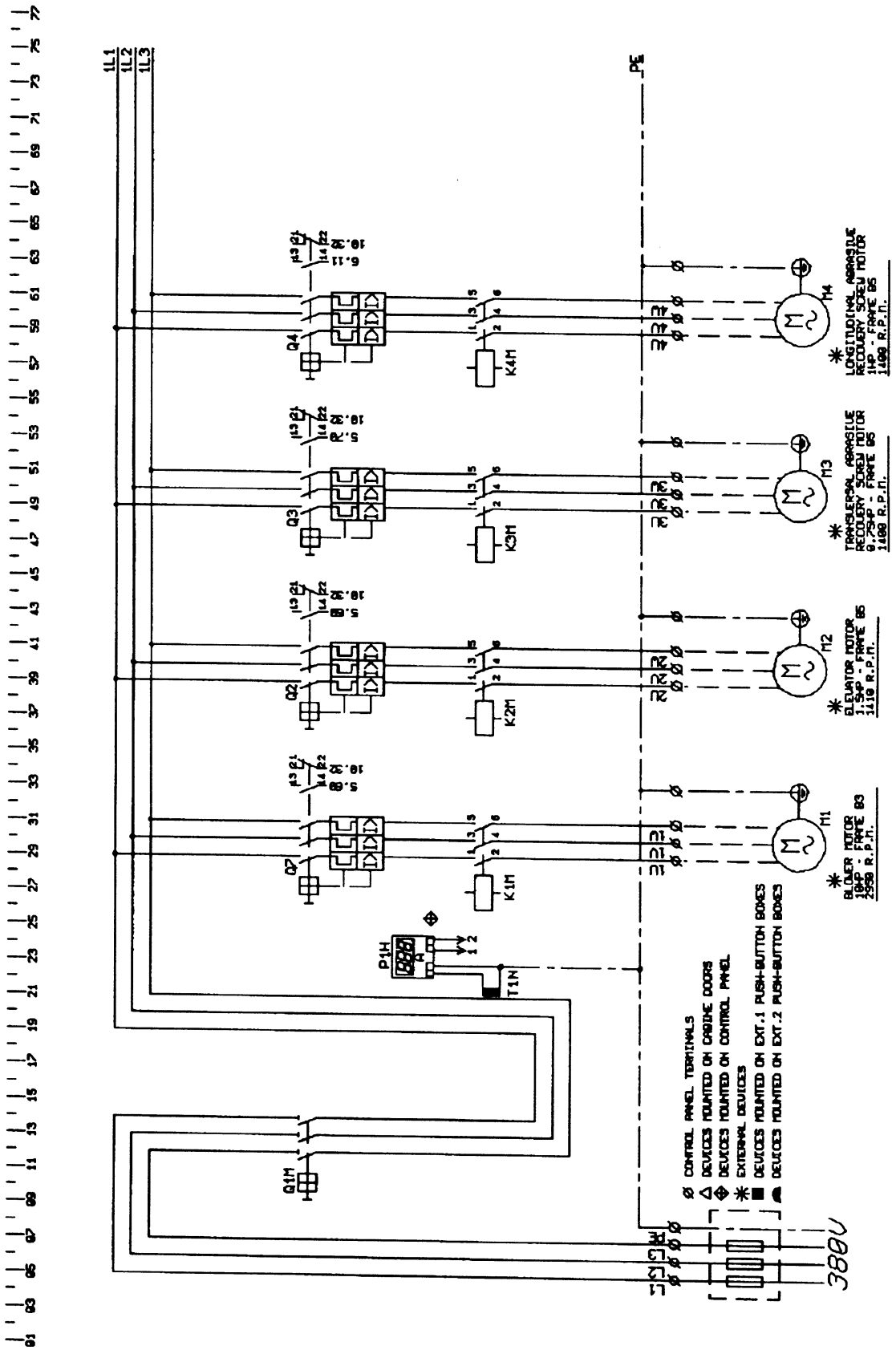

Power supply circuit

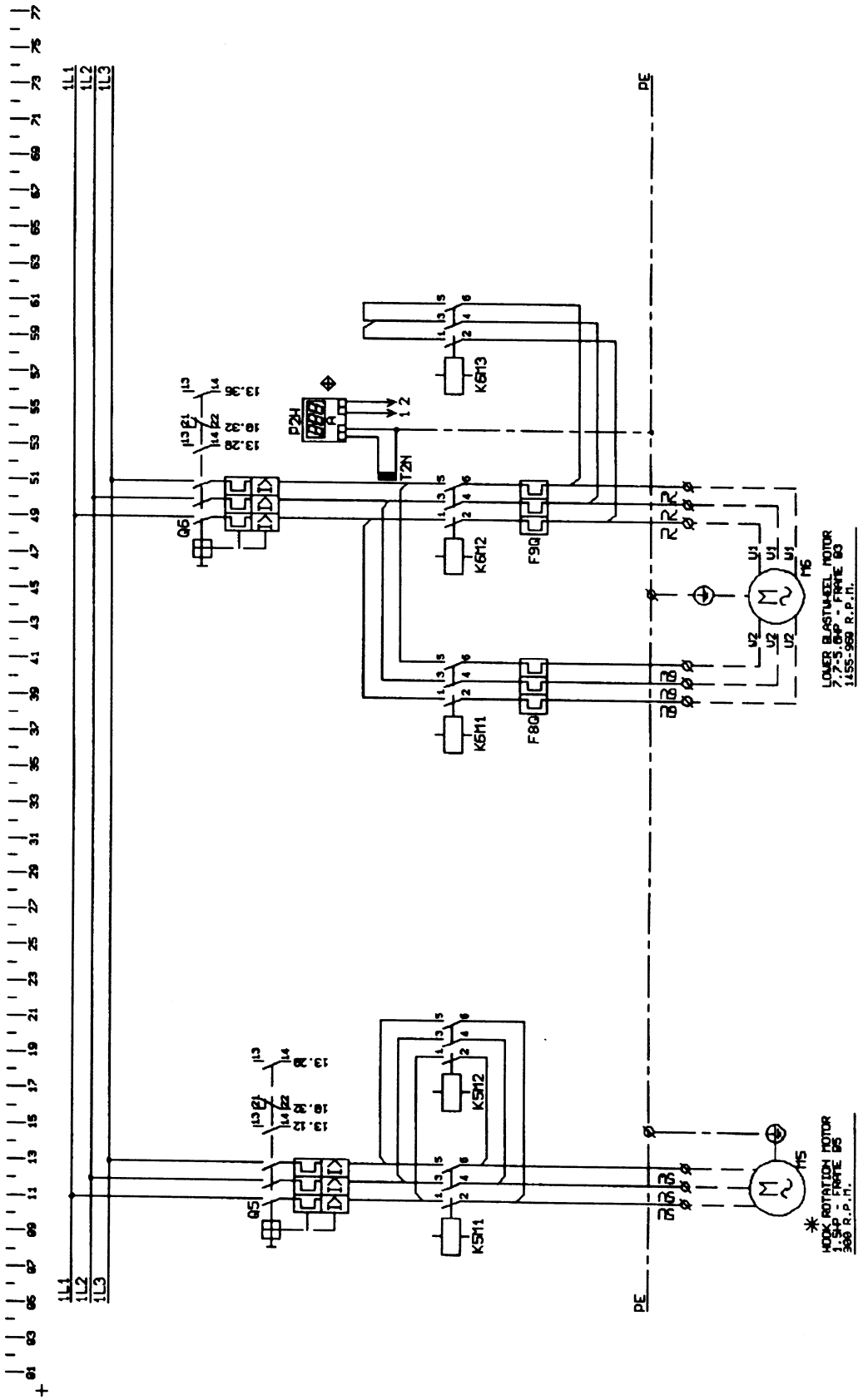

Power supply circuit

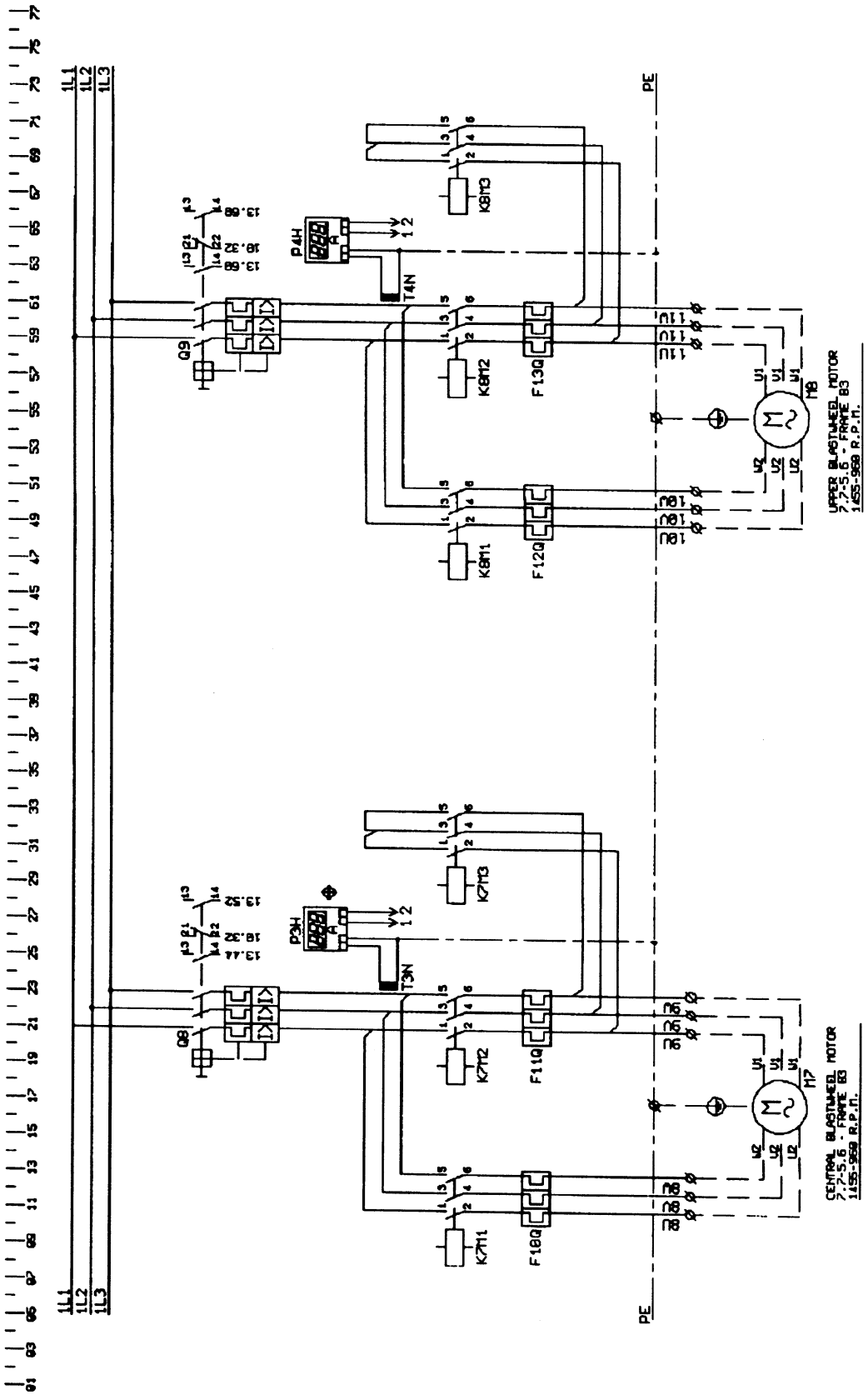

Control circuit

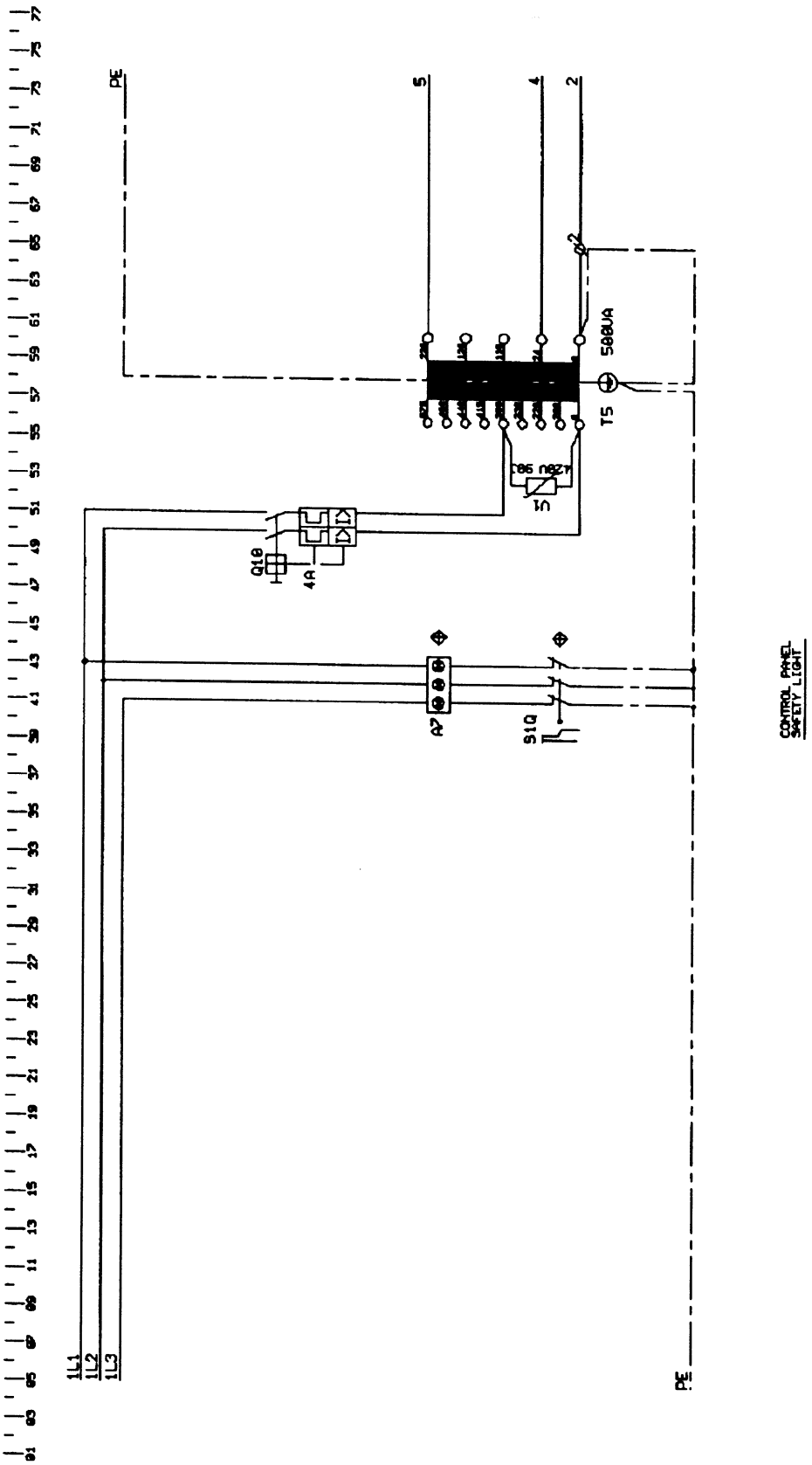

Control circuit

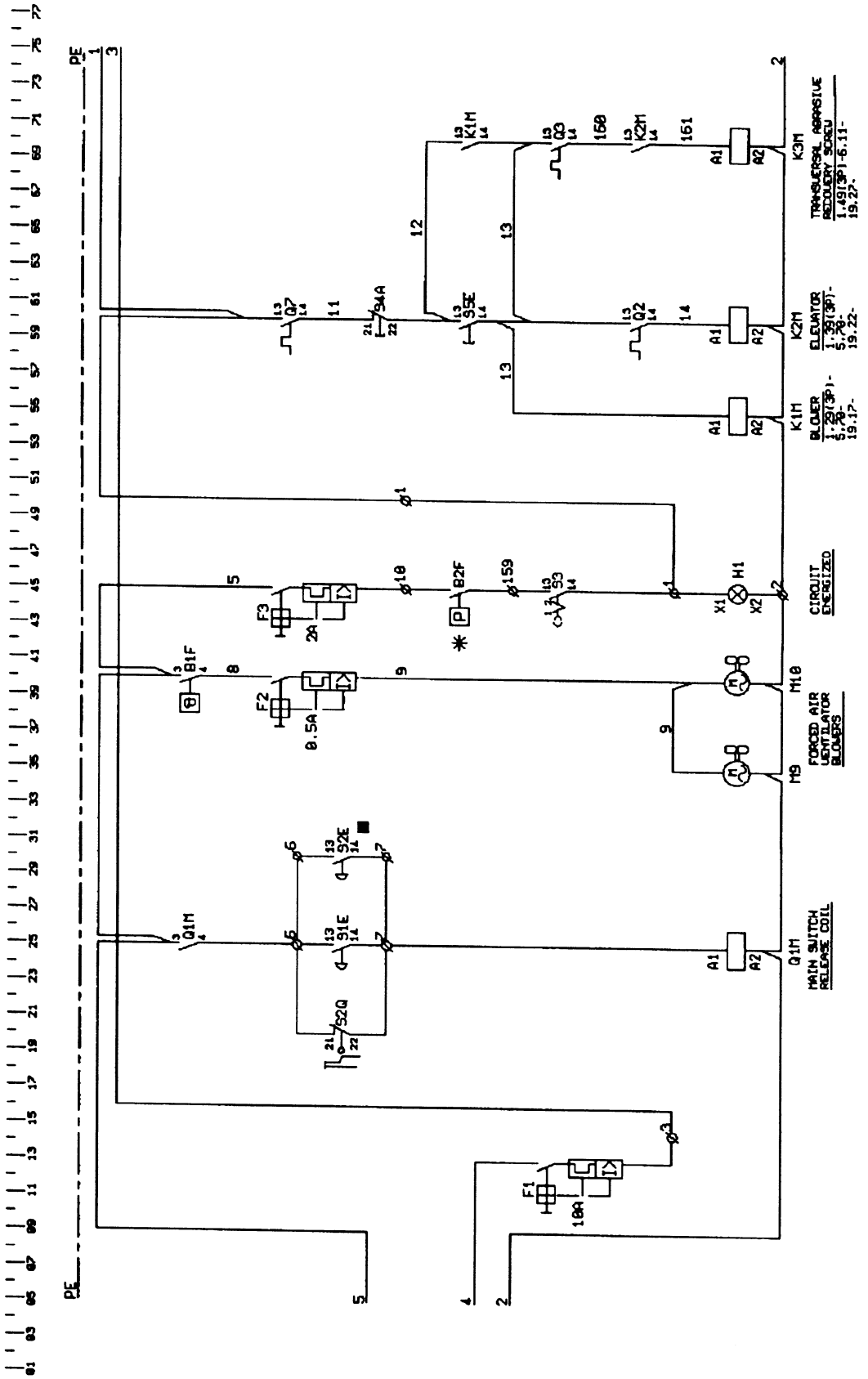

Control circuit

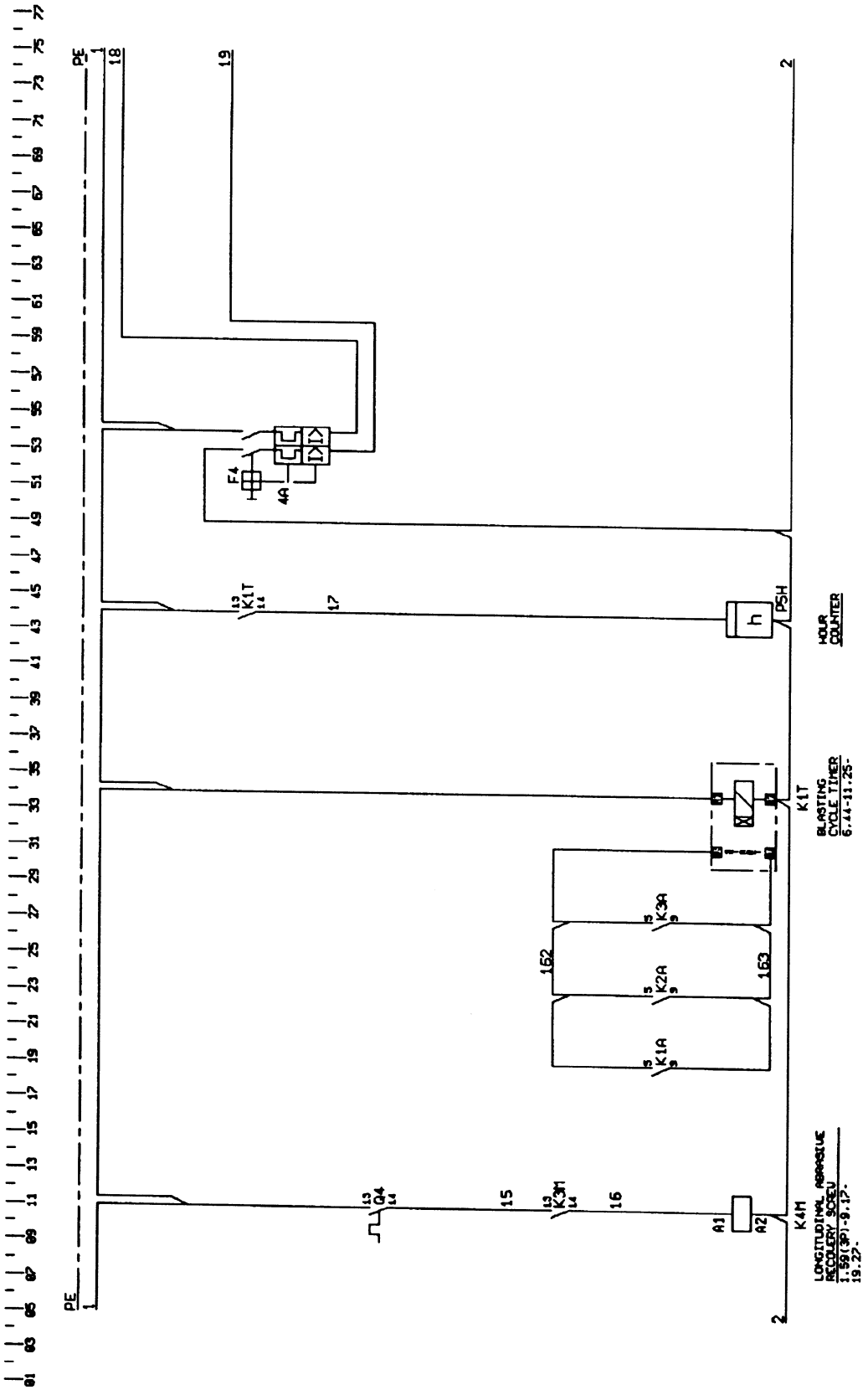

Programmable controller

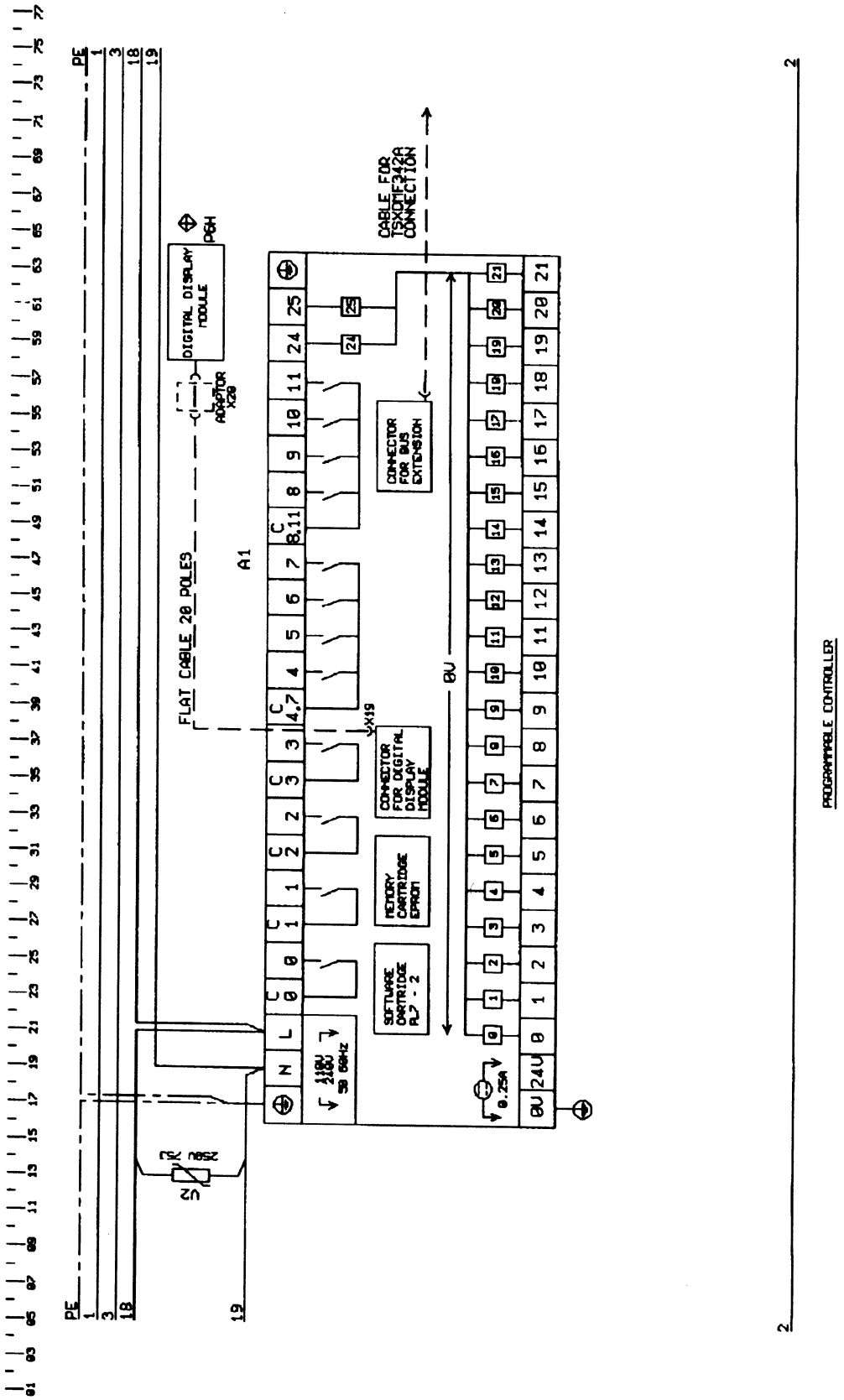

Programmable controller

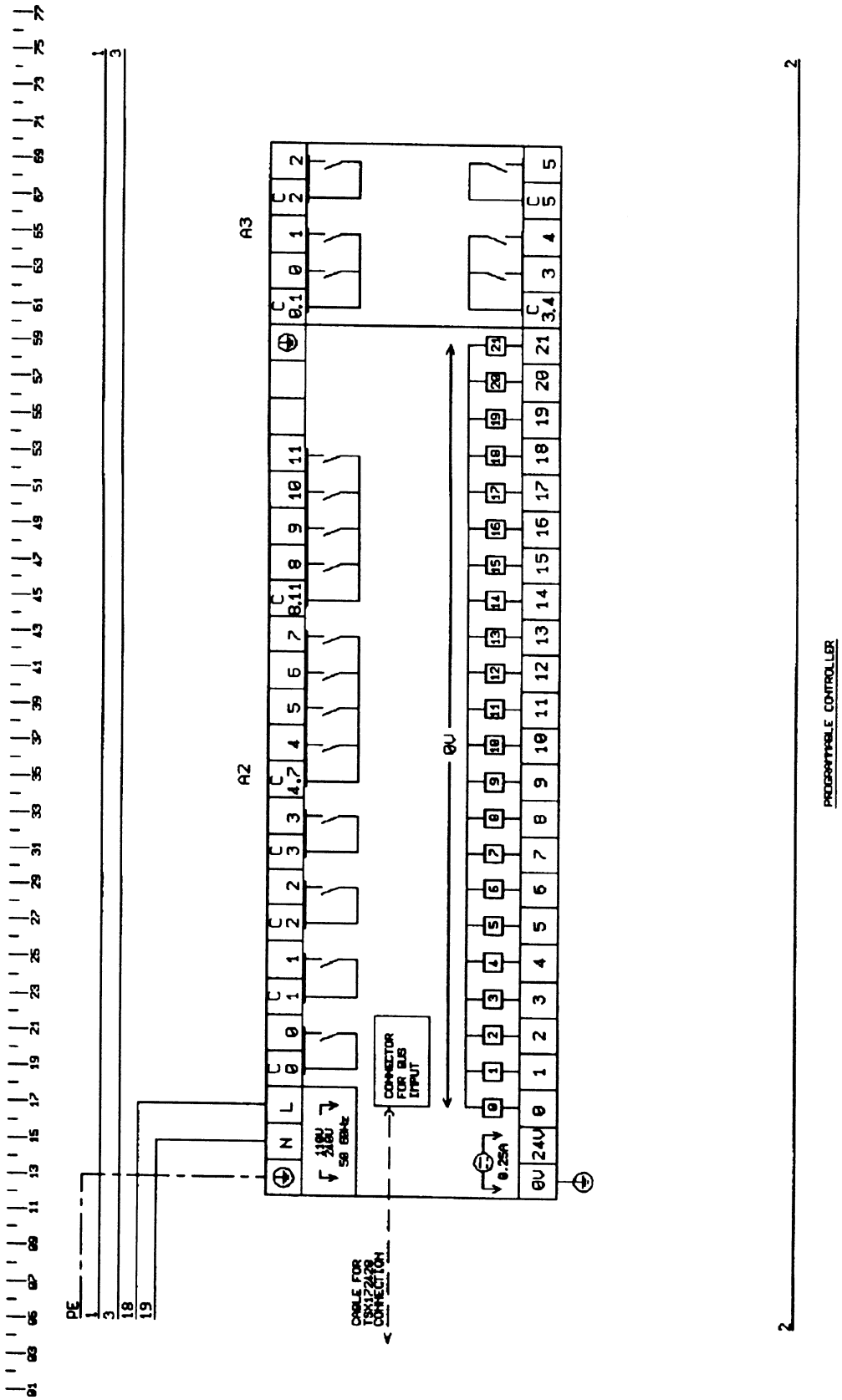

Programmable logic input circuits

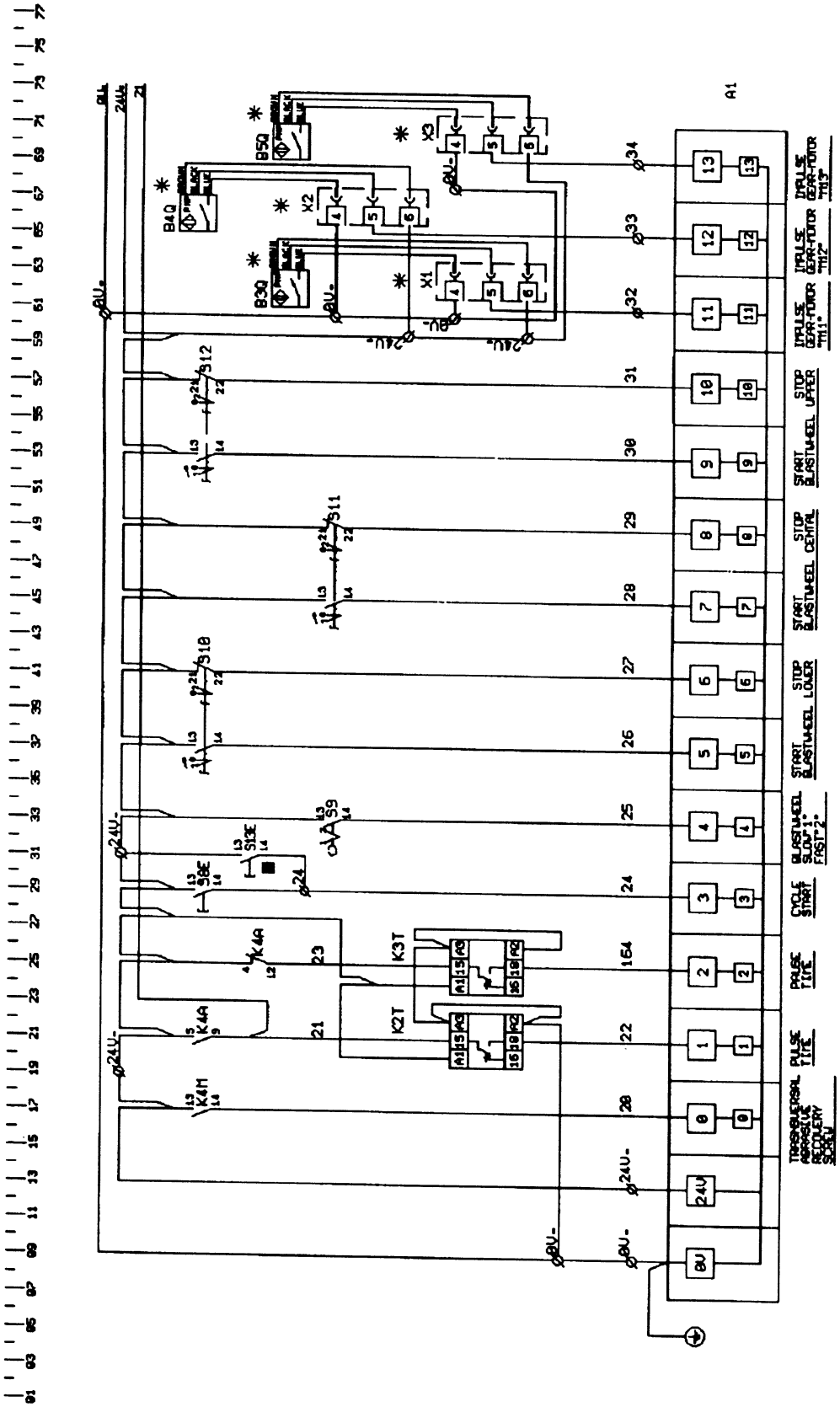

Programmable logic input circuits

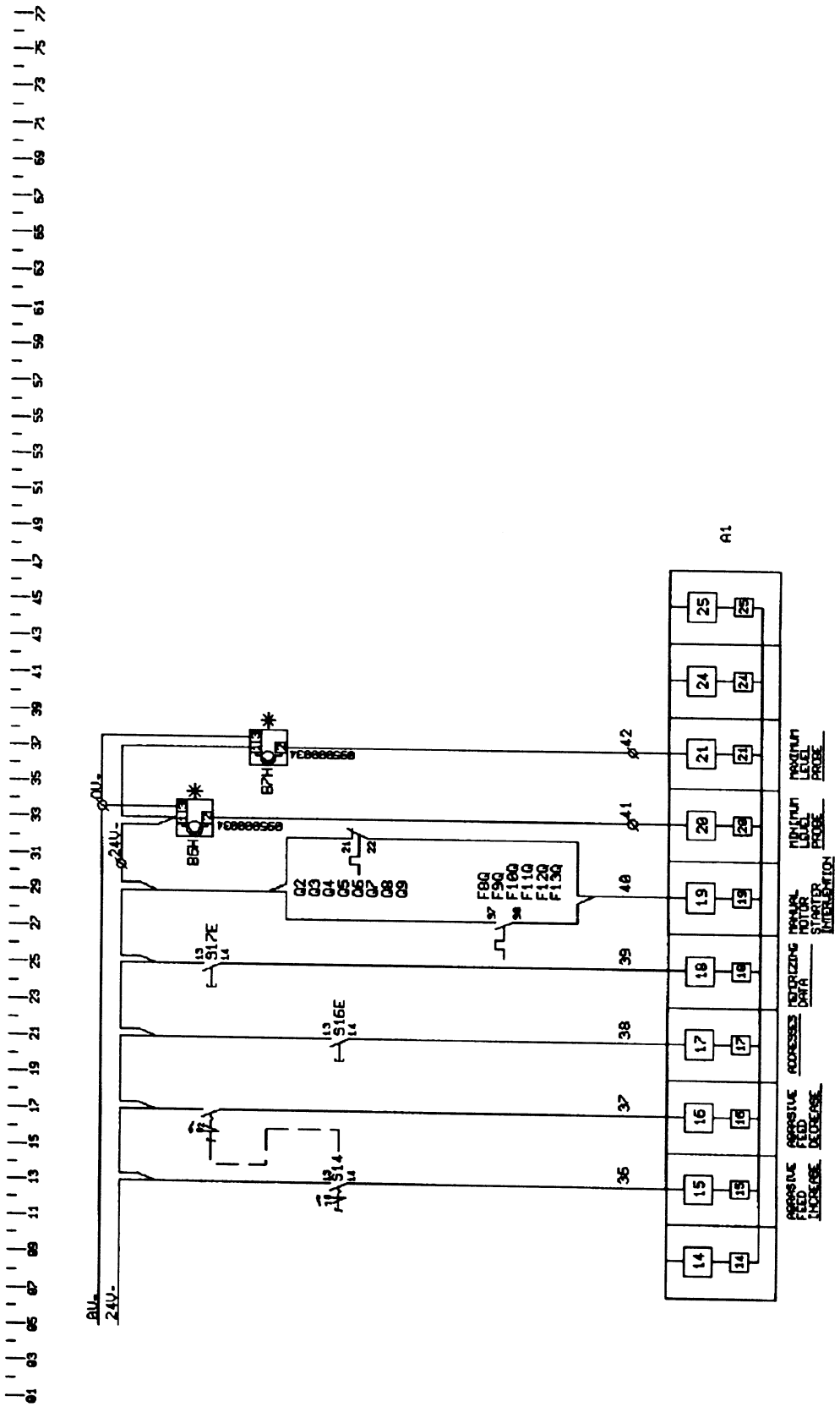

Programmable logic input circuits

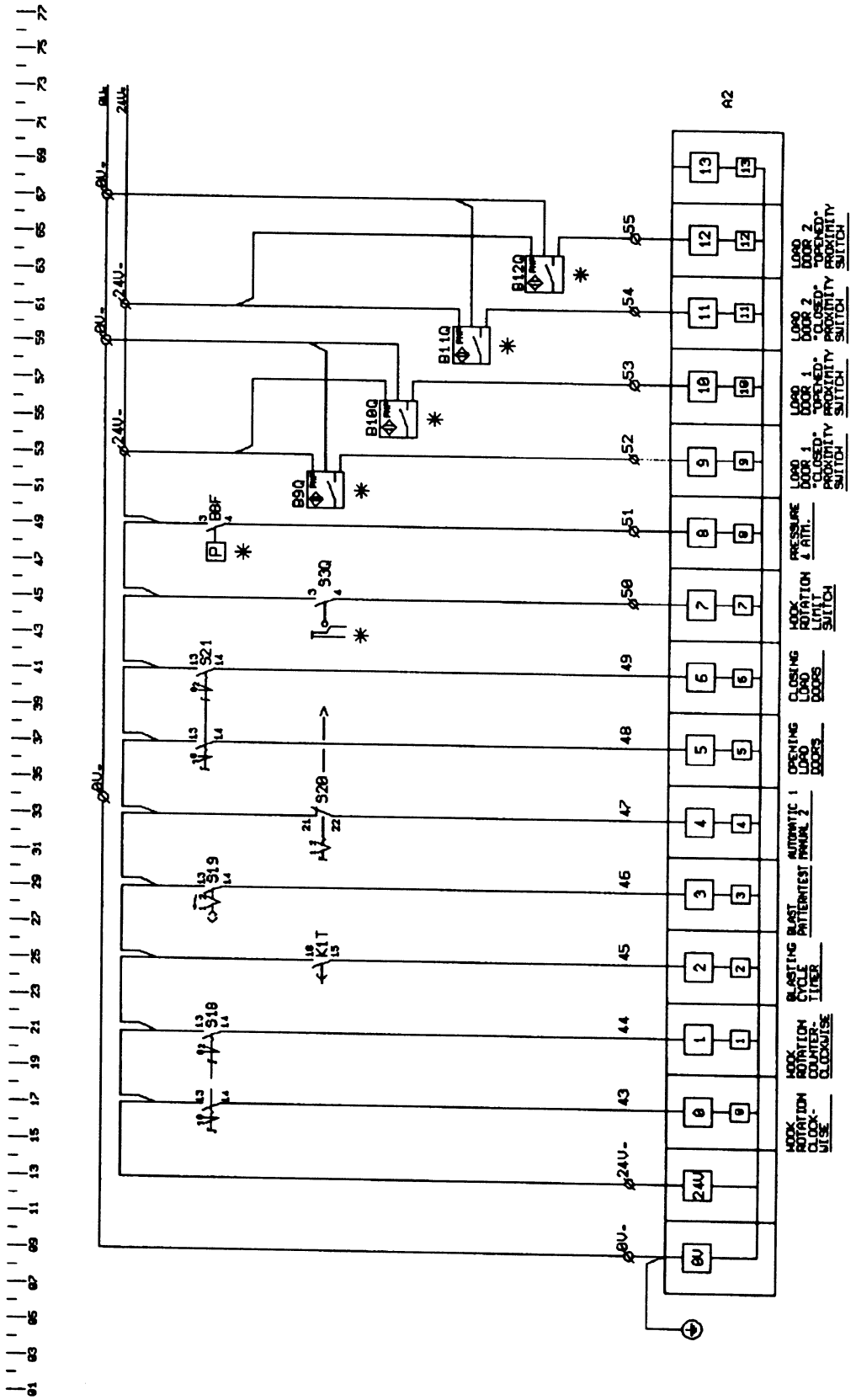

Programmable logic input circuits

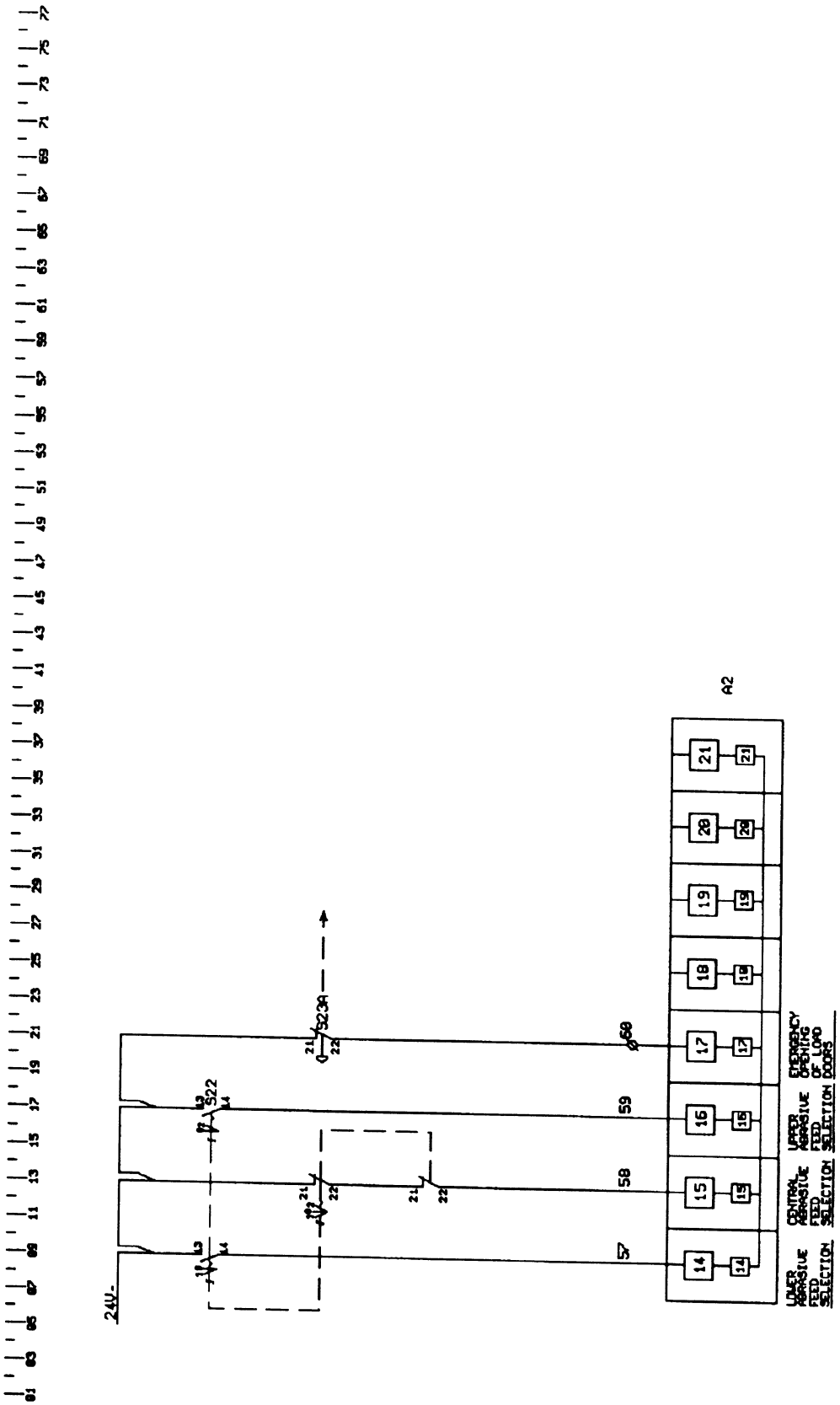

Programmable logic output circuits

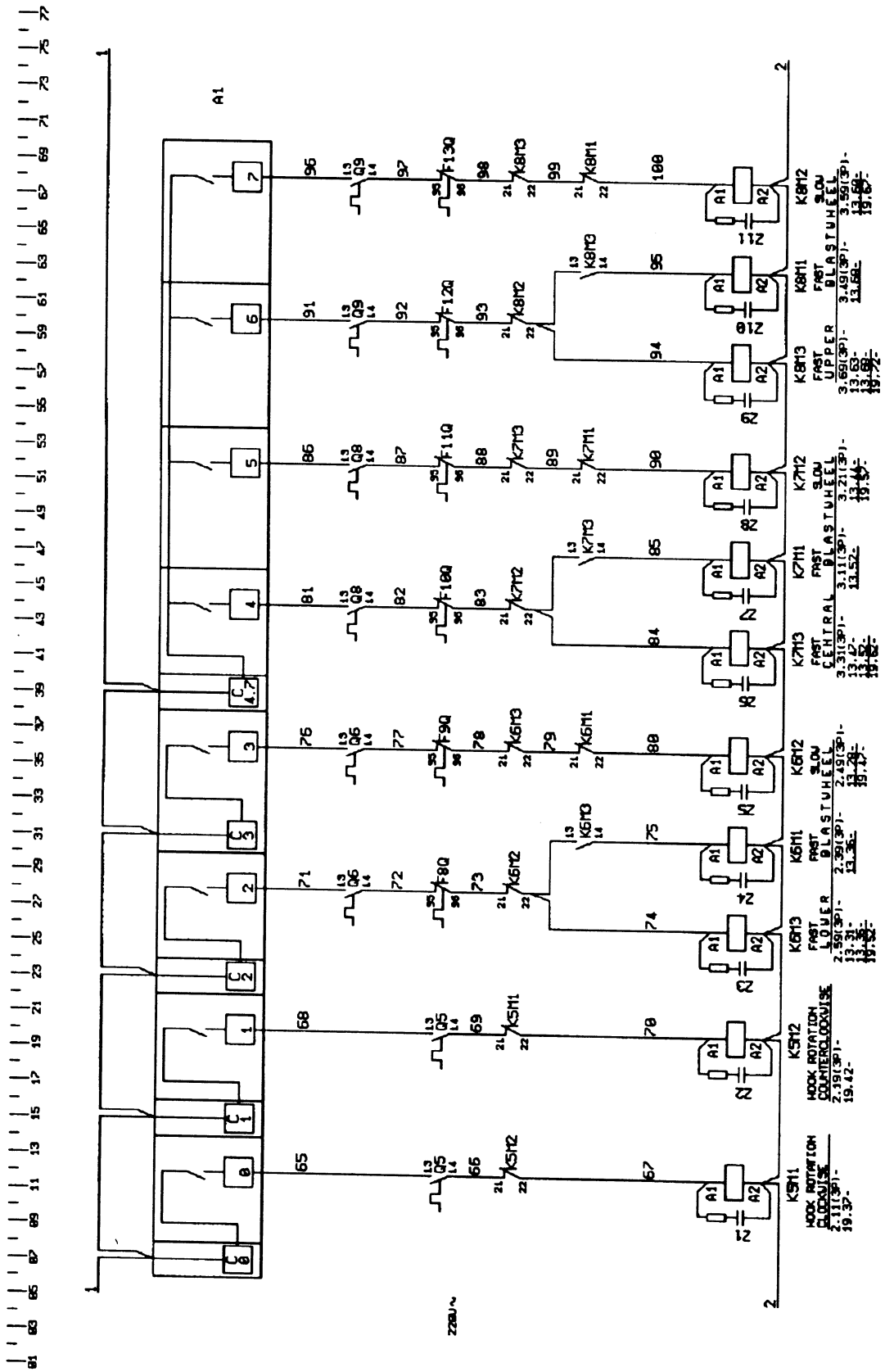

Programmable logic output circuits

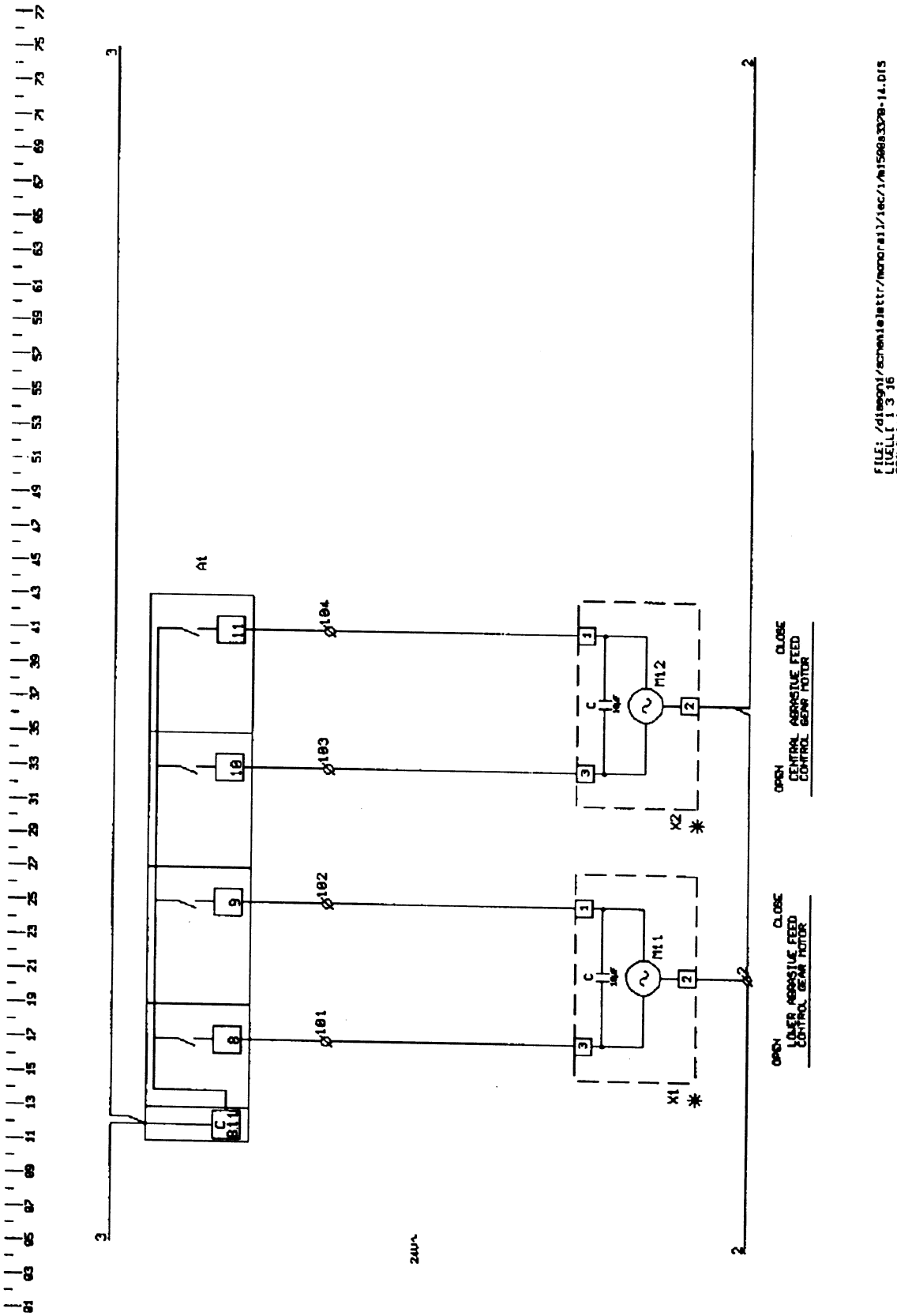

Programmable logic output circuits

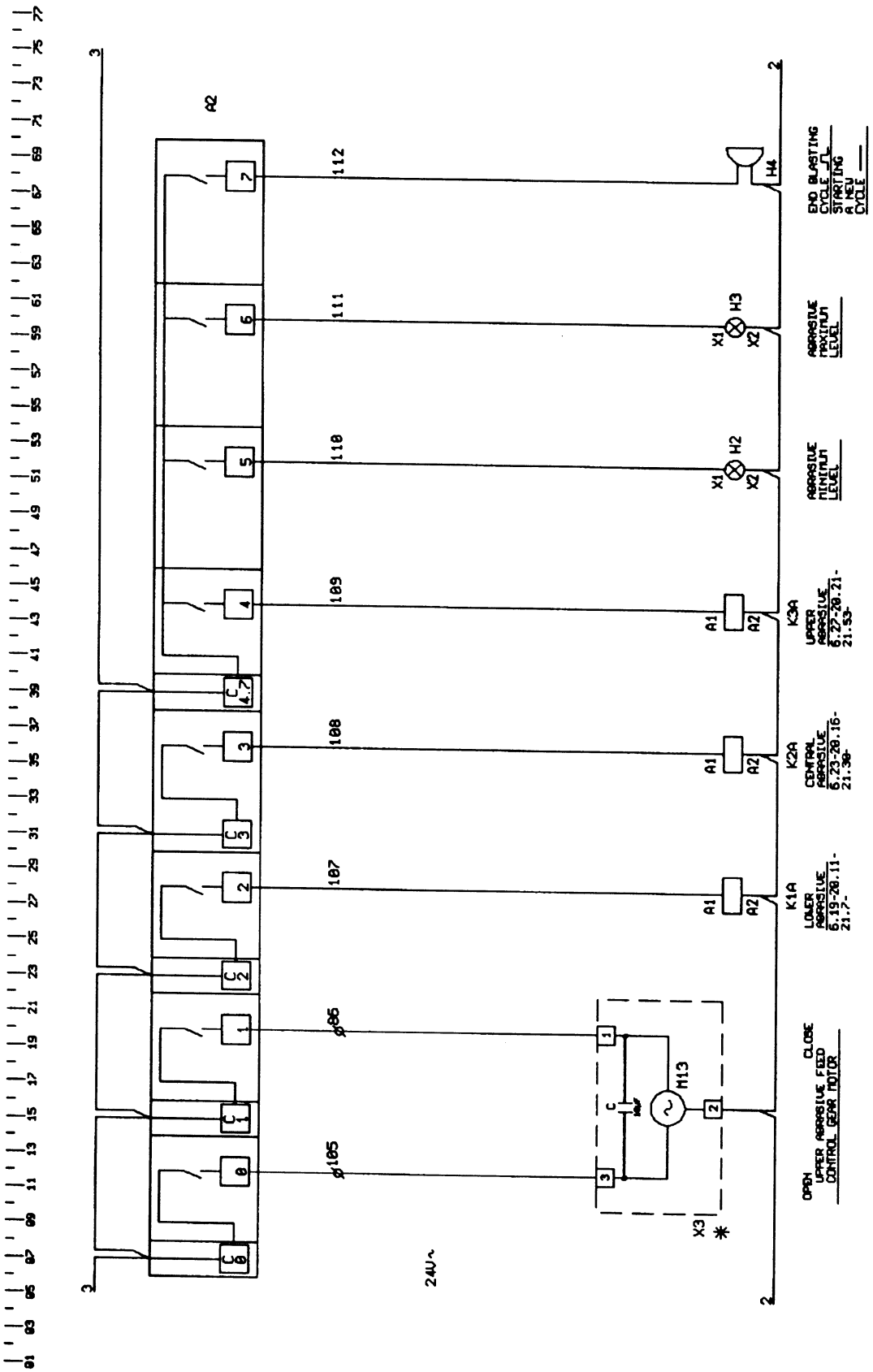

Programmable logic output circuits

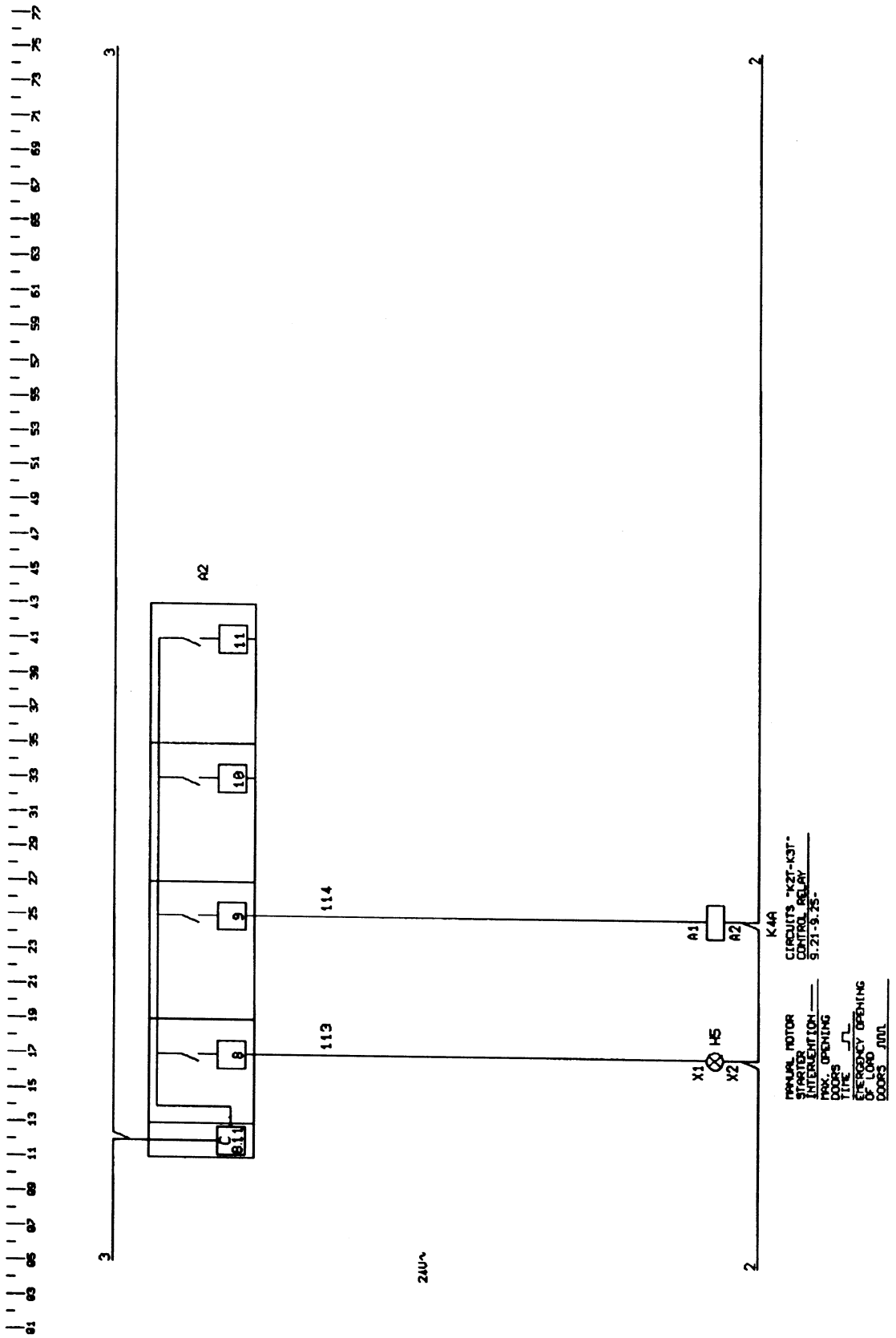

Electrovalves control circuit

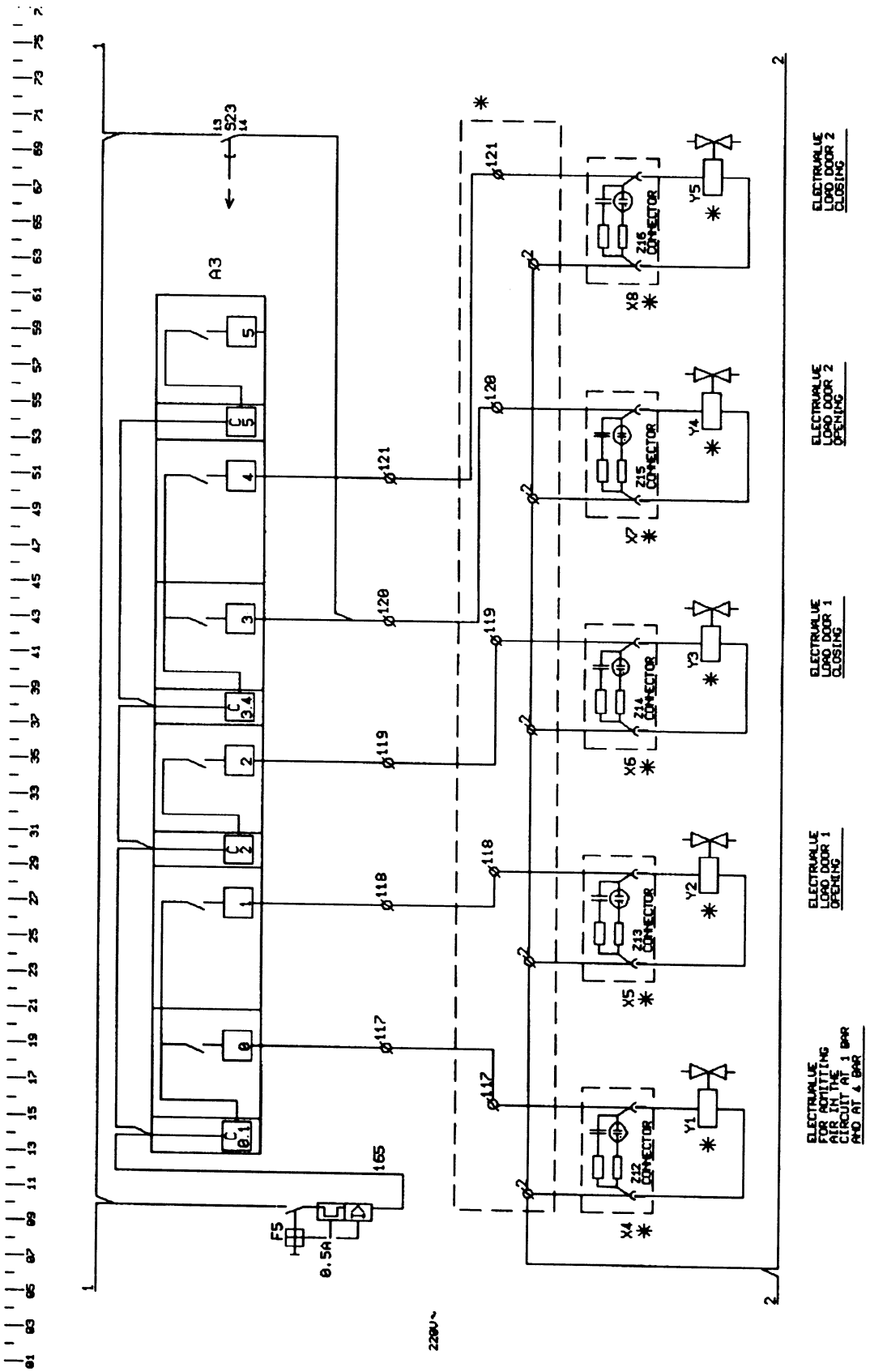

Impulse filter control circuit

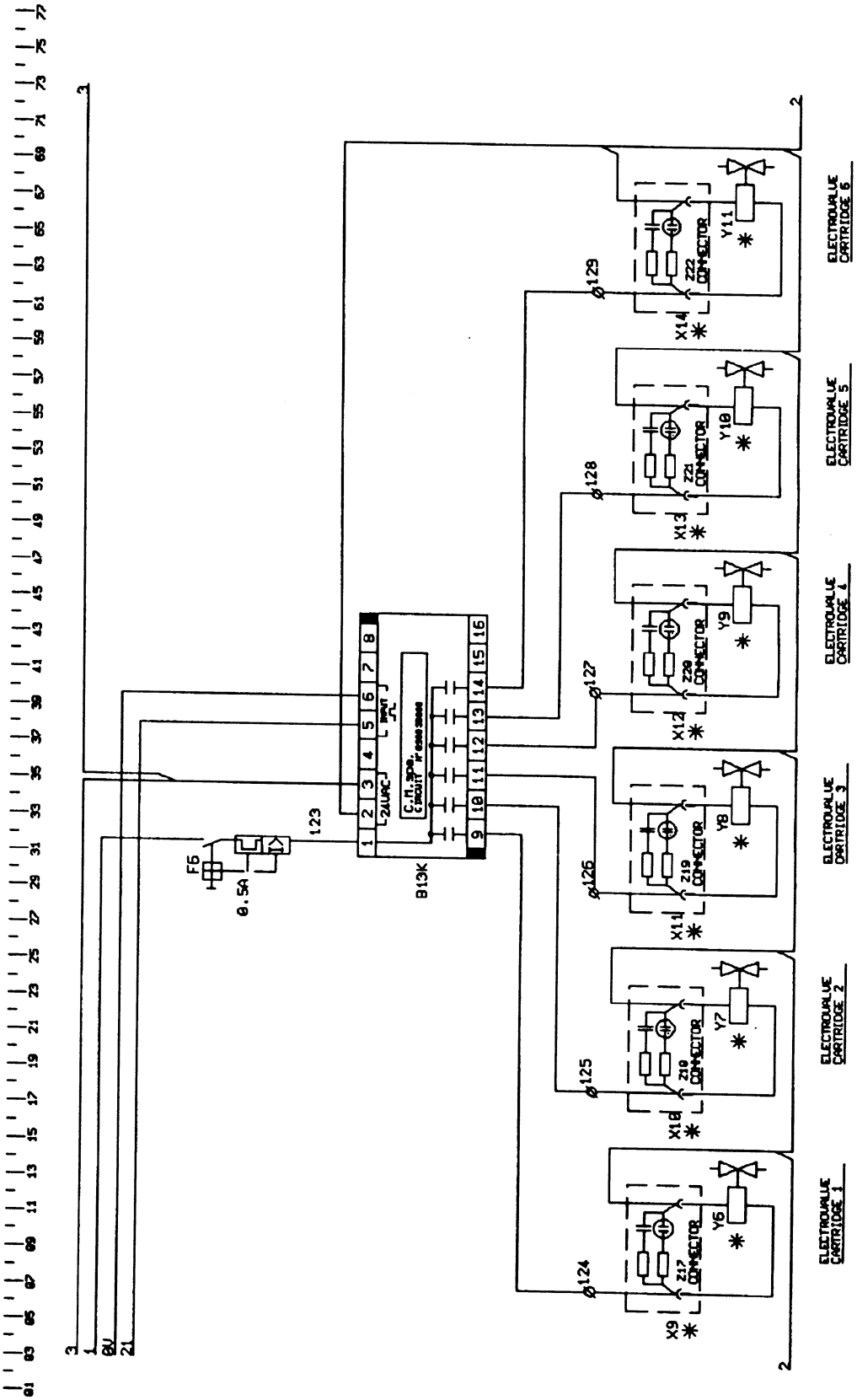

Signalling circuits

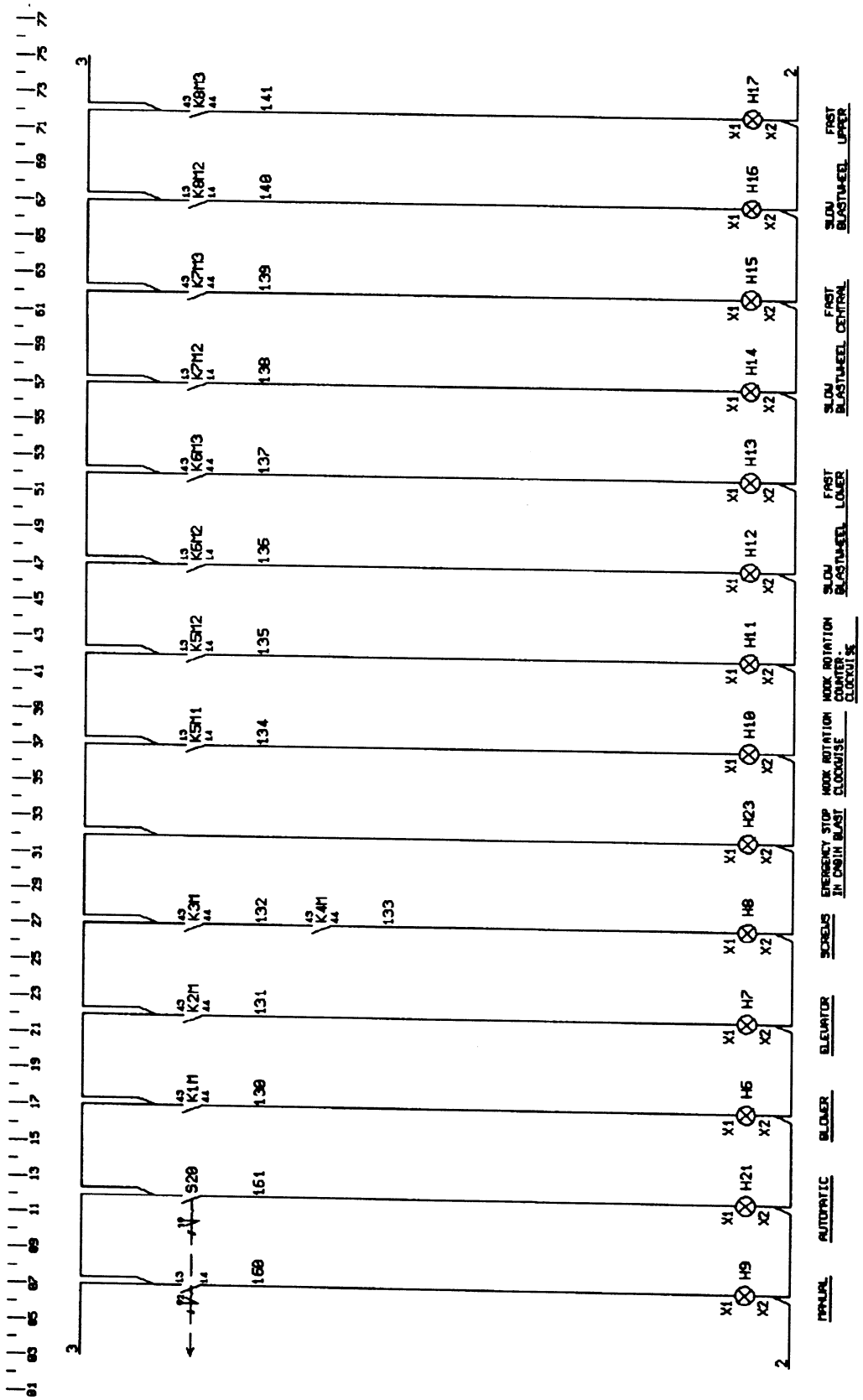

Signalling circuits

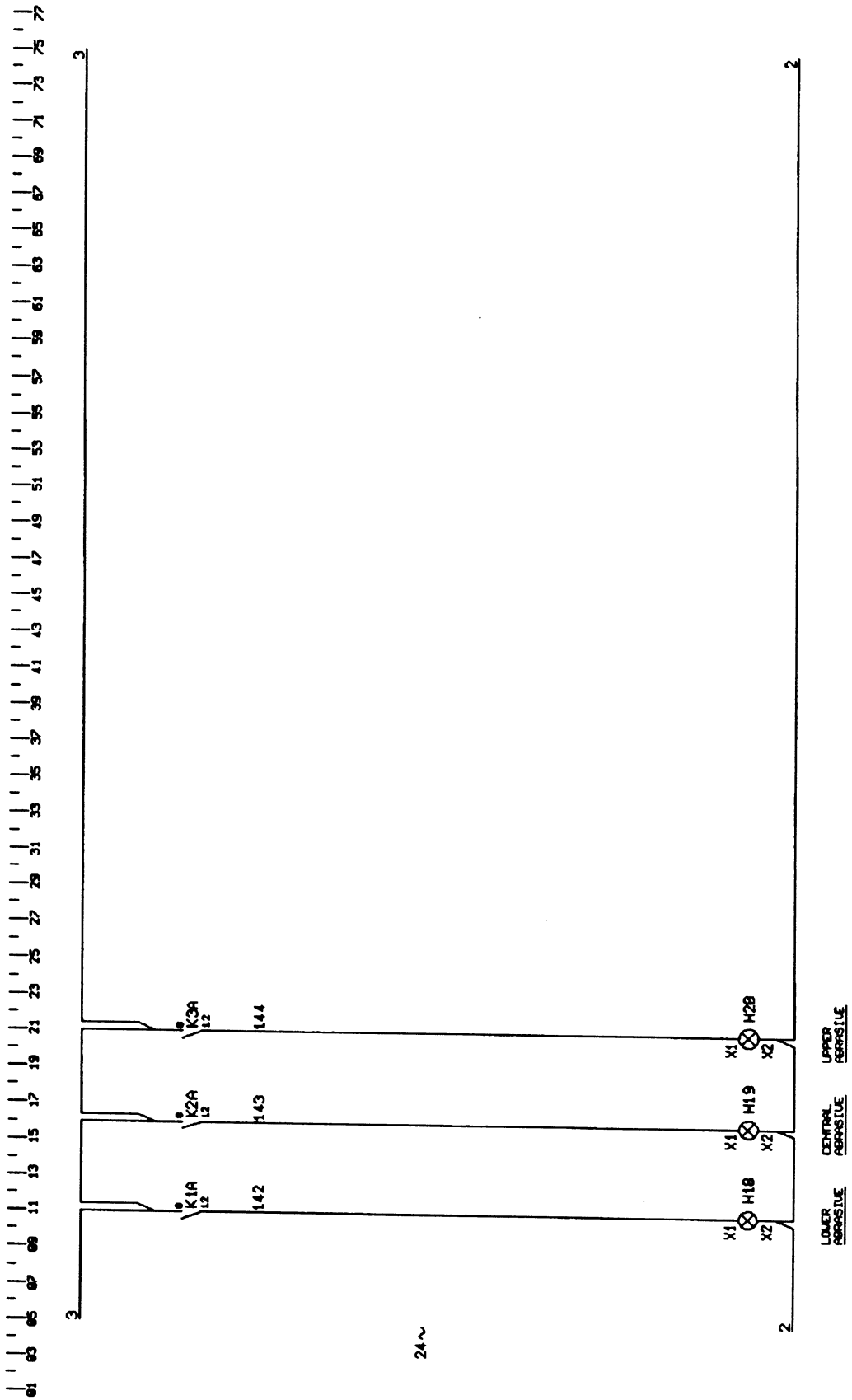

Media feed opening electromagnet control circuit

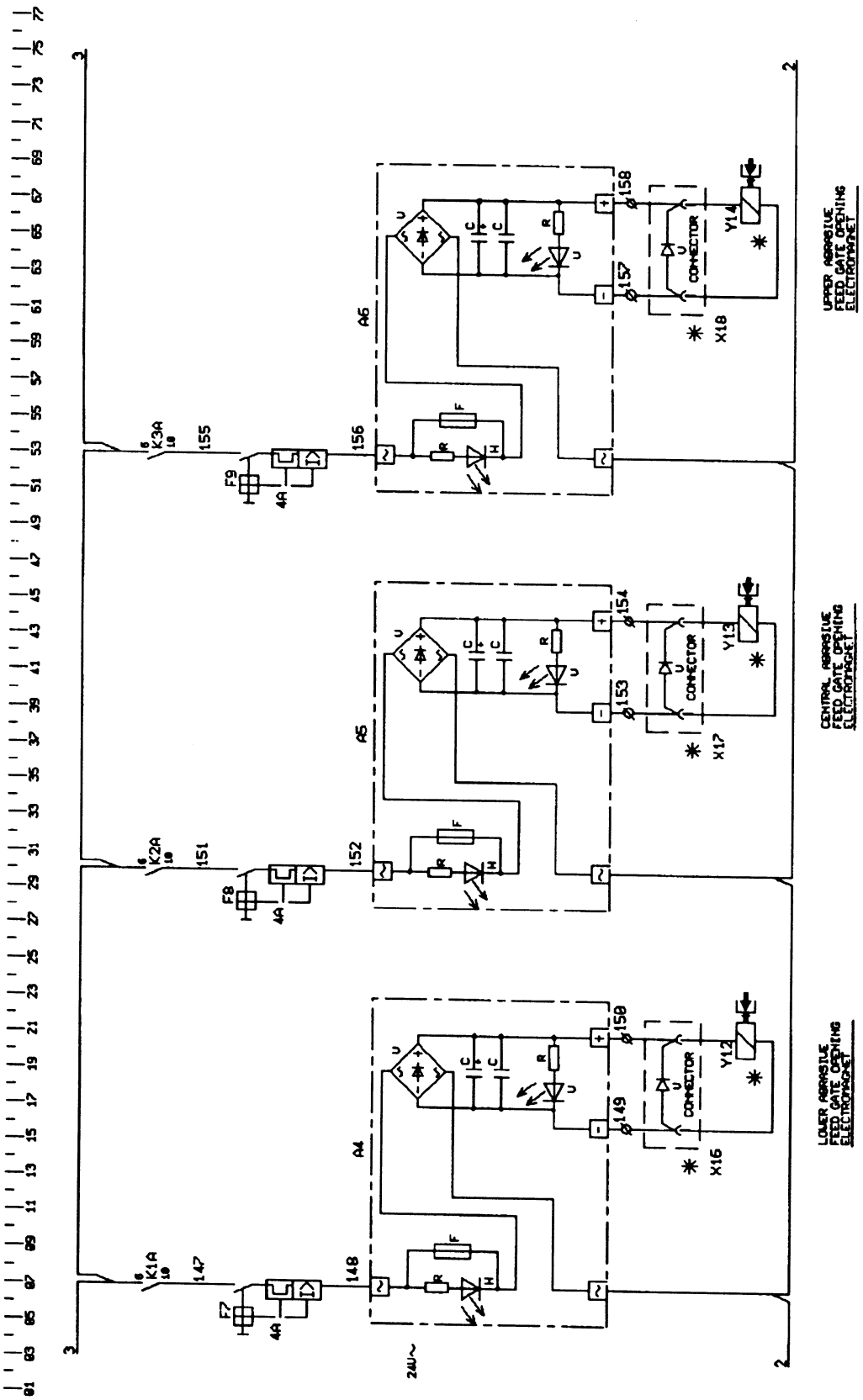

ELECTRIC CIRCUIT - LEGEND

A1 - PROGRAMMABLE CONTROLLER

A2 - EXTENSION MODULE

A3 - EXTENSION MODULE

A4-A5-A6 - FULL-WAVE RECTIFIER

A7/S1Q - THREE PHASE FLASHING SAFETY UNIT

B1F - THERMOSTAT

B2F - PRESSURE SWITCH (ENERGIZE CIRCUIT)

B3Q - PROXIMITY SWITCH PULSE GENERATOR (GEAR-MOTOR **(M11)**)

B4Q - PROXIMITY SWITCH PULSE GENERATOR (GEAR-MOTOR **(M12)**)

B5Q - PROXIMITY SWITCH PULSE GENERATOR (GEAR-MOTOR **(M13)**)

B6H - MINIMUM LEVEL PROBE

B7H - MAXIMUM LEVEL PROBE

B8F - PRESSURE SWITCH (PRESSURE A 4 BAR)

B9Q - PROXIMITY SWITCH (LOAD DOOR 1 "CLOSED")

B10Q - PROXIMITY SWITCH (LOAD DOOR 1 "OPEN")

B11Q - PROXIMITY SWITCH (LOAD DOOR 2 "CLOSED")

B12Q - PROXIMITY SWITCH (LOAD DOOR 2 "OPEN")

B13K - PROGRAMMABLE SEQUENCER

B14F-B15F - VACUUM GAUGE

F1-F2-F3 - MINIATURE CIRCUIT- BREAKER (SINGLE-POLE)

F4-F9 - MINIATURE CIRCUIT-BREAKER (DOUBLE-POLE)

F5-F6-F7-F8 - MINIATURE CIRCUIT-BREAKER (SINGLE-POLE)

F8Q-F9Q-F10Q-F11Q-F12Q-F13Q - THERMAL OVERLOAD RELAYS

H1-H2-H3-H5-H6-H7-H8-H9 - SIGNALLING LIGHTS

H4 - ELECTRONIC AUDIBLE AND VISUAL WARNING SIGNAL

H10-H11-H12-H13-H14-H15 - SIGNALLING LIGHTS

H17-H18-H19-H20-H21 - SIGNALLING LIGHTS

K1A - ELECTROMAGNET **(Y12)** CONTROL RELAY

K2A - ELECTROMAGNET **(Y13)** CONTROL RELAY

K3A - ELECTROMAGNET **(Y14)** CONTROL RELAY

K4A - PAUSE AND PULSE TIME CONTROL RELAY

K1M - BLOWER MOTOR STARTER

K2M - ELEVATOR MOTOR STARTER

K3M - TRASVERSAL ABRASIVE RECOVERY SCREW MOTOR STARTER

K4M - LONGITUDINAL ABRASIVE RECOVERY SCREW MOTOR STARTER

K5M1 - HOOK ROTATION "CLOCKWISE" MOTOR STARTER

K5M2 - HOOK ROTATION "COUNTERCLOCKWISE" MOTOR STARTER

K6M1-K6M3 - LOWER BLASTWHEEL MOTOR STARTER (FAST)

K6M2 - LOWER BLASTWHEEL MOTOR STARTER (SLOW)

K7M1-K7M3 - CENTRAL BLASTWHEEL MOTOR STARTER (FAST)

K7M2 - CENTRAL BLASTWHEEL MOTOR STARTER (SLOW)

K8M1-K8M3 - UPPER BLASTWHEEL MOTOR STARTER (FAST)

K8M2 - UPPER BLASTWHEEL MOTOR STARTER (SLOW)

K1T - BLASTING CYCLE TIMER

K2T - TIME DELAY RELAY (PULSE TIME)

K3T - TIME DELAY RELAY (PAUSE TIME)

M1-M2-M3-M4-M5-M6-M7-M8 - MOTORS

M9-M10 - AXIAL FANS (FORCED AIR VENTILATION BLOWER)

M11 - LOWER ABRASIVE FEED CONTROL GEAR-MOTOR

M12 - CENTRAL ABRASIVE FEED CONTROL GEAR-MOTOR

M13 - UPPER ABRASIVE CONTROL GEAR-MOTOR

P1H - AMMETER CIRCUIT AMPERAGE

P2H - LOWER BLASTWHEEL AMMETER

P3H - CENTRAL BLASTWHEEL AMMETER

P4H - UPPER BLASTWHEEL AMMETER

P5H - HOUR COUNTER

P6H - DIGITAL DISPLAY MODULE

Q1M - CIRCUIT-BREAKER

Q2-Q3-Q4-Q5-Q6-Q7-Q8-Q9 - MANUAL MOTOR STARTERS

Q10 - MINIATURE CIRCUIT-BREAKER (DOUBLE-POLE)

S1E-S2E - EMERGENCY STOP

S3 - SELECTOR SWITCH FOR ENERGIZE CIRCUIT

S4A - STOP PUSHBUTTON (BLOWER, ELEVATOR, TRASVERSAL ABRASIVE RECOVERY SCREW AND LONGITUDINAL ABRASIVE RECOVERY SCREW)

S5E - START PUSHBUTTON (BLOWER, ELEVATOR, TRASVERSAL ABRASIVE RECOVERY SCREW AND LONGITUDINAL ABRASIVE RECOVERY SCREW)

S8E - CYCLE START PUSHBUTTON

S9 - VELOCITY SELECTOR SWITCH (SLOW-FAST)

S10 - SELECTOR SWITCH FOR INSERTION OR ELIMINATION OF LOWER BLASTWHEEL

S11 - SELECTOR SWITCH FOR INSERCTION OR ELIMINATION OF CENTRAL BLASTWHEEL

S12 - SELECTOR SWITCH FOR INSERCTION OR ELIMINATION OF UPPER BLASTWHEEL

S13E - CYCLE START PUSHBUTTON (EXT)

S14 - SELECTOR SWITCH (INCREASE-DECREASE ABRASIVE FEED)

S16E - START PUSHBUTTON (ADDRESSES)

S17E - START PUSHBUTTON (MEMORIZING DATA)

S18 - SELECTOR SWITCH FOR SETTING THE HOOK ROTATION CLOCKWISE, COUNTERCLOCKWISE OR AUTOMATIC

S19 - SELECTOR SWITCH FOR ABRASIVE BLAST PATTERN TEST

S20 - MANUAL, AUTOMATIC MODE SELECTOR SWITCH

S21 - SELECTOR SWITCH FOR OPENING AND CLOSING LOAD DOORS

S22 - SELECTOR SWITCH (PRESET ABRASIVE FEED GATE)

S23/H23 - PALM OPERATED PUSHBUTTON "EMERGENCY OPENING OF LOAD DOORS" (IN BLASTING CABIN)

S2Q - MICROSWITCH INSERTION OF MAIN SWITCH RELEASE COIL

S3Q - HOOK ROTATION LIMIT SWITCH

T1N-T2N-T3N-T4N - CURRENT TRANSFORMERS

T5 - TRANSFORMER

V - DIODE

V1-V2 - VARISTORS

X1-X2-X3-X4-X5-X6-X7-X8 - CONNECTORS

X9-X10-X11-X12-X13-X14 - CONNECTORS

X16-X17-X18-X19-X20 - CONNECTORS

Y1 - ELECTROVALVE FOR ADMITTING AIR IN THE CIRCUIT AT 1 BAR AND 4 BAR

Y2 - LOAD DOOR 1 "OPENING" ELECTROVALVE

Y3 - LOAD DOOR 1 "CLOSING" ELECTROVALVE

Y4 - LOAD DOOR 2 "OPENING" ELECTROVALVE

Y5 - LOAD DOOR 2 "CLOSING" ELECTROVALVE

Y6 - ELECTROVALVE CARTRIDGE 1

Y7 - ELECTROVALVE CARTRIDGE 2

Y8 - ELECTROVALVE CARTRIDGE 3

Y9 - ELECTROVALVE CARTRIDGE 4

Y10 - ELECTROVALVE CARTRIDGE 5

Y11 - ELECTROVALVE CARTRIDGE 6

Y12 - LOWER ABRASIVE FEED GATE OPENING ELECTROMAGNET

Y13 - CENTRAL ABRASIVE FEED GATE OPENING ELECTROMAGNET

Y14 - UPPER ABRASIVE FEED GATE OPENING ELECTROMAGNET

Z1-Z2-Z3-Z4-Z5-Z6-Z7-Z8 - SUPPRESSORS

Z9-Z10-Z11-Z12-Z13-Z14-Z15 - SUPPRESSORS

Z16-Z17-Z18-Z19-Z20-Z21-Z22 - SUPPRESSORS

10.2. Pneumatic diagram

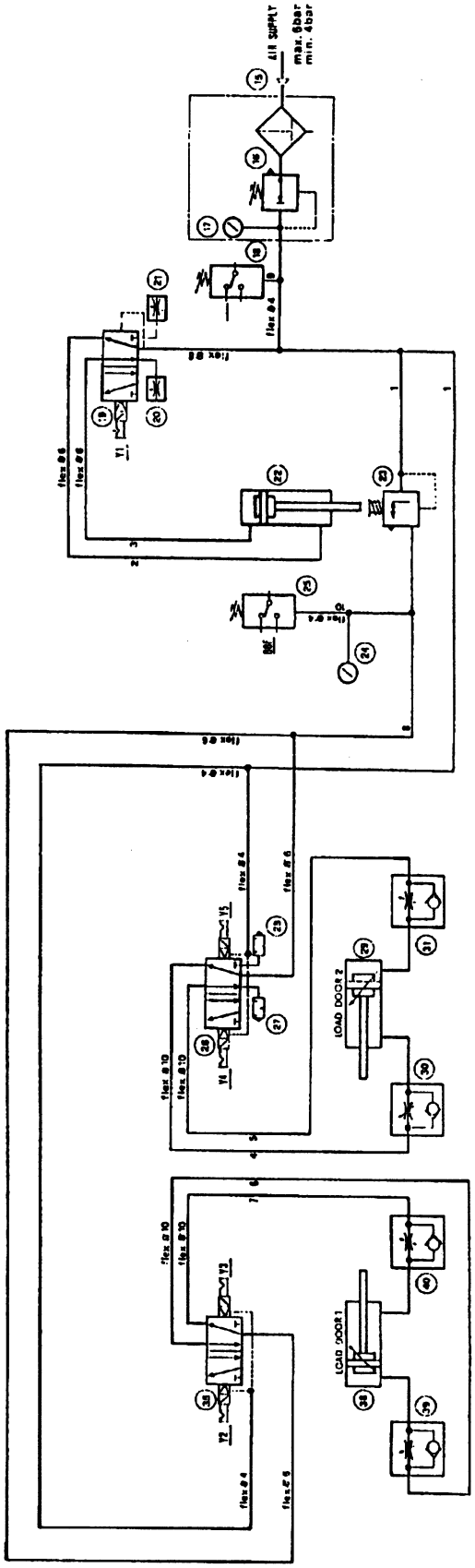

PNEUMATIC DIAGRAM - LEGEND

POS.15 - MANIFOLD PRESSURE

POS.16 - FILTER AND REGULATOR

POS.17 - PRESSURE GAUGE

POS.18 - PRESSURE SWITCH (SEE **(B2F)**)

POS.19 - ELECTROVALVE (SEE **(Y1)**)

POS.20 - FLOW CONTROL FOR BIDIRECTIONAL USE

POS.21 - FLOW CONTROL FOR BIDIRECTIONAL USE

POS.22 - DOUBLE-ACTING PNEUMATIC CYLINDER

POS.23 - CONTROL VALVE

POS.24 - PRESSURE GAUGE

POS.25 - PRESSURE SWITCH (SEE **(B8F)**)

POS.26 - ELECTROVALVE (SEE **(Y4)** AND **(Y5)**)

POS.27 - SILENCER

POS.28 - SILENCER

POS.29 - DOUBLE-ACTING PNEUMATIC CYLINDER WITH ADJUSTABLE POSITION SHOCK ABSORBERS (LOAD DOOR 1)

POS.30 - FLOW REGULATOR WITH CHECK VALVE

POS.31 - FLOW REGULATOR WITH CHECK VALVE

POS.35 - ELECTROVALVE (SEE **(Y2)** AND **(Y3)**)

POS.38 - DOUBLE-ACTING PNEUMATIC CYLINDER WITH ADJUSTABLE POSITION SHOCK ABSORBERS (LOAD DOOR 1)

POS.39 - FLOW REGULATOR WITH CHECK VALVE

POS.40 - FLOW REGULATOR WITH CHECK VALVE

10.2. Electronic diagrams

- PROGRAMMABLE SEQUENCER - cod.096035000

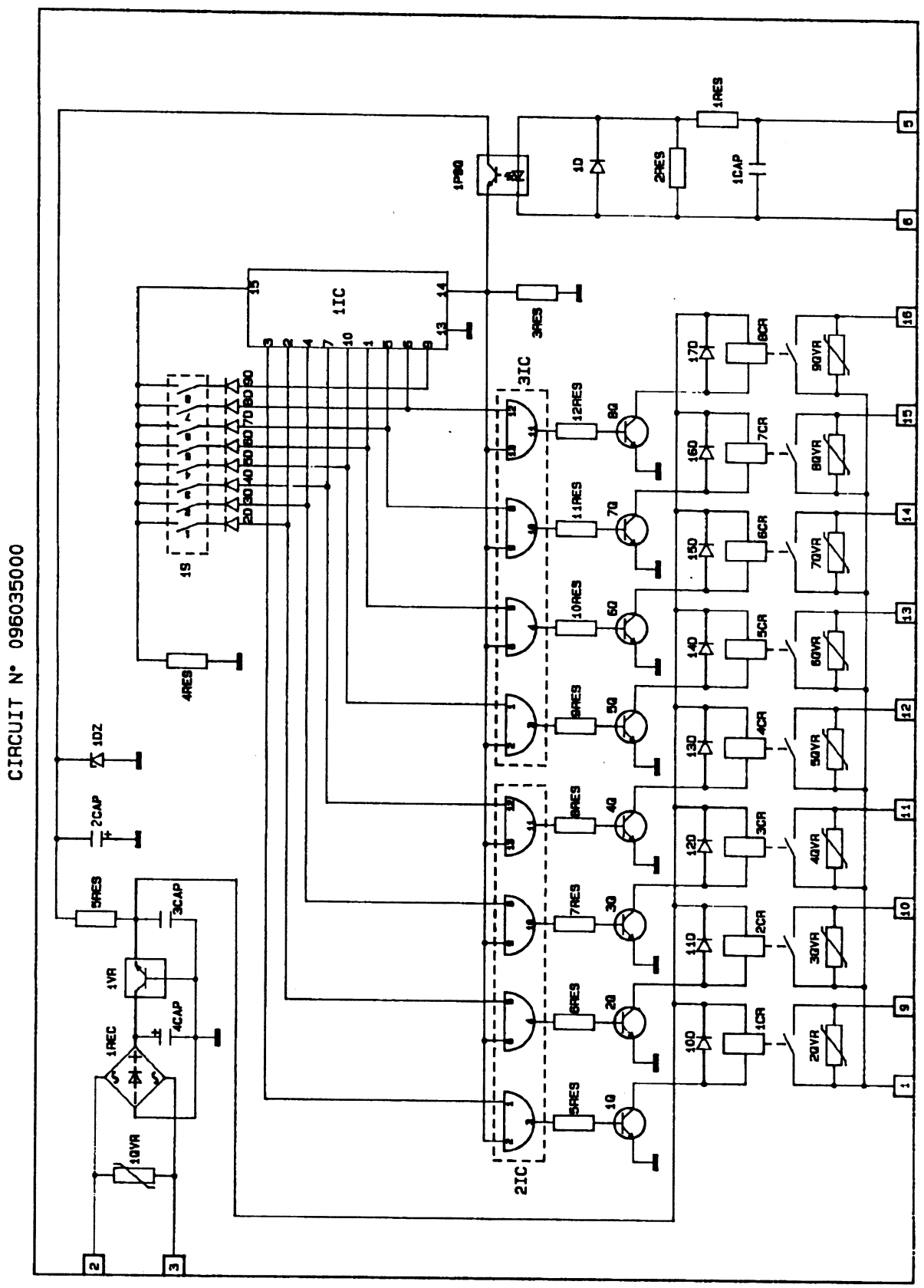

PROGRAMMABLE SEQUENCER - LEGEND

1PSQ - 465501530 - PHOTON COUPLED ISOLATOR - H11B1

1D-10D-11D-12D-13D-14D-15D-16D-17D - 464001030 - DIODE - 1N4004

2D-3D-4D-5D-6D-7D-8D-9D - 464001040 - DIODE - 1N4148

1DZ - 464021090 - ZENER DIODE - 12V-0.4W

1REC - 464011000 - RECTIFIER BRIDGE - WL005

1Q-2Q-3Q-4Q-5Q-6Q-7Q-8Q - 465121100 - TRANSISTOR DARLINGTON - MPSA14

1IC - 461150010 - INTEGRATED CIRCUIT - 4017

2IC-3IC - 461130090 - INTEGRATED CIRCUIT - 4081B

1VR - 461020160 - VOLTAGE REGULATOR - 7824

4CAP - 462154270 - CAPACITOR - 470microF.-63V

2CAP - 462161160 - CAPACITOR - 10microF.-35V

1CAP-3CAP - 462124110 - CAPACITOR - 0.47microF.-63V

5RES - 463100420 - RESISTOR - 1KOHM-0.25W

1RES-2RES - 463100460 - RESISTOR - 2.2KOHM- 0.25W

3RES - 463100500 - RESISTOR - 4.7KOHM-0.25W

5RES-6RES-7RES-8RES-9RES-10RES-11RES-12RES - 463100580 - RESISTOR - 22KOHM-0.25W

4RES - 463100660 - RESISTOR - 100KOHM-0.25W

1S - 445311000 - DIP SWITCH - 8 SWITCH

1CR-2CR-3CR-4CR-5CR-6CR-7CR-8CR - 444022210 - RELAY - MZPA00147 24VDC

2QVR-3QVR-4QVR-5QVR-6QVR-7QVR-8QVR-9QVR - 464281130 - VARISTOR - 250V-90J

1QVR - 464281101 - VARISTOR - 39V-70J

482605700 - SOCKET - 14 PIN

482605800 - SOCKET - 16 PIN

- CAPACITANCE LEVEL PROBE - cod.096011002

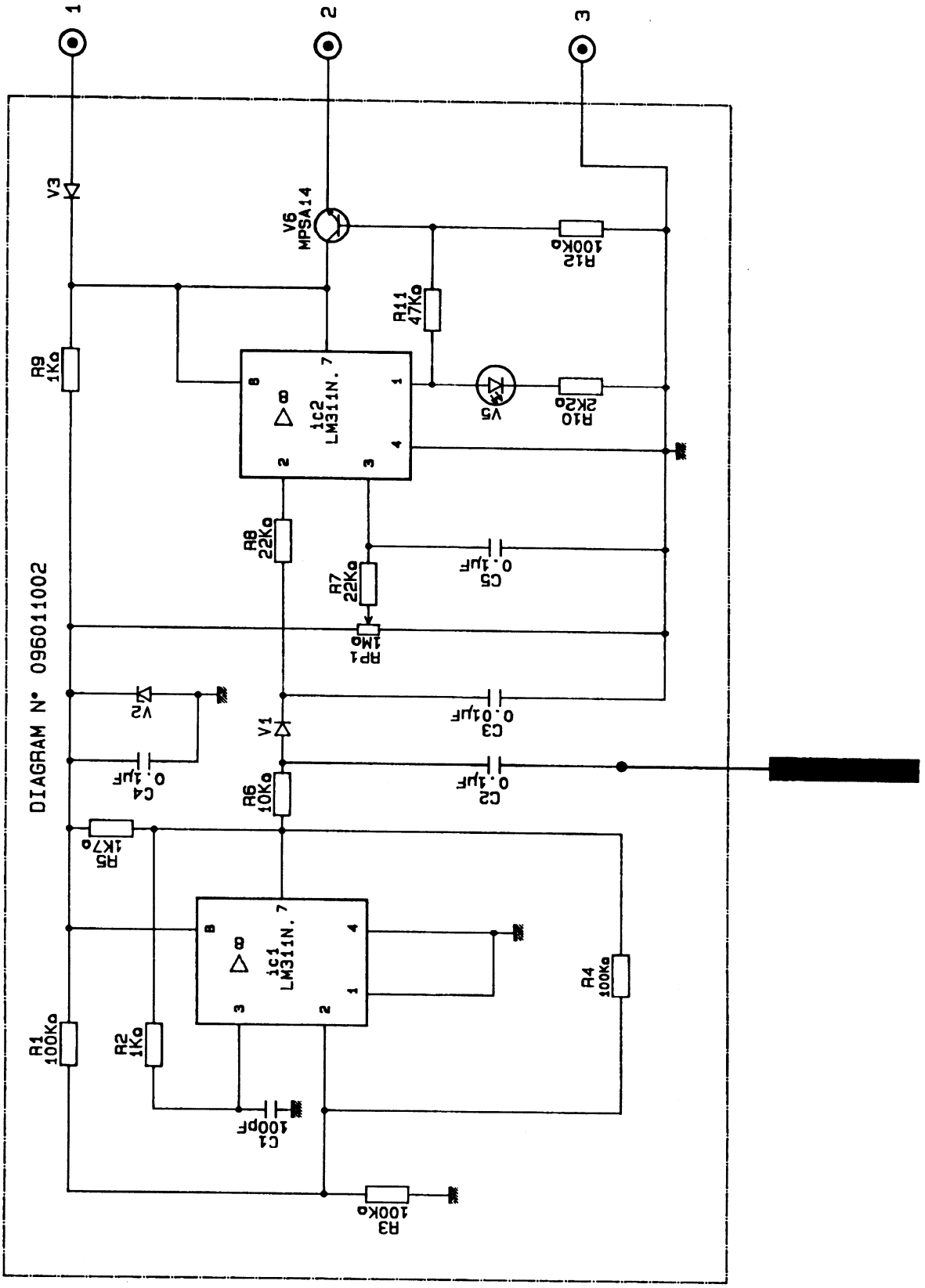

CAPACITANCE LEVEL PROBE - LEGEND

C1 - 462123001 - CAPACITOR - 100pF.

C2-C4-C5 - 462123080 - CAPACITOR - 0.1microF.

C3 - 462123040 - CAPACITOR - 0.01microF.

iC1-iC2 - 461010000 - INTEGRATED CIRCUIT - LM311N

R1-R3-R4 - 463100160 - RESISTOR - 100KOHM-0.25W

R2-R9 - 463100420 - RESISTOR - 1KOHM-0.25W

R5 - 463100500 - RESISTOR - 4.7KOHM-0.25W

R6 - 463100540 - RESISTOR - 10KOHM-0.25W

R7-R8 - 463100580 - RESISTOR - 22KOHM-0.25W

R10 - 463100460 - RESISTOR - 2.2KOHM-0.25W

R11 - 463100620 - RESISTOR - 47KOHM-0.25W

RP1 - 463713230 - TRIMMER - 1MOHM

V1 - 464101100 - DIODE - 0A90

V2 - 464021090 - DIODE 1N 963 - 0.4W

V3 - 464001010 - DIODE 1N 4002

V5 - 464051000 - LED DIAM. 5mm. RED

V6 - 465121100 - TRANSISTOR DARLINGTON MPSA14

11. MAIN CONTROL PANEL

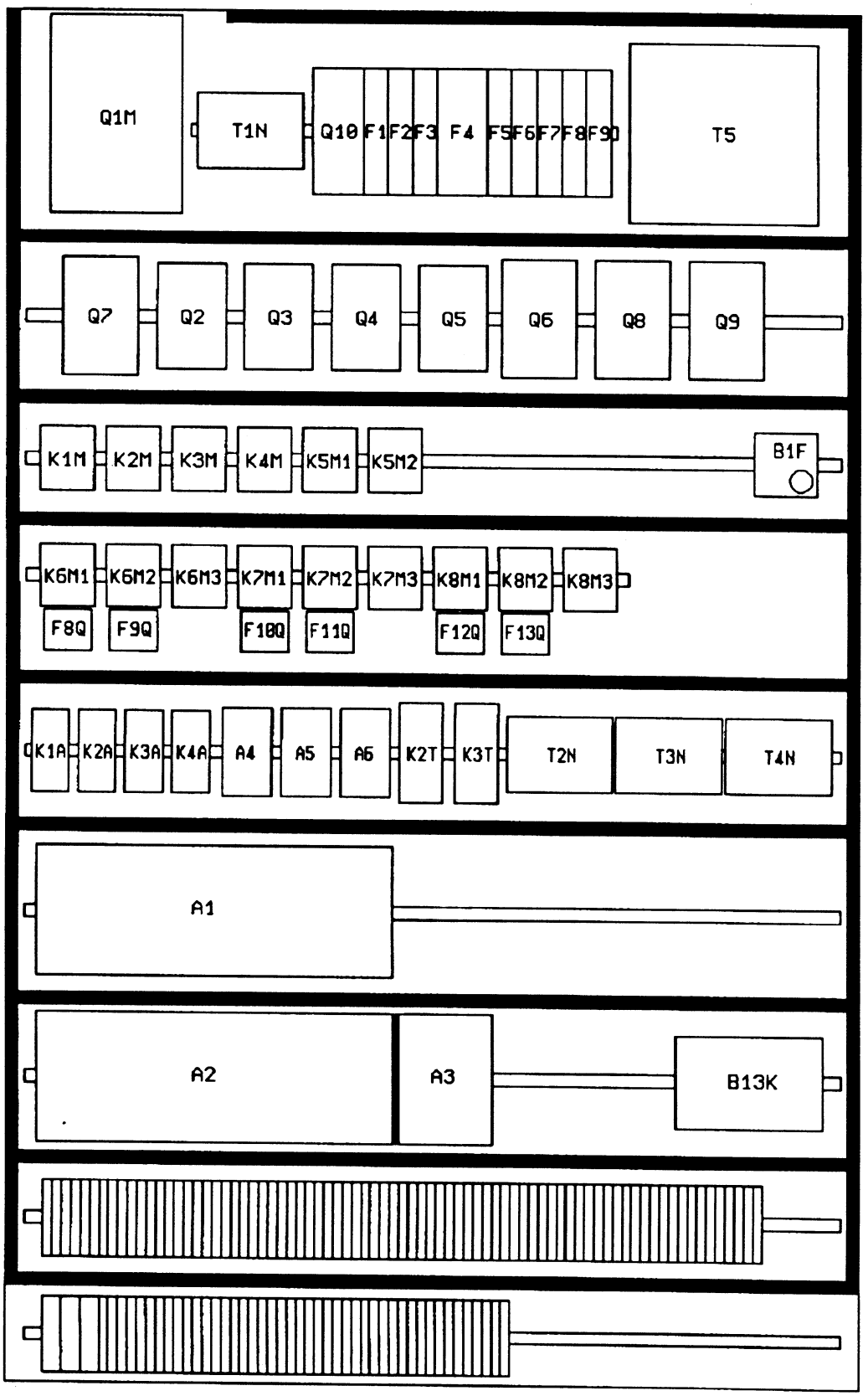

11.1. Electrical control station external connection

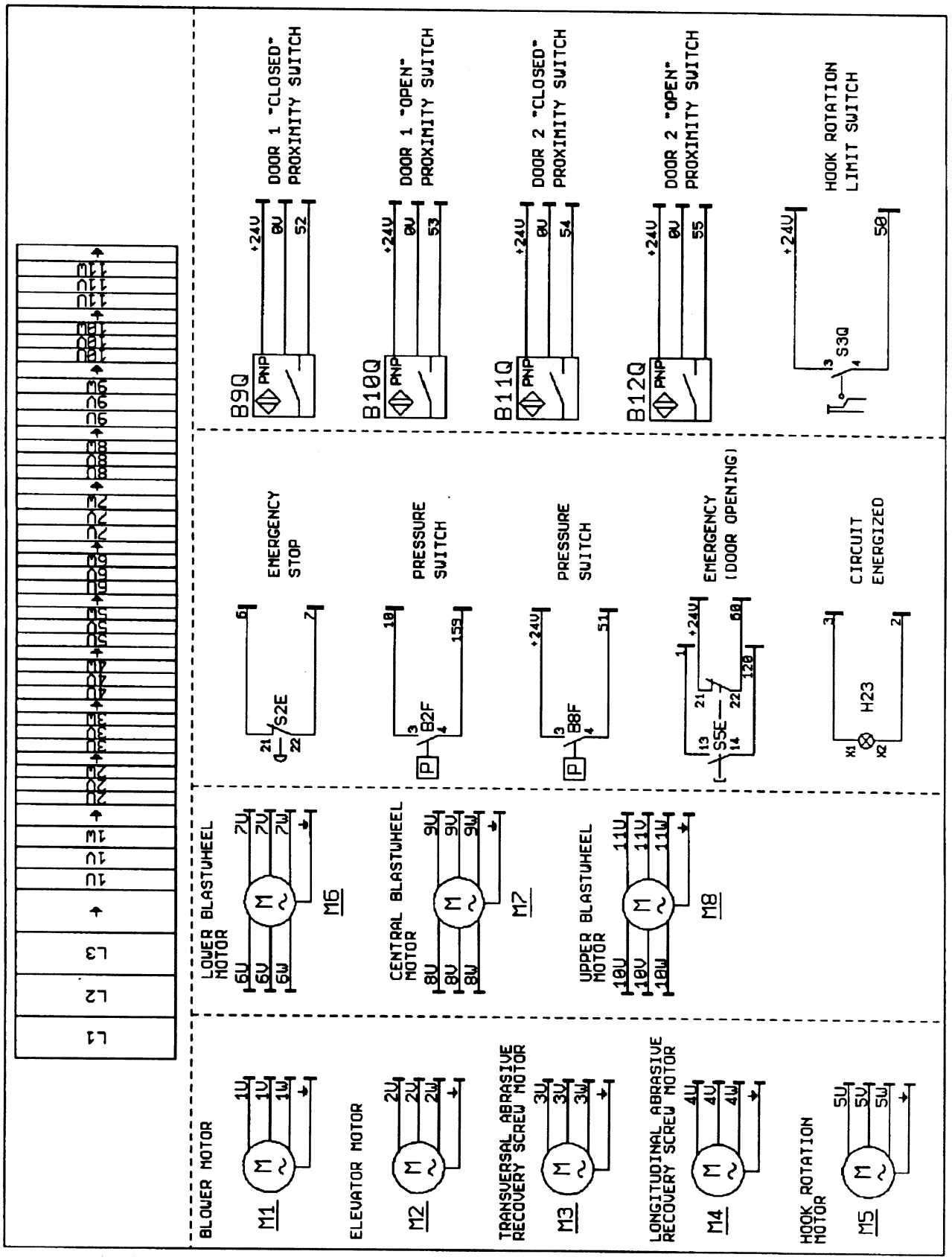

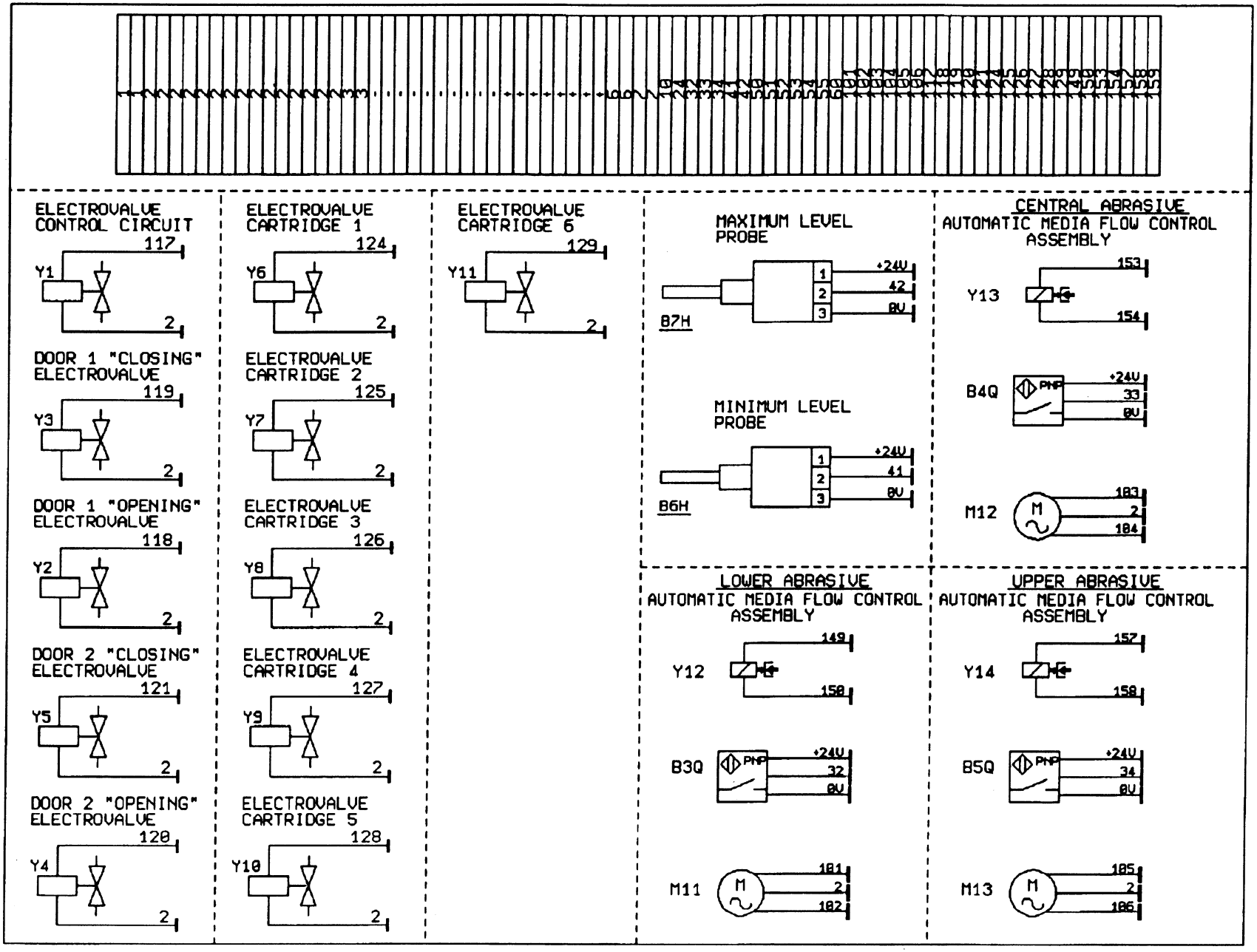
ELECTROVALVE CONTROL CIRCUIT
117
Y1
2
DOOR 1 "CLOSING" ELECTROVALVE
119
Y3
2
DOOR 1 "OPENING" ELECTROVALVE
118
Y2
2
DOOR 2 "CLOSING" ELECTROVALVE
121
Y5
2
DOOR 2 "OPENING" ELECTROVALVE
120
Y4
2
ELECTROVALVE CARTRIDGE 1
124
Y6
2
ELECTROVALVE CARTRIDGE 2
125
Y7
2
ELECTROVALVE CARTRIDGE 3
126
Y8
2
ELECTROVALVE CARTRIDGE 4
127
Y9
2
ELECTROVALVE CARTRIDGE 5
128
Y10
2
ELECTROVALVE CARTRIDGE 6
129
Y11
2
MAXIMUM LEVEL PROBE
B7H
1
2
3
+24V
42
0V
MINIMUM LEVEL PROBE
B6H
1
2
3
+24V
41
0V
CENTRAL ABRASIVE
AUTOMATIC MEDIA FLOW CONTROL ASSEMBLY
Y13
153
154
B4Q
PNP
+24V
33
0V
M12
M
183
2
184
LOWER ABRASIVE
AUTOMATIC MEDIA FLOW CONTROL ASSEMBLY
Y12
149
150
B3Q
PNP
+24V
32
0V
M11
M
181
2
182
UPPER ABRASIVE
AUTOMATIC MEDIA FLOW CONTROL ASSEMBLY
Y14
157
158
B5Q
PNP
+24V
34
0V
M13
M
185
2
186

```
*
TELEMECANIQUE : TSX17_20  L. A CONTACTS          "M.RAIL 1500/3370"   PAGE : 1

 LABEL :  1                "AP.EMERG.PORTE"

!I1,17                                                                B100       !
!                                                                                !
+-]/[--+------+------+------+------+------+------+------+------+---( S  )----+
!                                                                                !
!                                                                                !
!B100   I0,3   I1,4                                                    B100       !
!                                                                                !
+-] [--+-] [--+-]/[--+------+------+------+------+------+------+---( R  )----+
!                                                                                !
!                                                                                !


 LABEL :  2                "SEGN.INT.SICUR."

!I0,19                                                                O1,8       !
!                                                                                !
+-] [--+------+------+------+------+------+------+------+------+---(    )----+
!                            !                                                   !
!                            !                                                   !
!I0,19  B124   SY6            !                                                   !
!                            !                                                   !
+-]/[--+-] [--+-] [--+------+                                                    +
!                            !                                                   !
!                            !                                                   !
!B100   B126                  !                                                   !
!                            !                                                   !
+-] [--+-] [--+------+------+                                                    +
!                                                                                !
!                                                                                !


 LABEL :  3                "INIZO CICLO"

!I0,3   I0,0   I1,4   I0,19  B100   B124   B7      T 11           B101       !
!                                                  +========+                   !
+-] [--+-] [--+-] [--+-]/[--+-]/[--+-]/[--+-]/[--+-+ E    D +--+---(    )----+
!      !                                          ! !        !                  !
!      !                                          ! !        !                  !
!B102  !                                          ! !100ms=TB!                  !
!      !                                          ! !        !                  !
+-] [--+                                          +-+ C    R +--+               +
!                                                 ! !        !                  !
!                                                 ! !        !                  !
!                                                 ! !P =50   !                  !
!                                                 ! !        !                  !
+                                                 + !        !                  +
!                                                 ! +========+                  !
!                                                 !                             !
!                                                 !                 B102        !
!                                                 !                             !
+                                                 +------+------+---(    )----+
!                                                                                !
!                                                                                !
```

```
  4                "START CY.LAVORO"

        I1,7   B101   B122                                   B103        !
                                                                         !
-------+-] [--+-] [--+-]/[--+------+------+------+------+---(     )----+
                                                                         !
                                                                         !
                                                                         !
                                                                         !
                                                                         +
                                                                         !
                                                                         !

  5                "SEGN.IN.CY.F.S."

B101                                                          O1,7       !
                                                                         !
-]/[--+------+------+------+------+------+------+------+---(     )----+
                     !                                                   !
                     !                                                   !
B120   I1,4   SY6    !                                                   !
                     !                                                   !
-]/[--+-]/[--+-] [--+                                                    +
              !                                                          !
              !                                                          !
B122   I1,4   !                                                          !
              !                                                          !
-] [--+-] [--+                                                           +
                                                                         !
                                                                         !

  10               "CONTR.LIVELLO"

                                                                         !
                                                                         !
                                                                         +
                                                                         !
                                                                         !
I0,21  SY6                                                    O1,5       !
                                                                         !
-]/[--+-] [--+------+------+------+------+------+------+---(     )----+
                                                                         !
                                                                         !
SY6                                                           O1,6       !
                                                                         !
-] [--+------+------+------+------+------+------+------+---(     )----+
                                                                         !
                                                                         !
```

LABEL : 11 "PORTE CHIUSE-AP"

```
!I1,9   I1,11                                                    B104       !
!                                                                           !
+-] [--+-] [--+------+------+------+------+------+------+------+---(    )----+
!                                                                           !
!                                                                           !
!I1,10  I1,12                                                    B105       !
!                                                                           !
+-] [--+-] [--+------+------+------+------+------+------+------+---(    )----+
!                                                                           !
!                                                                           !
```

LABEL : 12 "CONT.ROT.GANCIO"

```
!SY6                                                   B107     B106       !
!                                                                           !
+-] [--+------+------+------+------+------+------+------+-]/[--+---(    )----+
!                                                       !                   !
!                                                       !                   !
!                                                       !         B107      !
!                                                       !                   !
+                                                       +------+---(    )----+
!                                                                           !
!                                                                           !
!B106                                                                       !
!                                                 +=======================+ !
+-] [--+------+------+------+------+------+------+-+W110  +  1 -> W110     +-+
!                                                 +=======================+ !
!                                                                           !
!  W110                                                                     !
! +========+                                      +=======================+ !
+-+   >=   +--+------+------+------+------+------+-+0 -> W110              +-+
! +========+                                      +=======================+ !
!  90                                                                       !
```

LABEL : 13 "ROTAZ. ORARIA"

```
!I1,0   I1,1     W110          W110                                B108       !
!                +========+    +========+                                     !
+-]/[--+-]/[--+-+   >    +--+-+   <    +--+------+------+------+---(    )----+
!                +========+    +========+                                     !
!                 1             45                                            !
!B108   B104   I0,0   I0,19  O2,2   B132   O0,1   I1,3            O0,0       !
!                                                                             !
+-] [--+-] [--+-] [--+-]/[--+-]/[--+-]/[--+-]/[--+-]/[--+------+---(    )----+
!      !      !                                   !      !                    !
!      !      !                                   !      !                    !
!I1,0  !      !                                   !I1,4  !                    !
!      !      !                                   !      !                    !
+-] [--+      +                                   +-] [--+                    +
!             !                                                               !
!             !                                                               !
!O2,1         !                                                               !
!             !                                                               !
+-] [--+------+                                                               +
!                                                                             !
!                                                                             !
```

LABEL : 14 "ROT.ANTIORARIA"

```
!I1,0   I1,1     W110          W110                                B109       !
!                +========+    +========+                                     !
+-]/[--+-]/[--+-+   >    +--+-+   <    +--+------+------+------+---(    )----+
!                +========+    +========+                                     !
!                 46            90                                            !
!B109   B104   I0,0   I0,19  O2,1   B132   O0,0   I1,3            O0,1       !
!                                                                             !
+-] [--+-] [--+-] [--+-]/[--+-]/[--+-]/[--+-]/[--+-]/[--+------+---(    )----+
!      !      !                                   !      !                    !
!      !      !                                   !      !                    !
!I1,1  !      !                                   !I1,4  !                    !
!      !      !                                   !      !                    !
+-] [--+      +                                   +-] [--+                    +
!             !                                                               !
!             !                                                               !
!O2,2         !                                                               !
!             !                                                               !
+-] [--+------+                                                               +
!                                                                             !
!                                                                             !
```

LABEL : 15 "CHIUS.MAN.PORTE"

```
!I1,6   I1,7   I1,4   B100   B104   I1,5   I1,8   B120   B124     B110        !
!                                                                             !
+-] [--+-] [--+-]/[--+-]/[--+-]/[--+-]/[--+-]/[--+-]/[--+-]/[--+---(     )----+
!      !                                                                      !
!      !                                                                      !
!B110  !                                                                      !
!      !                                                                      !
+-] [--+                                                                      +
!                                                                             !
!                                                                             !
```

LABEL : 16 "APERT.MAN.PORTE"

```
!I1,5   I1,7   I1,4   B105   I1,6   B120   B124                    B111        !
!                                                                             !
+-] [--+-] [--+-]/[--+-]/[--+-]/[--+-]/[--+-]/[--+------+------+---(     )----+
!      !                                                                      !
!      !                                                                      !
!B111  !                                                                      !
!      !                                                                      !
+-] [--+                                                                      +
!                                                                             !
!                                                                             !
```

LABEL : 17 "CHIUS. PORTA 1"

```
!B101   B103          B112   I1,8   I1,9                          O2,2        !
!                                                                             !
+-] [--+-] [--+------+-]/[--+-]/[--+-]/[--+------+------+------+---(     )----+
!             !                                                               !
!             !                                                               !
!B110         !                                                               !
!             !                                                               !
+-] [--+------+                                                               +
!             !                                                               !
!             !                                                               !
!B115         !                                                               !
!             !                                                               !
+-] [--+------+                                                               +
!                                                                             !
!                                                                             !
```

LABEL : 18 "CHIUS. PORTA 2"

```
!B101   B103   I1,9   I1,8   I1,11  B113                          O2,4        !
!                                                                             !
+-] [--+-] [--+-] [--+-]/[--+-]/[--+-]/[--+------+------+------+---(     )----+
!             !                                                               !
!             !                                                               !
!B110         !                                                               !
!             !                                                               !
+-] [--+------+                                                               +
!             !                                                               !
!             !                                                               !
!B114         !                                                               !
!             !                                                               !
+-] [--+------+                                                               +
!                                                                             !
!                                                                             !
```

LABEL : 19 "APERT. PORTA 2"

```
!B111          I1,8   I1,12  B114                                O2,3        !
!                                                                             !
+-] [--+------+-]/[--+-]/[--+-]/[--+------+------+------+------+---(     )----+
!      !                                                                      !
!      !                                                                      !
!B113  !                                                                      !
!      !                                                                      !
+-] [--+                                                                      +
!      !                                                                      !
!      !                                                                      !
!B123  !                                                                      !
!      !                                                                      !
+-] [--+                                                                      +
!      !                                                                      !
!      !                                                                      !
!B100  !                                                                      !
!      !                                                                      !
+-] [--+                                                                      +
!                                                                             !
!                                                                             !
```

LABEL : 20 "APERT. PORTA 1"

```
!B111          I1,12  I1,8   I1,10  B115                          O2,1        !
!                                                                             !
+-] [--+------+-] [--+-]/[--+-]/[--+-]/[--+------+------+------+---(     )----+
!      !                                                                      !
!      !                                                                      !
!B112  !                                                                      !
!      !                                                                      !
+-] [--+                                                                      +
!      !                                                                      !
!      !                                                                      !
!B123  !                                                                      !
!      !                                                                      !
+-] [--+                                                                      +
!      !                                                                      !
!      !                                                                      !
!B100  !                                                                      !
!      !                                                                      !
+-] [--+                                                                      +
!                                                                             !
!                                                                             !
```

LABEL : 21 "SIC.CH.PORTA 1"

```
!O2,2                  T 12                        I1,9           B112       !
!                      +========+                                            !
+-] [--+------+------+-+ E    D +--+------+------+-]/[--+------+---(     )----+
!                     ! !        !          !                                !
!                     ! !        !          !                                !
!                     ! !100ms=TB!          !                                !
!                     ! !        !          !                                !
+                     +-+ C    R +--+       +                                +
!                       !        !          !                                !
!                       !        !          !                                !
!                       !P =150  !          !                                !
!                       !        !          !                                !
+                       !        !          +                                +
!                       +========+          !                                !
!                                           !                                !
!B112   I1,10                               !                                !
!                                           !                                !
+-] [--+-]/[--+------+------+------+------+                                  +
!                                                                            !
!                                                                            !
```

LABEL : 22 "SIC.CH.PORTA 2"

```
!O2,4                    T 13                        I1,11            B113        !
!                        +========+                                                 !
+-] [--+------+------+-+ E    D +--+------+------+-]/[--+------+---(     )----+
!                     ! !        !          !                                     !
!                     ! !        !          !                                     !
!                     ! !100ms=TB!          !                                     !
!                     ! !        !          !                                     !
+                     +-+ C    R +--+       +                                     +
!                        !        !          !                                     !
!                        !        !          !                                     !
!                        !P =150  !          !                                     !
!                        !        !          !                                     !
+                        !        !          +                                     +
!                        +========+          !                                     !
!                                            !                                     !
!B113   I1,12                                !                                     !
!                                            !                                     !
+-] [--+-]/[--+------+------+------+------+                                         +
!                                                                                  !
!                                                                                  !
```

LABEL : 23 "SIC.AP.PORTA 2"

```
!O2,3                    T 14                        I1,12            B114        !
!                        +========+                                                 !
+-] [--+------+------+-+ E    D +--+------+------+-]/[--+------+---(     )----+
!                     ! !        !          !                                     !
!                     ! !        !          !                                     !
!                     ! !100ms=TB!          !                                     !
!                     ! !        !          !                                     !
+                     +-+ C    R +--+       +                                     +
!                        !        !          !                                     !
!                        !        !          !                                     !
!                        !P =150  !          !                                     !
!                        !        !          !                                     !
+                        !        !          +                                     +
!                        +========+          !                                     !
!                                            !                                     !
!B114   I1,11                                !                                     !
!                                            !                                     !
+-] [--+-]/[--+------+------+------+------+                                         +
!                                                                                  !
!                                                                                  !
```

LABEL : 24 "SIC.AP.PORTA 1"

```
!O2,1                    T 15                        I1,10          B115        !
!                        +========+                                             !
+-] [--+------+------+-+ E    D +--+------+------+-]/[--+------+---(     )----+
!                      ! !        !         !                                  !
!                      ! !        !         !                                  !
!                      ! !100ms=TB!         !                                  !
!                      ! !        !         !                                  !
+                      +-+ C    R +--+      +                                  +
!                        !        !         !                                  !
!                        !        !         !                                  !
!                        !P =150  !         !                                  !
!                        !        !         !                                  !
+                        !        !         +                                  +
!                        +========+         !                                  !
!                                           !                                  !
!B115   I1,9                                !                                  !
!                                           !                                  !
+-] [--+-]/[--+------+------+------+------+                                    +
!                                                                              !
!                                                                              !
```

LABEL : 25 "T.SIC.AP.CH.POR"

```
!B112                                                                          !
!                                                                              !
+-] [--+                                                                       +
!      !                                                                       !
!      !                                                                       !
!B113  !                                                          B124         !
!      !                                                                       !
+-] [--+------+------+------+------+------+------+------+------+---( S  )----+
!      !                                                                       !
!      !                                                                       !
!B114  !                                                                       !
!      !                                                                       !
+-] [--+                                                                       +
!      !                                                                       !
!      !                                                                       !
!B115  !                                                                       !
!      !                                                                       !
+-] [--+                                                                       +
!                                                                              !
!                                                                              !
```

LABEL : 26 "PRESS.PORTE-C.S"

```
!B124   I0,3   I1,4                                                B124      !
!                                                                            !
+-] [--+-] [--+-]/[--+------+------+------+------+------+------+---( R  )----+
!                                                                            !
!                                                                            !
!B100   B104   B111   B123                                         O2,0      !
!                                                                            !
+-]/[--+-] [--+-]/[--+-]/[--+------+------+------+------+------+---(    )----+
!                                                                            !
!                                                                            !
!                                                                            !
!                                                                            !
+                                                                            +
!                                                                            !
!                                                                            !
!I0,0   I1,7   I1,8   B104   B100   I0,19  B122                    B116      !
!                                                                            !
+-] [--+-] [--+-] [--+-] [--+-]/[--+-]/[--+-]/[--+------+------+---(    )----+
!                                                                            !
!                                                                            !
```

LABEL : 27 "START AUT.T.INF"

```
!B103   B116                                          T 16          B117    !
!                                                     +========+             !
+-] [--+-] [--+------+------+------+------+------+-+ E    D +--+---(    )----+
!                                                 ! !        !               !
!                                                 ! !        !               !
!                                                 ! ! 10ms=TB!               !
!                                                 ! !        !               !
+                                                 +-+ C    R +--+            +
!                                                   !        !               !
!                                                   !        !               !
!                                                   !P =50   !               !
!                                                   !        !               !
+                                                   !        !               +
!                                                   +========+               !
!                                                                            !
```

LABEL : 28 "START AUT.T.CEN"

```
!B103   B116                                          T 17            B118       !
!                                                     +========+                 !
+-] [--+-] [--+------+------+------+------+------+-+ E    D +--+---(     )----+
!                                                  ! !        !                 !
!                                                  ! !        !                 !
!                                                  ! !100ms=TB!                 !
!                                                  ! !        !                 !
+                                                  +-+ C    R +--+              +
!                                                     !        !                 !
!                                                     !        !                 !
!                                                     !P =45   !                 !
!                                                     !        !                 !
+                                                     !        !                 +
!                                                     +========+                 !
!                                                                                !
```

LABEL : 29 "START AUT.T.SUP"

```
!B103   B116                                          T 18            B119       !
!                                                     +========+                 !
+-] [--+-] [--+------+------+------+------+------+-+ E    D +--+---(     )----+
!                                                  ! !        !                 !
!                                                  ! !        !                 !
!                                                  ! !100ms=TB!                 !
!                                                  ! !        !                 !
+                                                  +-+ C    R +--+              +
!                                                     !        !                 !
!                                                     !        !                 !
!                                                     !P =85   !                 !
!                                                     !        !                 !
+                                                     !        !                 +
!                                                     +========+                 !
!                                                                                !
```

LABEL : 30 "TURBINA INFER."

```
!I0,5   B8     B131   I1,4                  I0,6   B116   B7       B0            !
!                                                                               !
+-] [--+-]/[--+-]/[--+-]/[--+------+------+-] [--+-] [--+-]/[--+---(     )----+
!              !              !                                                 !
!              !              !                                                 !
!B0            !              !                                                 !
!              !              !                                                 !
+-] [--+------+               +                                                 +
!                             !                                                 !
!                             !                                                 !
!B117                         !                                                 !
!                             !                                                 !
+-] [--+------+------+------+                                                   +
!                                                                               !
!                                                                               !
```

LABEL : 31 "COM.TURBINA INF"

```
!B0      I0,4   O0,3   B7                                          O0,2        !
!                                                                              !
+-] [--+-] [--+-]/[--+-]/[--+------+------+------+------+------+---(     )----+
!      !                                                                       !
!      !                                                                       !
!      !I0,4   O0,2                                                  O0,3      !
!      !                                                                       !
+      +-]/[--+-]/[--+------+------+------+------+------+------+---(     )----+
!                                                                              !
!                                                                              !
```

LABEL : 40 "TURBINA CENTR."

```
!I0,7   B8     B131   I1,4                 I0,8   B116   B7       B1          !
!                                                                              !
+-] [--+-]/[--+-]/[--+-]/[--+------+------+-] [--+-] [--+-]/[--+---(     )----+
!             !              !                                                 !
!             !              !                                                 !
!B1           !              !                                                 !
!             !              !                                                 !
+-] [--+------+              +                                                 +
!                            !                                                 !
!                            !                                                 !
!B117   I0,6                 !                                                 !
!                            !                                                 !
+-] [--+-]/[--+------+------+                                                  +
!             !                                                                !
!             !                                                                !
!B118         !                                                                !
!             !                                                                !
+-] [--+------+                                                                +
!                                                                              !
!                                                                              !
```

LABEL : 41 "COM.TURBINA CEN"

```
!B1      I0,4   O0,5   B7                                          O0,4        !
!                                                                              !
+-] [--+-] [--+-]/[--+-]/[--+------+------+------+------+------+---(     )----+
!      !                                                                       !
!      !                                                                       !
!      !I0,4   O0,4                                                  O0,5      !
!      !                                                                       !
+      +-]/[--+-]/[--+------+------+------+------+------+------+---(     )----+
!                                                                              !
!                                                                              !
```

LABEL : 49 "GEST.ESCL.T.SUP"

```
!I0,6   I0,8   B117                                                B133        !
!                                                                              !
+-]/[--+-]/[--+-] [--+------+------+------+------+------+------+---(     )----+
!                    !                                                         !
!                    !                                                         !
!I0,6   B118         !                                                         !
!                    !                                                         !
+-]/[--+-] [--+------+                                                         +
!      !                                                                       !
!      !                                                                       !
!I0,8  !                                                                       !
!      !                                                                       !
+-]/[--+                                                                       +
!                                                                              !
!                                                                              !
```

LABEL : 50 "TURBINA SUPER."

```
!I0,9   B8     B131   I1,4                 I0,10  B116   B7       B2          !
!                                                                              !
+-] [--+-]/[--+-]/[--+-]/[--+------+------+-] [--+-] [--+-]/[--+---(     )----+
!              !              !                                                !
!              !              !                                                !
!B2            !              !                                                !
!              !              !                                                !
+-] [--+------+               +                                                +
!                             !                                                !
!                             !                                                !
!                      B119   !                                                !
!                             !                                                !
+------+------+------+-] [--+                                                +
!                    !      !                                                !
!                    !      !                                                !
!                    !B133  !                                                !
!                    !      !                                                !
+                    +-] [--+                                                +
!                                                                              !
!                                                                              !
```

LABEL : 51 "COM.TURBINA SUP"

```
!B2     I0,4   O0,7   B7                                           O0,6        !
!                                                                              !
+-] [--+-] [--+-]/[--+-]/[--+------+------+------+------+------+---(     )----+
!      !                                                                       !
!      !                                                                       !
!      !I0,4   O0,6                                                O0,7        !
!      !                                                                       !
+      +-]/[--+-]/[--+------+------+------+------+------+------+---(     )----+
!                                                                              !
!                                                                              !
```

LABEL : 52 "MEM.TURB.RUN"

```
!B0                                                                          !
!                                                                            !
+-] [--+                                                                     +
!      !                                                                     !
!      !                                                                     !
!B1    !                                                          B120       !
!      !                                                                     !
+-] [--+------+------+------+------+------+------+------+------+---( S  )----+
!      !                                                                     !
!      !                                                                     !
!B2    !                                                                     !
!      !                                                                     !
+-] [--+                                                                     +
!                                                                            !
!                                                                            !
!B121                                                                        !
!                                                                            !
+-] [--+------+------+------+------+------+------+------+------+---( R  )----+
!                                                                            !
!                                                                            !
```

LABEL : 53 "CONS.AP.PORTE"

```
!B0     B1     B2                    T 19                          B121      !
!                                    +========+                              !
+-]/[--+-]/[--+-]/[--+------+------+-+ E    D +--+------+------+---(    )----+
!                                   ! !        !                            !
!                                   ! !        !                            !
!                                   ! !100ms=TB!                            !
!                                   ! !        !                            !
+                                   +-+ C    R +--+                         +
!                                     !        !                            !
!                                     !        !                            !
!                                     !P =300  !                            !
!                                     !        !                            !
+                                     !        !                            +
!                                     +========+                            !
!                                                                            !
```

LABEL : 54 "TEMPI GIRI TURB"

```
!I0,4                                                                        !
!                                                  +======================+ !
+-]/[--+------+------+------+------+------+------+-+250 -> T19,P          +-+
!                                                  +======================+ !
!                                                                            !
!I0,4                                                                        !
!                                                  +======================+ !
+-] [--+------+------+------+------+------+------+-+350 -> T19,P          +-+
!                                                  +======================+ !
!                                                                            !
```

LABEL : 60 "IMP.CAMBIO VEL."

```
!I0,4                                                    B4       B3          !
!                                                                             !
+-] [--+------+------+------+------+------+------+------+-]/[--+---(     )----+
!                                                        !                    !
!                                                        !                    !
!                                                        !         B4         !
!                                                        !                    !
+                                                        +------+---(     )----+
!                                                                             !
!                                                                             !
!I0,4                                                    B6       B5          !
!                                                                             !
+-]/[--+------+------+------+------+------+------+------+-]/[--+---(     )----+
!                                                        !                    !
!                                                        !                    !
!                                                        !         B6         !
!                                                        !                    !
+                                                        +------+---(     )----+
!                                                                             !
!                                                                             !
```

LABEL : 70 "APPOGGIO LAB 60"

```
!B3                                                                   B7      !
!                                                                             !
+-] [--+------+------+------+------+------+------+------+------+---(     )----+
!      !                                                                      !
!      !                                                                      !
!B5    !                                                                      !
!      !                                                                      !
+-] [--+                                                                      +
!                                                                             !
!                                                                             !
```

LABEL : 80 "TEMPO COM.TURB."

```
!I0,5   B0                                   M 0                      B8     !
!                                            +========+                       !
+-] [--+-] [--+------+------+------+------+-+ S^   R +--+------+---(     )----+
!              !                             !        !                       !
!              !                             !        !                       !
!I0,7   B1     !                             !100ms=TB!                       !
!              !                             !        !                       !
+-] [--+-] [--+                              !        !                       +
!              !                             !        !                       !
!              !                             !        !                       !
!I0,9   B2     !                             !P =30   !                       !
!              !                             !        !                       !
+-] [--+-] [--+                              !        !                       +
!                                            +========+                       !
!                                                                             !
```

LABEL : 90 "TEMPO GRAN.INF."

```
!B0                                                T 1                    B9          !
!                                                  +========+                          !
+-] [--+------+------+------+------+------+-+ E    D +--+------+---(     )----+
!                                          ! !        !                              !
!                                          ! !        !                              !
!                                          ! !100ms=TB!                              !
!                                          ! !        !                              !
+                                          +-+ C    R +--+                           +
!                                            !        !                              !
!                                            !        !                              !
!                                            !P =30   !                              !
!                                            !        !                              !
+                                            !        !                              +
!                                            +========+                              !
!                                                                                    !
```

LABEL : 100 "TEMPO GRAN.CENT"

```
!B1                                                T 2                    B10         !
!                                                  +========+                          !
+-] [--+------+------+------+------+------+-+ E    D +--+------+---(     )----+
!                                          ! !        !                              !
!                                          ! !        !                              !
!                                          ! !100ms=TB!                              !
!                                          ! !        !                              !
+                                          +-+ C    R +--+                           +
!                                            !        !                              !
!                                            !        !                              !
!                                            !P =30   !                              !
!                                            !        !                              !
+                                            !        !                              +
!                                            +========+                              !
!                                                                                    !
```

LABEL : 110 "TEMPO GRAN.SUP."

```
!B2                                                T 3                    B11         !
!                                                  +========+                          !
+-] [--+------+------+------+------+------+-+ E    D +--+------+---(     )----+
!                                          ! !        !                              !
!                                          ! !        !                              !
!                                          ! !100ms=TB!                              !
!                                          ! !        !                              !
+                                          +-+ C    R +--+                           +
!                                            !        !                              !
!                                            !        !                              !
!                                            !P =30   !                              !
!                                            !        !                              !
+                                            !        !                              +
!                                            +========+                              !
!                                                                                    !
```

LABEL : 120 "COM. GRANIGLIE"

```
!I1,3   I1,4                B44                          B9       O1,2       !
!
+-] [--+-]/[--+------+------+-]/[--+------+------+------+-] [--+---(    )----+
!             !                                        !                     !
!             !                                        !                     !
!B0           !                                        !B10     O1,3        !
!             !                                        !
+-] [--+------+                                        +-] [--+---(    )----+
!                                                      !                     !
!                                                      !                     !
!                                                      !B11     O1,4        !
!                                                      !
+                                                      +-] [--+---(    )----+
!                                                                            !
!                                                                            !
```

LABEL : 121 "TEMPO SABBIAT."

```
!I1,2                                                              B122      !
!
+-] [--+------+------+------+------+------+------+------+------+---( S  )----+
!                                                                            !
!                                                                            !
!B105   I1,4                         B122                           B122     !
!
+-] [--+-]/[--+------+------+------+-] [--+------+------+------+---( R  )----+
!             !                                                              !
!             !                                                              !
!I1,7   I1,4  !                                                              !
!             !                                                              !
+-]/[--+-] [--+                                                              +
!                                                                            !
!                                                                            !
!B101   B122   B121   I1,4                                          B123     !
!
+-] [--+-] [--+-] [--+-] [--+------+------+------+------+------+---(    )----+
!                                                                            !
!                                                                            !
```

LABEL : 122 "C.SEQUENZIATORE"

```
!I0,2                                                              O1,9      !
!
+-] [--+------+------+------+------+------+------+------+------+---( S  )----+
!                                                                            !
!                                                                            !
!B125                                                              O1,9      !
!
+-] [--+------+------+------+------+------+------+------+------+---( R  )----+
!                                                                            !
!                                                                            !
```

LABEL : 123 "PROL.TEMPO IMP."

```
!I0,1                                                T 20                    B125        !
!                                                    +========+                           !
+-] [--+------+------+------+------+------+-+ E    D +--+------+---(     )----+
!                                            ! !        !                                !
!                                            ! !        !                                !
!                                            ! ! 10ms=TB!                                !
!                                            ! !        !                                !
+                                            +-+ C    R +--+                              +
!                                              !        !                                !
!                                              !        !                                !
!                                              !P =20   !                                !
!                                              !        !                                !
+                                              !        !                                +
!                                              +========+                                !
!                                                                                        !
```

LABEL : 124 "CLOCK X SEGNAL."

```
!SY5                                                                                    !
!                                                   +=======================+           !
+-] [--+------+------+------+------+------+------+-+W111  +  1 -> W111     +-+
!                                                   +=======================+           !
!                                                                                        !
!  W111                                                                                  !
! +========+                                        +=======================+           !
+-+   >=   +--+------+------+------+------+------+-+0 -> W111               +-+
! +========+                                        +=======================+           !
!  8                                                                                     !
!  W111                                                                                  !
! +========+                                                          B126               !
+-+   =    +--+------+------+------+------+------+------+------+---( S   )----+
! +========+                                                                             !
!  4                                                                                     !
!  W111                                                                                  !
! +========+                                                          B126               !
+-+   =    +--+------+------+------+------+------+------+------+---( R   )----+
! +========+                                                                             !
!  8                                                                                     !
```

LABEL : 125 "IMP.PR. LANCIO"

```
!I1,3                                                          B128     B127        !
!                                                                                    !
+-] [--+------+------+------+------+------+------+------+-]/[--+---(     )----+
!                                                          !                         !
!                                                          !                         !
!                                                          !         B128            !
!                                                          !                         !
+                                                          +------+---(     )----+
!                                                                                    !
!                                                                                    !
!I1,3                                                          B130     B129        !
!                                                                                    !
+-]/[--+------+------+------+------+------+------+------+-]/[--+---(     )----+
!                                                          !                         !
!                                                          !                         !
!                                                          !         B130            !
!                                                          !                         !
+                                                          +------+---(     )----+
!                                                                                    !
!                                                                                    !
```

LABEL : 126 "IMP.PR. LANCIO"

```
!B127                                                                   B131        !
!                                                                                    !
+-] [--+------+------+------+------+------+------+------+------+------+---(     )----+
!      !                                                                             !
!      !                                                                             !
!B129  !                                                                             !
!      !                                                                             !
+-] [--+                                                                             +
!                                                                                    !
!                                                                                    !
!I1,3   I0,0   I1,4                  B105                                B132        !
!                                                                                    !
+-] [--+-] [--+-]/[--+------+------+-]/[--+------+------+------+---(     )----+
!      !                                                                             !
!      !                                                                             !
!B132  !                                                                             !
!      !                                                                             !
+-] [--+                                                                             +
!                                                                                    !
!                                                                                    !
```

LABEL : 130 "IMPULSI POSIZ."

```
!I0,11                                                          B13      B12        !
!                                                                                   !
+-] [--+------+------+------+------+------+------+------+-]/[--+---(     )----+
!                                                          !                        !
!                                                          !                        !
!                                                          !         B13            !
!                                                          !                        !
+                                                          +------+---(     )----+
!                                                                                   !
!                                                                                   !
!I0,12                                                          B15      B14        !
!                                                                                   !
+-] [--+------+------+------+------+------+------+------+-]/[--+---(     )----+
!                                                          !                        !
!                                                          !                        !
!                                                          !         B15            !
!                                                          !                        !
+                                                          +------+---(     )----+
!                                                                                   !
!                                                                                   !
```

LABEL : 140 "IMPULSI POSIZ."

```
!I0,13                                                          B17      B16        !
!                                                                                   !
+-] [--+------+------+------+------+------+------+------+-]/[--+---(     )----+
!                                                          !                        !
!                                                          !                        !
!                                                          !         B17            !
!                                                          !                        !
+                                                          +------+---(     )----+
!                                                                                   !
!                                                                                   !
```

LABEL : 150 "SELEZ.SARACIN."

```
!I1,14                                                                  B20        !
!                                                                                   !
+-] [--+------+------+------+------+------+------+------+------+---(     )----+
!                                                                                   !
!                                                                                   !
!I1,15                                                                  B21        !
!                                                                                   !
+-] [--+------+------+------+------+------+------+------+------+---(     )----+
!                                                                                   !
!                                                                                   !
!I1,16                                                                  B22        !
!                                                                                   !
+-] [--+------+------+------+------+------+------+------+------+---(     )----+
!                                                                                   !
!                                                                                   !
```

LABEL : 170 "CONT.PORT.PROGR"

```
!I0,17                                                          B28      B27          !
!                                                                                      !
+-] [--+------+------+------+------+------+------+------+-]/[--+---(     )----+
!                                                              !                       !
!                                                              !                       !
!                                                              !         B28           !
!                                                              !                       !
+                                                              +------+---(     )----+
!                                                                                      !
!                                                                                      !
!B27                                                                                   !
!                                                          +=======================+ !
+-] [--+------+------+------+------+------+------+-+W1  +  1 -> W1          +-+
!                                                          +=======================+ !
!                                                                                      !
!                                                                                      !
! +========+                                               +=======================+ !
+-+W1 >= 11+--+------+------+------+------+------+-+1 -> W1                  +-+
! +========+                                               +=======================+ !
!                                                                                      !
```

LABEL : 180 "CONT.GRAN.INF."

```
!B12                          O0,8                                                     !
!                                                          +=======================+ !
+-] [--+------+------+------+-] [--+------+------+-+W2  +  1 -> W2          +-+
!                             !                            +=======================+ !
!                             !                                                        !
!                             !                                                        !
!                             !                                                        !
+                             +                                                        +
!                             !                                                        !
!                             !                                                        !
!                             !O0,9                                                    !
!                             !                            +=======================+ !
+                             +-] [--+------+------+-+W2  -  1 -> W2          +-+
!                                                          +=======================+ !
!                                                                                      !
```

LABEL : 190 "CONT.GRAN.CENTR"

```
!B14                          O0,10                                                    !
!                                                          +=======================+ !
+-] [--+------+------+------+-] [--+------+------+-+W3  +  1 -> W3          +-+
!                             !                            +=======================+ !
!                             !                                                        !
!                             !                                                        !
!                             !                                                        !
+                             +                                                        +
!                             !                                                        !
!                             !                                                        !
!                             !O0,11                                                   !
!                             !                            +=======================+ !
+                             +-] [--+------+------+-+W3  -  1 -> W3          +-+
!                                                          +=======================+ !
!                                                                                      !
```

LABEL : 200 "CONT.GRAN.SUPER"

```
!B16                          O1,0                                          !
!                                                  +=======================+ !
+-] [--+------+------+------+-] [--+------+------+-+W4  +  1 -> W4         +-+
!                             !                    +=======================+ !
!                             !                                              !
!                             !                                              !
!                             !                                              !
+                             +                                              +
!                             !                                              !
!                             !                                              !
!                             !O1,1                                          !
!                             !                    +=======================+ !
+                             +-] [--+------+------+-+W4  -  1 -> W4         +-+
!                                                  +=======================+ !
!                                                                            !
```

LABEL : 210 "VALORI LIMITE"

```
!                                                                   B23      !
! +========+                                                                 !
+-+W2 >= 70+--+------+------+------+------+------+------+------+---(    )----+
! +========+                                                                 !
!                                                                            !
!                                                                   B24      !
! +========+                                                                 !
+-+W2 <= 0 +--+------+------+------+------+------+------+------+---(    )----+
! +========+                                                                 !
!                                                                            !
!                                                                   B25      !
! +========+                                                                 !
+-+W3 >= 70+--+------+------+------+------+------+------+------+---(    )----+
! +========+                                                                 !
!                                                                            !
!                                                                   B26      !
! +========+                                                                 !
+-+W3 <= 0 +--+------+------+------+------+------+------+------+---(    )----+
! +========+                                                                 !
!                                                                            !
```

LABEL : 220 "VALORI LIMITE"

```
!                                                                   B29      !
! +========+                                                                 !
+-+W4 >= 70+--+------+------+------+------+------+------+------+---(    )----+
! +========+                                                                 !
!                                                                            !
!                                                                   B30      !
! +========+                                                                 !
+-+W4 <= 0 +--+------+------+------+------+------+------+------+---(    )----+
! +========+                                                                 !
!                                                                            !
```

LABEL : 230 "AUM.DIM.SAR.INF"

```
!I0,15  B20    B23    I0,0                                          O0,8       !
!                                                                               !
+-] [--+-] [--+-]/[--+-] [--+------+------+------+------+------+---(     )----+
!              !                                                                !
!              !                                                                !
!B31    B40    !                                                                !
!              !                                                                !
+-] [--+-]/[--+                                                                 +
!                                                                               !
!                                                                               !
!I0,16  B20    B24    I0,0                                          O0,9       !
!                                                                               !
+-] [--+-] [--+-]/[--+-] [--+------+------+------+------+------+---(     )----+
!              !                                                                !
!              !                                                                !
!B33    B40    !                                                                !
!              !                                                                !
+-] [--+-]/[--+                                                                 +
!                                                                               !
!                                                                               !
```

LABEL : 240 "AUM.DIM.SAR.CEN"

```
!I0,15  B21    B25    I0,0                                          O0,10      !
!                                                                               !
+-] [--+-] [--+-]/[--+-] [--+------+------+------+------+------+---(     )----+
!              !                                                                !
!              !                                                                !
!B34    B41    !                                                                !
!              !                                                                !
+-] [--+-]/[--+                                                                 +
!                                                                               !
!                                                                               !
!I0,16  B21    B26    I0,0                                          O0,11      !
!                                                                               !
+-] [--+-] [--+-]/[--+-] [--+------+------+------+------+------+---(     )----+
!              !                                                                !
!              !                                                                !
!B36    B41    !                                                                !
!              !                                                                !
+-] [--+-]/[--+                                                                 +
!                                                                               !
!                                                                               !
```

LABEL : 250 "AUM.DIM.SAR.SUP"

```
!I0,15  B22    B29    I0,0                                          O1,0        !
!                                                                                !
+-] [--+-] [--+-]/[--+-] [--+------+------+------+------+------+---(     )----+
!              !                                                                !
!              !                                                                !
!B37    B42    !                                                                !
!              !                                                                !
+-] [--+-]/[--+                                                                 +
!                                                                               !
!                                                                               !
!I0,16  B22    B30    I0,0                                          O1,1        !
!                                                                                !
+-] [--+-] [--+-]/[--+-] [--+------+------+------+------+------+---(     )----+
!              !                                                                !
!              !                                                                !
!B39    B42    !                                                                !
!              !                                                                !
+-] [--+-]/[--+                                                                 +
!                                                                               !
!                                                                               !
```

LABEL : 260 "SELEZ.PORT.LEN"

```
!I0,4                                                                           !
!                                                   +=======================+ !
+-]/[--+------+------+------+------+------+------+-+W5(W1) -> W40          +-+
!                                                 ! +=======================+ !
!                                                 !                           !
!                                                 !                           !
!                                                 ! +=======================+ !
+                                                 +-+W15(W1) -> W41         +-+
!                                                 ! +=======================+ !
!                                                 !                           !
!                                                 !                           !
!                                                 ! +=======================+ !
+                                                 +-+W25(W1) -> W42         +-+
!                                                   +=======================+ !
!                                                                               !
```

LABEL : 270 "SELEZ.PORT.VEL"

```
!I0,4                                                                           !
!                                                   +=======================+ !
+-] [--+------+------+------+------+------+------+-+W60(W1) -> W40          +-+
!                                                 ! +=======================+ !
!                                                 !                           !
!                                                 !                           !
!                                                 ! +=======================+ !
+                                                 +-+W75(W1) -> W41         +-+
!                                                 ! +=======================+ !
!                                                 !                           !
!                                                 !                           !
!                                                 ! +=======================+ !
+                                                 +-+W90(W1) -> W42         +-+
!                                                   +=======================+ !
!                                                                               !
```

```
 LABEL :  280              "<=> SARACIN.INF"

!  W2                                                                B31        !
! +========+                                                                    !
+-+   <    +--+------+------+------+------+------+------+------+---(    )----+
! +========+                                                                    !
!  W40                                                                          !
!  W2                                                                B32        !
! +========+                                                                    !
+-+   =    +--+------+------+------+------+------+------+------+---(    )----+
! +========+                                                                    !
!  W40                                                                          !
!  W2                                                                B33        !
! +========+                                                                    !
+-+   >    +--+------+------+------+------+------+------+------+---(    )----+
! +========+                                                                    !
!  W40                                                                          !
```

```
 LABEL :  290              "<=> SARACIN.CEN"

!  W3                                                                B34        !
! +========+                                                                    !
+-+   <    +--+------+------+------+------+------+------+------+---(    )----+
! +========+                                                                    !
!  W41                                                                          !
!  W3                                                                B35        !
! +========+                                                                    !
+-+   =    +--+------+------+------+------+------+------+------+---(    )----+
! +========+                                                                    !
!  W41                                                                          !
!  W3                                                                B36        !
! +========+                                                                    !
+-+   >    +--+------+------+------+------+------+------+------+---(    )----+
! +========+                                                                    !
!  W41                                                                          !
```

```
 LABEL :  300              "<=> SARACIN.SUP"

!  W4                                                                B37        !
! +========+                                                                    !
+-+   <    +--+------+------+------+------+------+------+------+---(    )----+
! +========+                                                                    !
!  W42                                                                          !
!  W4                                                                B38        !
! +========+                                                                    !
+-+   =    +--+------+------+------+------+------+------+------+---(    )----+
! +========+                                                                    !
!  W42                                                                          !
!  W4                                                                B39        !
! +========+                                                                    !
+-+   >    +--+------+------+------+------+------+------+------+---(    )----+
! +========+                                                                    !
!  W42                                                                          !
```

LABEL : 310 "MEM.VAL.PORT.VE"

```
!I0,4   I0,18                B20                                          !
!                                          +=======================+ !
+-]/[--+-] [--+------+------+-] [--+------+------+-+W2 -> W5(W1)          +-+
!                                          +=======================+ !
!                            !                                            !
!                            !                                            !
!                            !B21                                         !
!                                          +=======================+ !
+                            +-] [--+------+------+-+W3 -> W15(W1)         +-+
!                            !                                            !
!                            !                                            !
!                            !B22                                         !
!                                          +=======================+ !
+                            +-] [--+------+------+-+W4 -> W25(W1)         +-+
!                                          +=======================+ !
!                                                                         !
```

LABEL : 320 "MEM.VAL.PORT.LE"

```
!I0,4   I0,18                B20                                          !
!                                          +=======================+ !
+-] [--+-] [--+------+------+-] [--+------+------+-+W2 -> W60(W1)         +-+
!                                          +=======================+ !
!                            !                                            !
!                            !                                            !
!                            !B21                                         !
!                                          +=======================+ !
+                            +-] [--+------+------+-+W3 -> W75(W1)         +-+
!                            !                                            !
!                            !                                            !
!                            !B22                                         !
!                                          +=======================+ !
+                            +-] [--+------+------+-+W4 -> W90(W1)         +-+
!                                          +=======================+ !
!                                                                         !
```

LABEL : 330 "CONS.REG.MANUAL"

```
!I0,18  B27          B40                                        B40       !
!                                                                         !
+-]/[--+-]/[--+------+-] [--+------+------+------+------+------+---(    )----+
!                    !             !                                      !
!                    !             !                                      !
!                    !I0,15  B20   !                                      !
!                    !             !                                      !
+                    +-] [--+-] [--+                                      +
!                    !      !                                             !
!                    !      !                                             !
!                    !I0,16 !B21                                          !
!                    !      !                                             !
+                    +-] [--+-] [--+                                      +
!                    !             !                                      !
!                    !             !                                      !
!                    !B41          !                            B41       !
!                    !             !                                      !
+                    +-] [--+------+------+------+------+------+---(    )----+
!                                                                         !
!                                                                         !
```

LABEL : 340 "CONS.REG.MANUAL"

```
!I0,18  B27            I0,15  B22                                  B42        !
!                                                                             !
+-]/[--+-]/[--+------+-] [--+-] [--+------+------+------+------+---(     )----+
!                     !      !      !                                        !
!                     !      !      !                                        !
!                     !I0,16 !      !                                        !
!                     !      !      !                                        !
+                     +-] [--+      +                                        +
!                     !             !                                        !
!                     !             !                                        !
!                     !B42          !                                        !
!                     !             !                                        !
+                     +-] [--+------+                                        +
!                                                                             !
!                                                                             !
```

LABEL : 350 "VISUALIZZAZIONE"

```
!                                                                   SY14      !
!                                                                             !
+------+------+------+------+------+------+------+------+------+---(     )----+
!                                                                             !
!                                                                             !
```

LABEL : 360 "VISUALIZZAZIONE"

```
!B20                                                                          !
!                                                  +=======================+ !
+-] [--+------+------+------+------+------+------+-+W40 -> W50              +-+
!                                                  +=======================+ !
!                                                                             !
!B21                                                                          !
!                                                  +=======================+ !
+-] [--+------+------+------+------+------+------+-+W41 -> W50              +-+
!                                                  +=======================+ !
!                                                                             !
!B22                                                                          !
!                                                  +=======================+ !
+-] [--+------+------+------+------+------+------+-+W42 -> W50              +-+
!                                                  +=======================+ !
!                                                                             !
```

LABEL : 370 "VISUALIZZAZIONE"

```
!B43                                                                    !
!                                                  +=======================+ !
+-] [--+------+------+------+------+------+------+-+W50 AND H'00FF' -> W51 +-+
!                                                  +=======================+ !
!                                                                         !
!B43    B20                                                               !
!                                                  +=======================+ !
+-]/[--+-] [--+------+------+------+------+------+-+W2 AND H'00FF' -> W51  +-+
!      !                                           +=======================+ !
!      !                                                                  !
!      !B21                                                               !
!      !                                           +=======================+ !
+      +-] [--+------+------+------+------+------+-+W3 AND H'00FF' -> W51  +-+
!      !                                           +=======================+ !
!      !                                                                  !
!      !B22                                                               !
!      !                                           +=======================+ !
+      +-] [--+------+------+------+------+------+-+W4 AND H'00FF' -> W51  +-+
!                                                  +=======================+ !
!                                                                         !
```

LABEL : 380 "VIS.VAL.ISTANT."

```
!I0,15  I0,16                T 10                                B43        !
!                            +========+                                     !
+-]/[--+-]/[--+------+------+-+ E    D +--+------+------+------+---(    )----+
!                            ! !        !                                   !
!                            ! !        !                                   !
!                            ! !100ms=TB!                                   !
!                            ! !        !                                   !
+                            +-+ C    R +--+                                +
!                              !        !                                   !
!                              !        !                                   !
!                              !P =50   !                                   !
!                              !        !                                   !
+                              !        !                                   +
!                              +========+                                   !
!                                                                           !
```

LABEL : 390 "VISUALIZZAZIONE"

```
!                                                                           !
!                                                  +=======================+ !
+------+------+------+------+------+------+------+-+BCD W51 -> W51         +-+
!                                                ! +=======================+ !
!                                                !                           !
!                                                !                           !
!                                                ! +=======================+ !
+                                               +-+BCD W1 -> W52          +-+
!                                                ! +=======================+ !
!                                                !                           !
!                                                !                           !
!                                                ! +=======================+ !
+                                               +-+SLC8 W52 -> W52        +-+
!                                                ! +=======================+ !
!                                                !                           !
!                                                !                           !
!                                                ! +=======================+ !
+                                               +-+W51 OR  W52 -> W53     +-+
!                                                  +=======================+ !
!                                                                           !
```

LABEL : 395 "VISUALIZZAZIONE"

```
!                                                                          !
!                                                  +=======================+ !
+------+------+------+------+------+------+------+-+W53 -> SW16            +-+
!                                                  +=======================+ !
!                                                                          !
```

LABEL : 400 "RAZ X TARATURA"

```
!I0,24                                B20                                  !
!                                                  +=======================+ !
+-] [--+------+------+------+------+-] [--+------+-+0 -> W2                +-+
!                                     !            +=======================+ !
!                                     !                                     !
!                                     !B21                                  !
!                                     !            +=======================+ !
+                                     +-] [--+------+-+0 -> W3                +-+
!                                     !            +=======================+ !
!                                     !                                     !
!                                     !B22                                  !
!                                     !            +=======================+ !
+                                     +-] [--+------+-+0 -> W4                +-+
!                                                  +=======================+ !
!                                                                          !
```

LABEL : 410 "MEMORIA H>L VEL"

```
!B5                                                                B44     !
!                                                                          !
+-] [--+------+------+------+------+------+------+------+------+---( S  )----+
!                                                                          !
!                                                                          !
!B32    B35    B38                                                  B44    !
!                                                                          !
+-] [--+-] [--+-] [--+------+------+------+------+------+------+---( R  )----+
!                    !                                                     !
!                    !                                                     !
!B3                  !                                                     !
!                    !                                                     !
+-] [--+------+------+                                                     +
!                                                                          !
!                                                                          !
```

LABEL : 395 "VISUALIZZAZIONE"

```
!                                                                  !
!                                                 +=================+ !
+------+------+------+------+------+------+------+-+W53 -> SW16     +-+
!                                                 +=================+ !
!                                                                  !
```

LABEL : 400 "RAZ X TARATURA"

```
!I0,24                                B20                          !
!                                                 +=================+ !
+-] [--+------+------+------+------+-] [--+------+-+0 -> W2        +-+
!                                     !           +=================+ !
!                                     !                              !
!                                     !B21                           !
!                                     !           +=================+ !
+                                     +-] [--+------+-+0 -> W3      +-+
!                                     !           +=================+ !
!                                     !                              !
!                                     !B22                           !
!                                     !           +=================+ !
+                                     +-] [--+------+-+0 -> W4      +-+
!                                                 +=================+ !
!                                                                  !
```

LABEL : 410 "MEMORIA H>L VEL"

```
!B5                                                          B44   !
!                                                                  !
+-] [--+------+------+------+------+------+------+------+---( S  )----+
!                                                                  !
!                                                                  !
!B32    B35    B38                                           B44   !
!                                                                  !
+-] [--+-] [--+-] [--+------+------+------+------+------+------+---( R  )----+
!                   !                                              !
!                   !                                              !
!B3                 !                                              !
!                   !                                              !
+-] [--+------+------+                                             +
!                                                                  !
!                                                                  !
```