RICO - Tomás Castro Silva, Lda.

Shears - Press Brakes

Portugal
4515-118 Gondomar
Rua de Cerquido, Zebreiros
Phone. +351224540370
Fax +351224541424
e-mail geral@rico.pt

Customer	
Street	
ZIP code / City	
Phone	
Fax	
e-mail	

end customer	
Street	
ZIP code / City	
Phone	
Fax	
e-mail	

Project name	PRCx 6x FPSC 2014V6.0.2_Pedestal
Project description	PRCB 30100 SN2390 DA-66T X, R, AKAS II-M, RICO CROWNING
Commission	RICO
Responsible for project	Marcílio Silva
Created on	2014
Project end	
Edit date	15-06-2016
by (short name)	marcilio.silva
Number of pages	112

Place of installation	
Manufacturer (company)	Tomás Castro Silva, Lda.
Make	
Part feature	
Input wiring	E+3PH 4G4mm²
Power supply	400 V AC 50 Hz
Control voltage	24 V
Rated current	15 A
Regulations	Directive 2006/42/CE;EN 12622:2009 2006/95/CE;2006/42/CE;2009/125/CE
Enclosures	
Degree of protection	IP 66 ; IK 10

Specifications resume

Directive: EU

General information: PRCx 6x FPSC 2014V6.0.2_Pedestal
This electrical schematic is provided with the referenced machine as the appropriated documentation, it shall not be reproduced or distributed without RICO consent.

Specific regulations	Documentation regulations	Technical drawing regulations
Directive 2006/42/CE	IEC 60364	EN 60204
European standard EN 12622:2009	EN 61355	EN 60529
Directive 2006/95/CE	DIN EN 60617	EN 61557
Directive 2009/125/CE	DIN EN 61082	IEC 60364
European standard EN 12622		

Safety systems:
FIESSLER FPSC (CAT IV)
FIESSLER AKAS-3 (CAT IV)
PILZ PSEN (CAT IV)

Machine options

Y1 + Y2	☐	SPA	☐
X Axis	☐	ACF1	☐
R Axis	☐	CROWNING	☐
X5 Axis	☐	CLAMPING	☐
Z1 + Z2 Axis	☐		

Note

This schematic is presented with all the machine options, so as all listings and documentation group all the components required for all options.

Note:

Table of contents

Column X: An automatically generated page was edited

F06_001

Page	Page description	supplementary page field	Date	Edited by	X
/1	Cover page		03-03-2016	marcilio.silva	
/2	General information		03-03-2016	marcilio.silva	X
/3	Table of contents : /1 - =EDM+MCBN/15		15-06-2016	marcilio.silva	
/3.1	Table of contents : =EDM+MCBN/16 - =EDM+MCBN/45		29-04-2016	marcilio.silva	
/3.2	Table of contents : =EDM+MCBN/46 - =REPORT/28		15-06-2016	marcilio.silva	
/3.3	Table of contents : =REPORT/29 - =REPORT/41		15-06-2016	marcilio.silva	
=TDM1+EPC1/1	PRCN Structure indentifier layout		03-03-2016	marcilio.silva	
=TDM1+EPC1/2	Cabinet layout Note:Layout may differ according to the optionals		03-03-2016	marcilio.silva	
=TDM1+EPC1/3	Pedal 1 layout		03-03-2016	marcilio.silva	
=TDM1+EPC1/3a	Pedal 1 layout		03-03-2016	marcilio.silva	
=TDM1+EPC1/4	Pedal 2 layout		03-03-2016	marcilio.silva	
=TDM1+EPC1/5	Pedestal socket layout		03-03-2016	marcilio.silva	
=TDM1+EPC1/6	Terminal Blocks structure identifier layout		03-03-2016	marcilio.silva	
=TDM1+EPC1/7	Structure identifier overview		03-03-2016	marcilio.silva	
=EDM+MCBN/1	Power supply		15-06-2016	marcilio.silva	
=EDM+MCBN/1a	Power supply		15-06-2016	marcilio.silva	
=EDM+MCBN/2	Power supply		18-03-2016	marcilio.silva	
=EDM+MCBN/2a	Power supply		03-03-2016	marcilio.silva	
=EDM+MCBN/3	Drives 1		18-03-2016	marcilio.silva	
=EDM+MCBN/4	Drives 2		18-03-2016	marcilio.silva	
=EDM+MCBN/5	Drives 3		18-03-2016	marcilio.silva	
=EDM+MCBN/6	Pedal light connections		18-03-2016	marcilio.silva	
=EDM+MCBN/7	24VAC Control		18-03-2016	marcilio.silva	
=EDM+MCBN/7a	24VAC Control		10-05-2016	marcilio.silva	
=EDM+MCBN/7b	24VAC Control		21-03-2016	marcilio.silva	
=EDM+MCBN/8	24VAC Control		18-03-2016	marcilio.silva	
=EDM+MCBN/9	24VDC		18-03-2016	marcilio.silva	
=EDM+MCBN/10	24VDC		18-03-2016	marcilio.silva	
=EDM+MCBN/11	DNC Modules		23-03-2016	marcilio.silva	
=EDM+MCBN/12	DNC Modules		18-03-2016	marcilio.silva	
=EDM+MCBN/13	FPSC-B-C-S		18-03-2016	marcilio.silva	
=EDM+MCBN/14	Hydraulic pump start/stop		15-06-2016	marcilio.silva	
=EDM+MCBN/15	Hydraulic proportinal valves control		18-03-2016	marcilio.silva	

Table of contents

Column X: An automatically generated page was edited

F06_001

Page	Page description	supplementary page field	Date	Edited by	X
=EDM+MCBN/16	Module AD1 I/O X1		21-03-2016	marcilio.silva	
=EDM+MCBN/17	Module AD1 I/O X2		21-03-2016	marcilio.silva	
=EDM+MCBN/18	Module AD1 I/O X3		21-03-2016	marcilio.silva	
=EDM+MCBN/19	Module AD2 I/O X1		21-03-2016	marcilio.silva	
=EDM+MCBN/20	Module AD2 I/O X3		21-03-2016	marcilio.silva	
=EDM+MCBN/21	Module AD3 I/O X1		21-03-2016	marcilio.silva	
=EDM+MCBN/22	Module AD3 I/O X3		21-03-2016	marcilio.silva	
=EDM+MCBN/23	Module AD4 I/O X1		21-03-2016	marcilio.silva	
=EDM+MCBN/24	Module AD4 I/O X2		21-03-2016	marcilio.silva	
=EDM+MCBN/25	Module AD1 Analog B		03-03-2016	marcilio.silva	
=EDM+MCBN/26	Module AD1 Analog A		21-03-2016	marcilio.silva	
=EDM+MCBN/27	Module AD2 Analog A		21-03-2016	marcilio.silva	
=EDM+MCBN/28	Module AD3 Analog A		21-03-2016	marcilio.silva	
=EDM+MCBN/29	Module AD4 Analog A		21-03-2016	marcilio.silva	
=EDM+MCBN/30	FPSC-E03		21-03-2016	marcilio.silva	
=EDM+MCBN/31	FPSC-E04		21-03-2016	marcilio.silva	
=EDM+MCBN/31a	FPSC-E04		21-03-2016	marcilio.silva	
=EDM+MCBN/32	FPSC-E05		21-03-2016	marcilio.silva	
=EDM+MCBN/33	FPSC-E06		21-03-2016	marcilio.silva	
=EDM+MCBN/34	FPSC-E07		21-03-2016	marcilio.silva	
=EDM+MCBN/35	FPSC-A00		21-03-2016	marcilio.silva	
=EDM+MCBN/36	FPSC-A01		21-03-2016	marcilio.silva	
=EDM+MCBN/37	FPSC-A02		21-03-2016	marcilio.silva	
=EDM+MCBN/38	FPSC-AKAS 2 M		21-03-2016	marcilio.silva	
=EDM+MCBN/38a	FPSC-AKAS 3 M		29-04-2016	marcilio.silva	
=EDM+MCBN/38b	FPSC-AKAS 3 P		29-04-2016	marcilio.silva	
=EDM+MCBN/39	SAFETY LIGHT BARRIER		21-03-2016	marcilio.silva	
=EDM+MCBN/40	FPSC-ENCODERS		03-03-2016	marcilio.silva	
=EDM+MCBN/41	XX-AXIS CN1-DA103VA		21-03-2016	marcilio.silva	
=EDM+MCBN/42	RR-AXIS CN1-DA102		21-03-2016	marcilio.silva	
=EDM+MCBN/43	X5-AXIS CN1-DA102		21-03-2016	marcilio.silva	
=EDM+MCBN/44	Z1-AXIS CN1-DA102		21-03-2016	marcilio.silva	
=EDM+MCBN/45	Z2-AXIS CN1-DA102		21-03-2016	marcilio.silva	

Table of contents

Column X: An automatically generated page was edited

F06_001

Page	Page description	supplementary page field	Date	Edited by	X
=EDM+MCBN/46	DEC1 CN1-DA102		21-03-2016	marcilio.silva	
=EDM+MCBN/47	DEC1 CN5-DA102		03-03-2016	marcilio.silva	
=EDM+MCBN/48	DEC2 CN1-DA102		21-03-2016	marcilio.silva	
=EDM+MCBN/49	DEC2 CN5-DA102		03-03-2016	marcilio.silva	
=REPORT/1	Fuse list		15-06-2016	marcilio.silva	
=REPORT/2	Summarized parts list : WAGO.2002-2211/1000-0410 - PZZ.MKV11D15		15-06-2016	marcilio.silva	
=REPORT/2.1	Summarized parts list : 400V-230V(920VA)+24V(100VA) - PSEN OP4H-S-30-090/1		15-06-2016	marcilio.silva	
=REPORT/3	Cable diagram =EDM+MCBN-2AW1 =EDM+MCBN-W1 =EDM+MCBN-1W0 =EDM+MCBN-1W5		15-06-2016	marcilio.silva	
=REPORT/4	Cable diagram =EDM+MCBN-1W5 =EDM+MCBN-2W4 =EDM+MCBN-2W5		15-06-2016	marcilio.silva	
=REPORT/5	Cable diagram =EDM+MCBN-2W8 =EDM+MCBN-3W0 =EDM+MCBN-3W2 =EDM+MCBN-3W3		15-06-2016	marcilio.silva	
=REPORT/6	Cable diagram =EDM+MCBN-3W5 =EDM+MCBN-3W6 =EDM+MCBN-3W8 =EDM+MCBN-4W0 =EDM+MCBN-4W2		15-06-2016	marcilio.silva	
=REPORT/7	Cable diagram =EDM+MCBN-4W3 =EDM+MCBN-4W5 =EDM+MCBN-5W1		15-06-2016	marcilio.silva	
=REPORT/8	Cable diagram =EDM+MCBN-5W3 =EDM+MCBN-5W5		15-06-2016	marcilio.silva	
=REPORT/9	Cable diagram =EDM+MCBN-5W5 =EDM+MCBN-5W7		15-06-2016	marcilio.silva	
=REPORT/10	Cable diagram =EDM+MCBN-5W7 =EDM+MCBN-7W1		15-06-2016	marcilio.silva	
=REPORT/11	Cable diagram =EDM+MCBN-9W2 =EDM+MCBN-9W3 =EDM+MCBN-9W5		15-06-2016	marcilio.silva	
=REPORT/12	Cable diagram =EDM+MCBN-9W5 =EDM+MCBN-10W0 =EDM+MCBN-10W1 =EDM+MCBN-10W4		15-06-2016	marcilio.silva	
=REPORT/13	Cable diagram =EDM+MCBN-10W5 =EDM+MCBN-10W6 =EDM+MCBN-11W0		15-06-2016	marcilio.silva	
=REPORT/14	Cable diagram =EDM+MCBN-11W1 =EDM+MCBN-11W2 =EDM+MCBN-11W3 =EDM+MCBN-11W4		15-06-2016	marcilio.silva	
=REPORT/15	Cable diagram =EDM+MCBN-11W4 =EDM+MCBN-11W5 =EDM+MCBN-11W6 =EDM+MCBN-11W8 =EDM+MCBN-12W1		15-06-2016	marcilio.silva	
=REPORT/16	Cable diagram =EDM+MCBN-13W4 =EDM+MCBN-15W1		15-06-2016	marcilio.silva	
=REPORT/17	Cable diagram =EDM+MCBN-15W1 =EDM+MCBN-15W2		15-06-2016	marcilio.silva	
=REPORT/18	Cable diagram =EDM+MCBN-15W3 =EDM+MCBN-15W4 =EDM+MCBN-15W6		15-06-2016	marcilio.silva	
=REPORT/19	Cable diagram =EDM+MCBN-15W7 =EDM+MCBN-16W2 =EDM+MCBN-17W2		15-06-2016	marcilio.silva	
=REPORT/20	Cable diagram =EDM+MCBN-17W2 =EDM+MCBN-18W2 =EDM+MCBN-19W2		15-06-2016	marcilio.silva	
=REPORT/21	Cable diagram =EDM+MCBN-19W3 =EDM+MCBN-19W4 =EDM+MCBN-20W2 =EDM+MCBN-21W2		15-06-2016	marcilio.silva	
=REPORT/22	Cable diagram =EDM+MCBN-21W2 =EDM+MCBN-22W2 =EDM+MCBN-23W2		15-06-2016	marcilio.silva	
=REPORT/23	Cable diagram =EDM+MCBN-24W2 =EDM+MCBN-25W1 =EDM+MCBN-25W6		15-06-2016	marcilio.silva	
=REPORT/24	Cable diagram =EDM+MCBN-26W0 =EDM+MCBN-27W0		15-06-2016	marcilio.silva	
=REPORT/25	Cable diagram =EDM+MCBN-27W5 =EDM+MCBN-28W0 =EDM+MCBN-29W0		15-06-2016	marcilio.silva	
=REPORT/26	Cable diagram =EDM+MCBN-29W5 =EDM+MCBN-30W7 =EDM+MCBN-32W0		15-06-2016	marcilio.silva	
=REPORT/27	Cable diagram =EDM+MCBN-32W2 =EDM+MCBN-32W3 =EDM+MCBN-35W0		15-06-2016	marcilio.silva	
=REPORT/28	Cable diagram =EDM+MCBN-35W2 =EDM+MCBN-35W3 =EDM+MCBN-38W1		15-06-2016	marcilio.silva	

Table of contents

Column X: An automatically generated page was edited

F06_001

Page	Page description	supplementary page field	Date	Edited by	X
=REPORT/29	Cable diagram =EDM+MCBN-38W1 =EDM+MCBN-38W3		15-06-2016	marcilio.silva	
=REPORT/30	Cable diagram =EDM+MCBN-38W3		15-06-2016	marcilio.silva	
=REPORT/31	Cable diagram =EDM+MCBN-38W3 =EDM+MCBN-39W2		15-06-2016	marcilio.silva	
=REPORT/32	Cable diagram =EDM+MCBN-39W7 =EDM+MCBN-41W1 =EDM+MCBN-41W3		15-06-2016	marcilio.silva	
=REPORT/33	Cable diagram =EDM+MCBN-41W3.1 =EDM+MCBN-41W6 =EDM+MCBN-42W1		15-06-2016	marcilio.silva	
=REPORT/34	Cable diagram =EDM+MCBN-42W3 =EDM+MCBN-42W3.1 =EDM+MCBN-42W6 =EDM+MCBN-43W0		15-06-2016	marcilio.silva	
=REPORT/35	Cable diagram =EDM+MCBN-43W0 =EDM+MCBN-43W3 =EDM+MCBN-43W6		15-06-2016	marcilio.silva	
=REPORT/36	Cable diagram =EDM+MCBN-44W0 =EDM+MCBN-44W3 =EDM+MCBN-44W6		15-06-2016	marcilio.silva	
=REPORT/37	Cable diagram =EDM+MCBN-45W0 =EDM+MCBN-45W3 =EDM+MCBN-45W6		15-06-2016	marcilio.silva	
=REPORT/38	Cable diagram =EDM+MCBN-46W2 =EDM+MCBN-47W4 =EDM+MCBN-48W2 =EDM+MCBN-49W4		15-06-2016	marcilio.silva	
=REPORT/39	Cable diagram =EDM+MCBN-49W4 =EDM+LED-2AW2		15-06-2016	marcilio.silva	
=REPORT/40	Terminal-strip overview : =EDM+MCBN-1X0 - =EDM+MCBN-44X0		15-06-2016	marcilio.silva	
=REPORT/41	Terminal-strip overview : =EDM+MCBN-45X1 - =EDM+MCBN-46X2		15-06-2016	marcilio.silva	

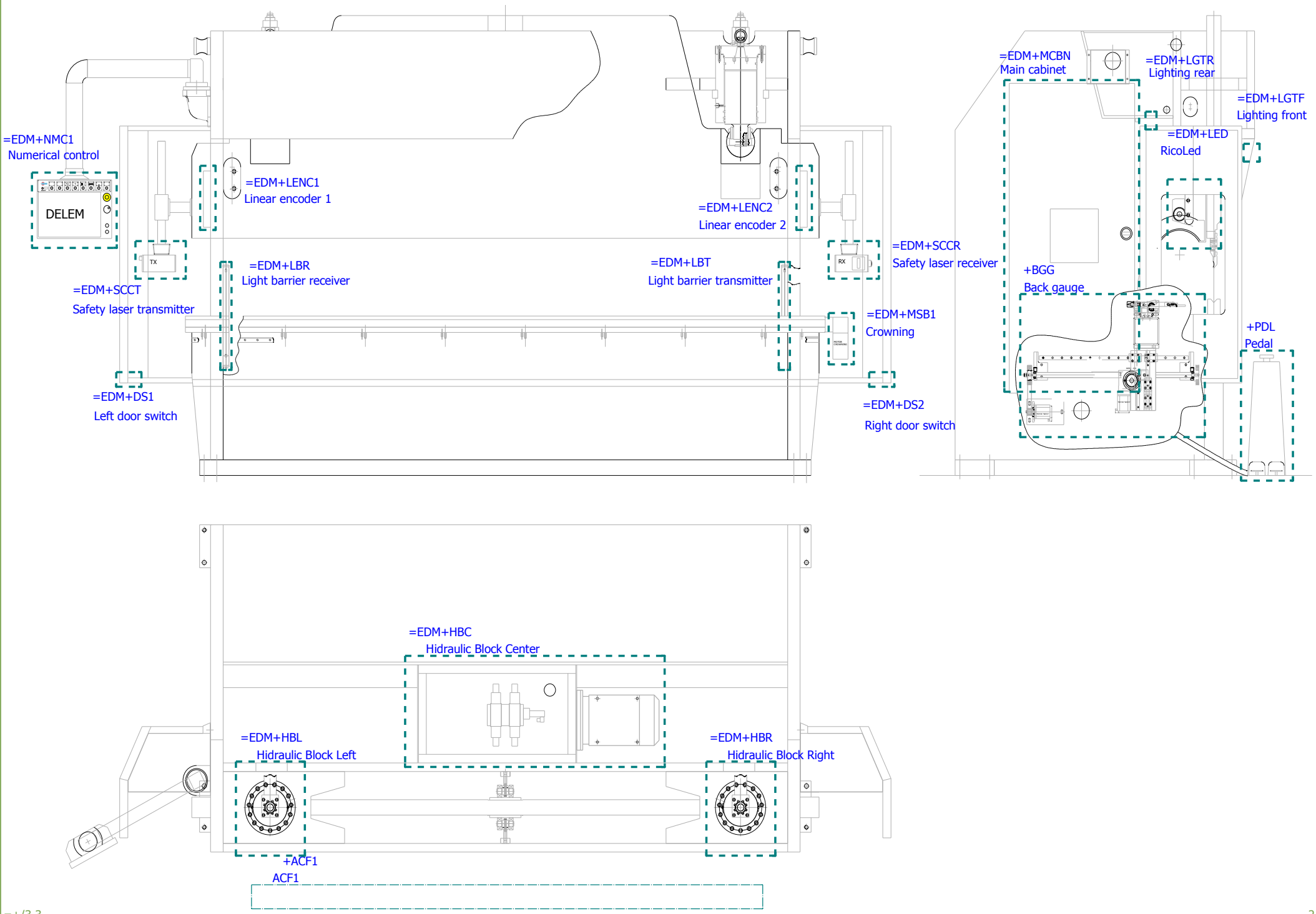

=+/3.3

2

RICO Precision Ideas				Date	03-03-2016	RICO	PRCN Structure indentifier layout	= TDM1
				Ed.	marcilio.silva			+ EPC1
				Appr		PRCB 30100 SN2390 DA-66T		Page 1
	Modification	Date	Name	Original		X, R, AKAS II-M, RICO CROWNING		Total pages112

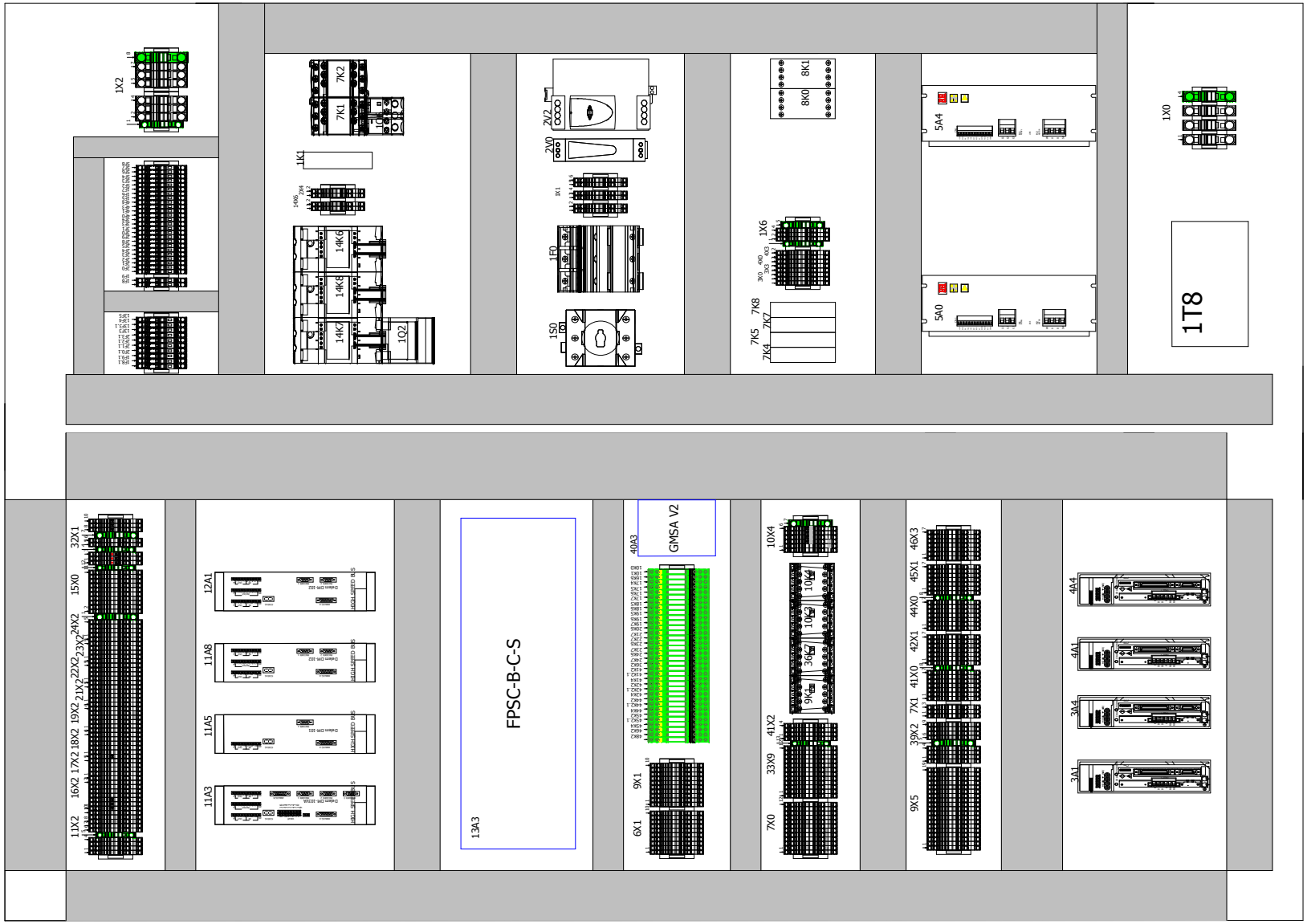

1 2a

C:\6_Eléctrico\6_1_Esquemas Eléctricos\6_1_2_ESQUEMAS ELECTRICOS 2012\PRCx 6x FPSC 2014V6.0.edb\Images\image002.jpg	Date	26-11-2015	RICO	Cabinet layout		= TDM1	
	Ed.	marcilio.silva		Note:Layout may differ according to the optionals		+ EPC1	
	Appr		PRCN 30200 SN2341 DA-66T			Page	2
Modification / Date / Name	Original		X, R, AKAS II-M FPSC			Total pages	110

1 3

Date	03-03-2016	RICO	Cabinet layout		= TDM1	
Ed.	marcilio.silva		Note:Layout may differ according to the optionals		+ EPC1	
Appr		PRCB 30100 SN2390 DA-66T			Page	2
Modification / Date / Name / Original		X, R, AKAS II-M, RICO CROWNING			Total pages	112

RICO Precision Ideas

PEDAL LAYOUT

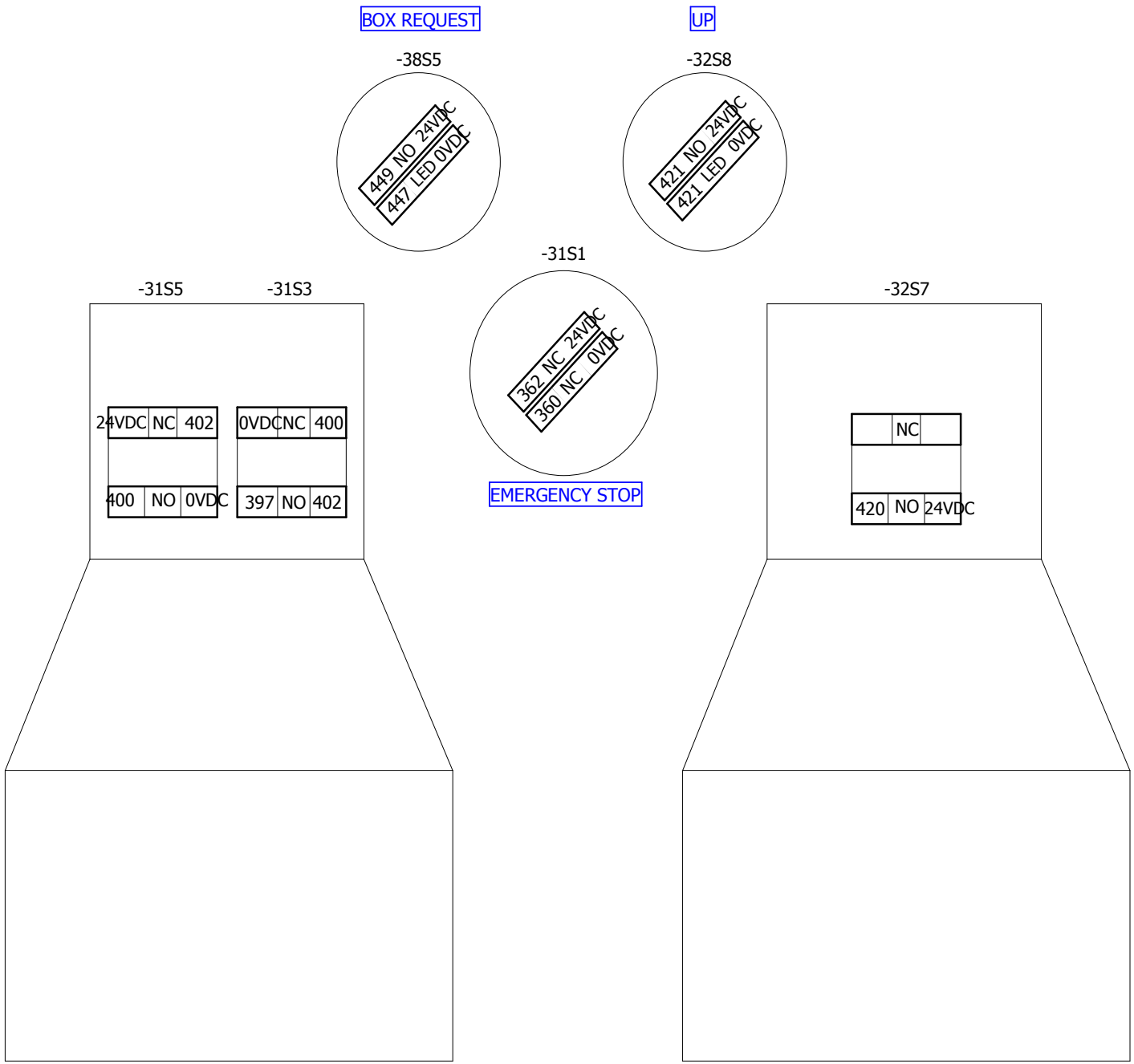

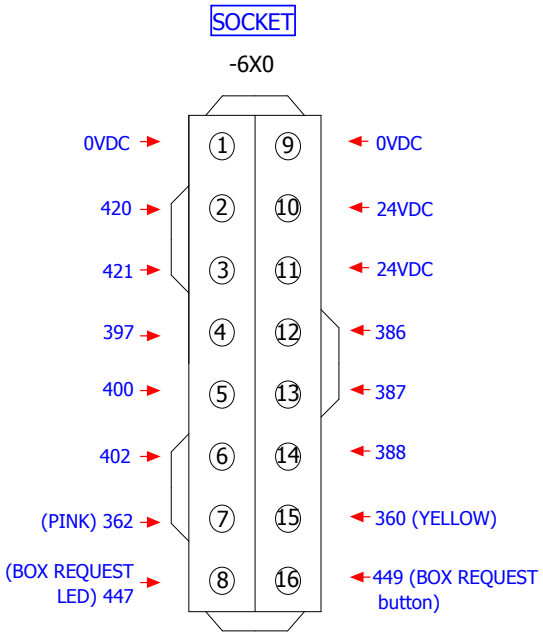

LED Strip

386	RED
387	GREEN
388	BLUE
24VDC	WHITE

2 3a

RICO Precision Ideas				Date	03-03-2016	RICO	Pedal 1 layout	= TDM1
				Ed.	marcilio.silva			+ EPC1
				Appr		PRCB 30100 SN2390 DA-66T		Page 3
	Modification	Date	Name	Original		X, R, AKAS II-M, RICO CROWNING		Total pages112

PEDAL LAYOUT

TOP VIEW

NOTE: ONLY VALID WHEN THE MACHINE HAS TWO PEDALS!

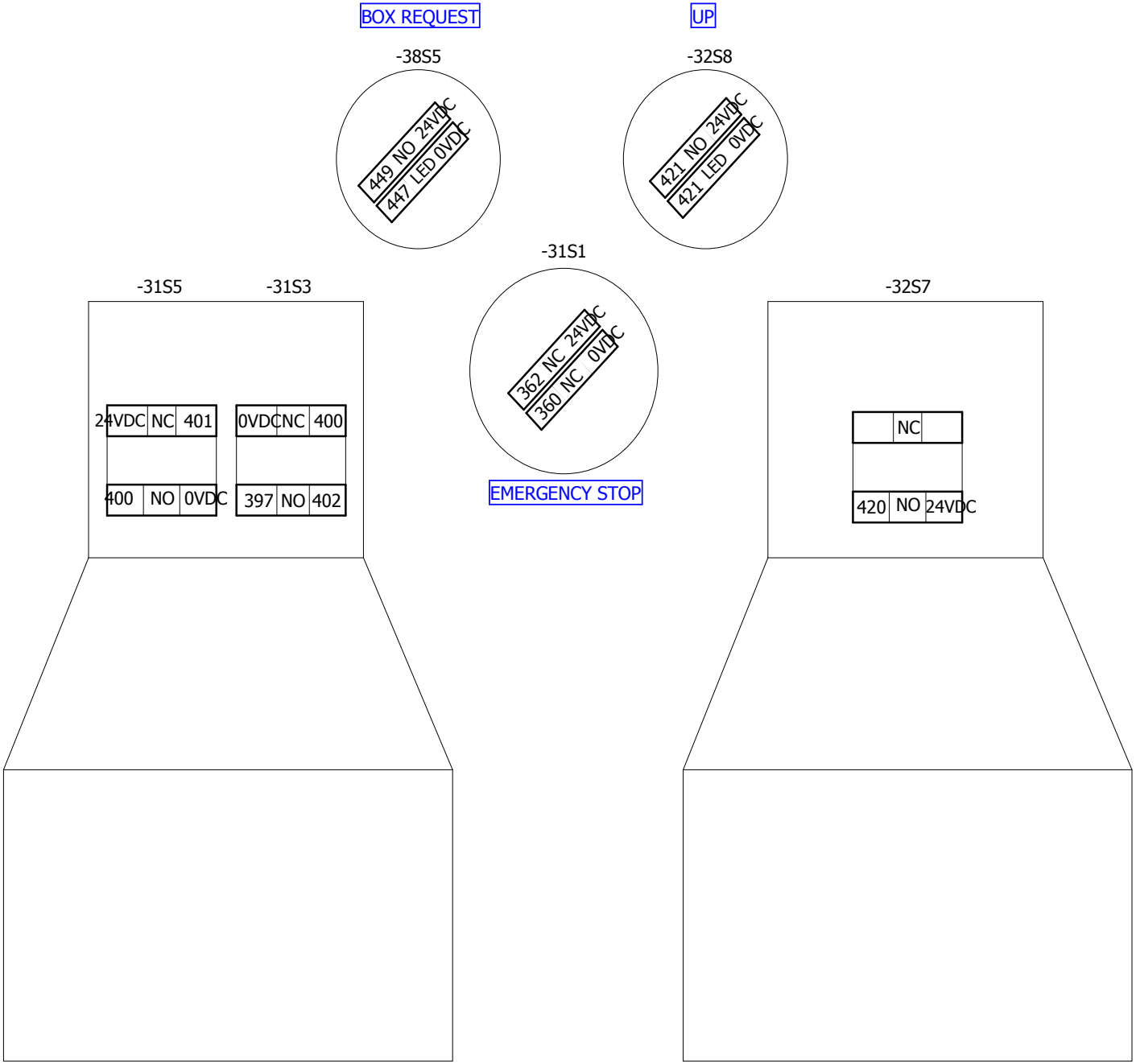

SOCKET

-6X0

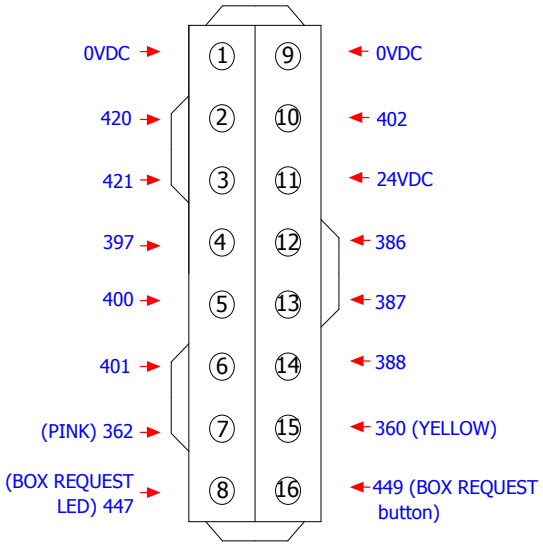

LED Strip

386	RED
387	GREEN
388	BLUE
24VDC	WHITE

SECOND OPERATOR FOOT-PEDAL LAYOUT

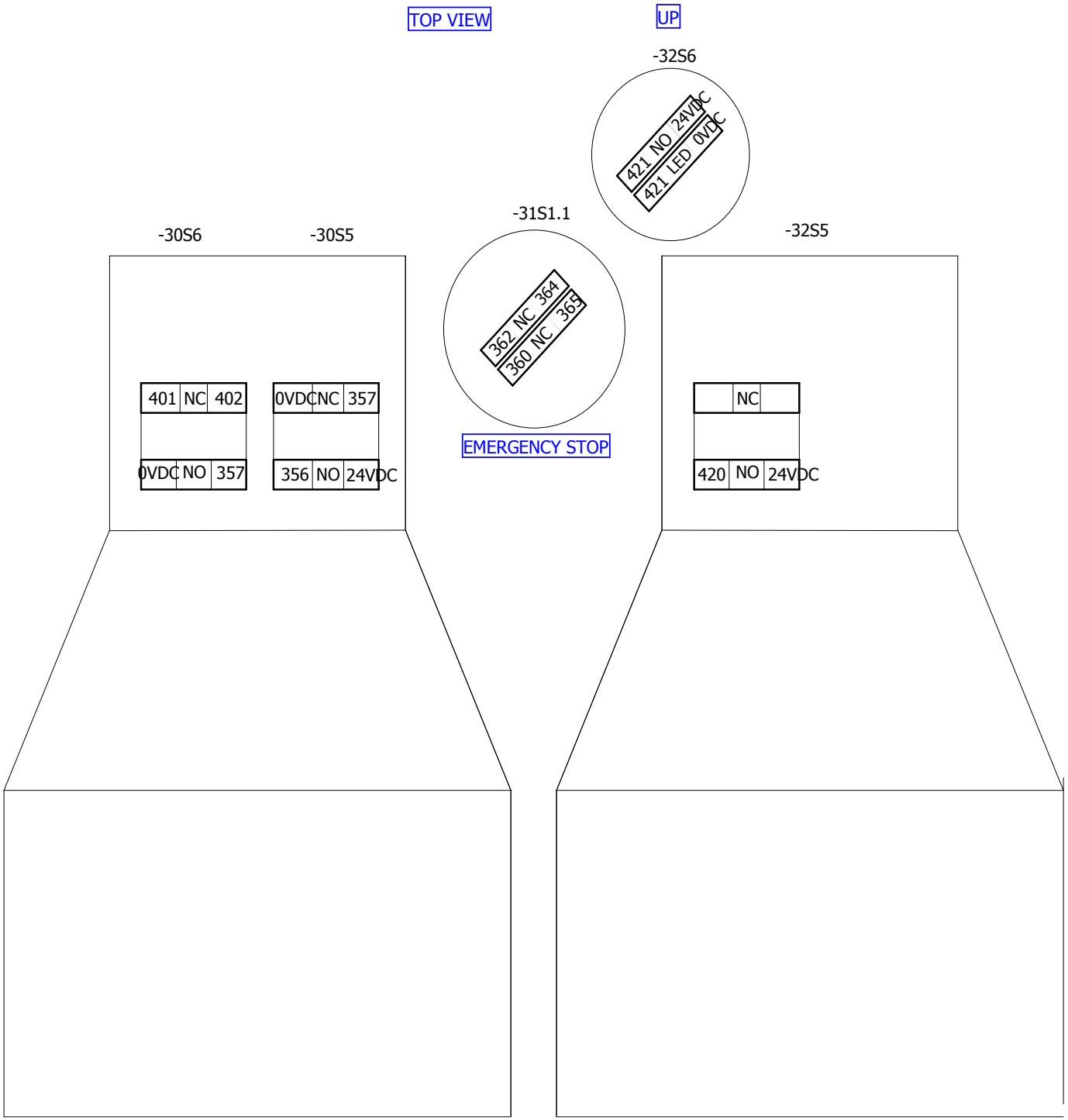

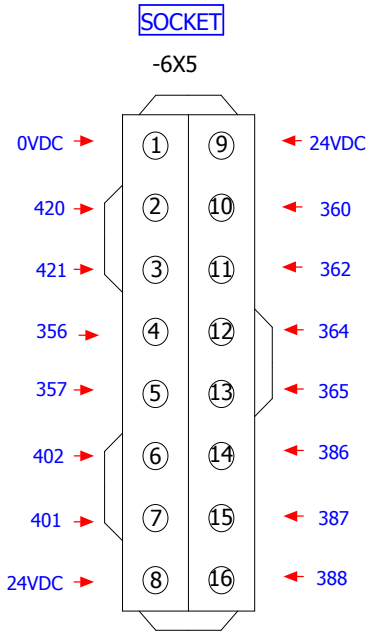

LED Strip

386 → RED
387 → GREEN
388 → BLUE
24VDC → WHITE

3a

5

RICO Precision Ideas			Date	03-03-2016	RICO	Pedal 2 layout	= TDM1
			Ed.	marcilio.silva			+ EPC1
			Appr		PRCB 30100 SN2390 DA-66T		Page 4
Modification	Date	Name	Original		X, R, AKAS II-M, RICO CROWNING		Total pages112

A		B		C		D		E	
1-RD	-9W5	1-BU	-11W2	1-RD	-13W4	1-WH/OG	-11W1	1-WH/OG	-11W0
2-BU		2-PK		2-BU		2-OG		2-OG	
3-PK		3-GY		3-PK		3-WH/GN		3-WH/GN	
4-WH/PK		4-YE		4-GY		4-BU		4-BU	
5-GY		5-GN		5-YE		5-WH/BU		5-WH/BU	
6-YE		6-BN		6-GN		6-GN		6-GN	
7-GN		7-WH		7-BN		7-WH/BN		7-WH/BN	
8-BN		8-BK		8-WH		8-BN		8-BN	
9-WH		9-		9-BK					
10-GN/WH		10-							
11-RD/BU		11-							
12-GY/PK		12-							
13-VT		13-							
14-BK		14-							
15-BN/GN		15-GY/WH	-9W5						
16-BN/PK		16-BN/YE							
17-BN/GY		17-YE/WH							

-9X6

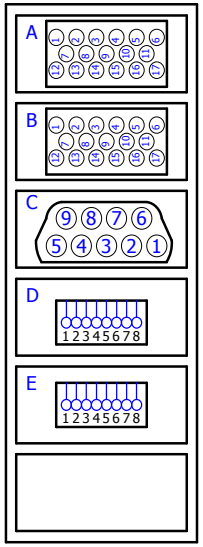

Pedestal Side

A		B		C		D		E	
1-RD	-9W5	1-BU	-11W2	1-RD	-13W4	1-WH/OG	-11W1	1-WH/OG	-11W0
2-BU		2-PK		2-BU		2-OG		2-OG	
3-PK		3-GY		3-PK		3-WH/GN		3-WH/GN	
4-WH/PK		4-YE		4-GY		4-BU		4-BU	
5-GY		5-GN		5-YE		5-WH/BU		5-WH/BU	
6-YE		6-BN		6-GN		6-GN		6-GN	
7-GN		7-WH		7-BN		7-WH/BN		7-WH/BN	
8-BN		8-BK		8-WH		8-BN		8-BN	
9-WH		9-		9-BK					
10-GN/WH		10-							
11-RD/BU		11-							
12-GY/PK		12-							
13-VT		13-							
14-BK		14-							
15-BN/GN		15-GY/WH	-9W5						
16-BN/PK		16-BN/YE							
17-BN/GY		17-YE/WH							

-9X6

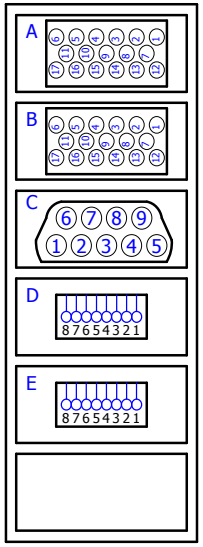

Cabinet Side

Double-deck terminal block

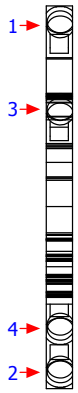

Simple terminal block

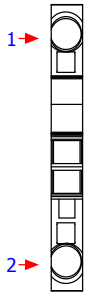

Example 1

-7X2
terminal block 3

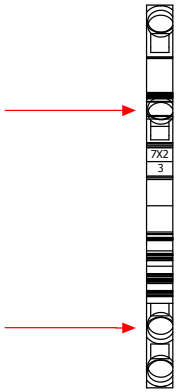

Example 2

-5X5
terminal block 1

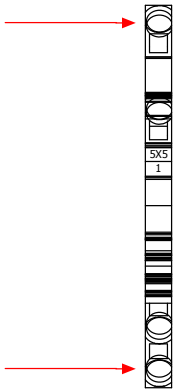

Example 3

-1X2
terminal block 4

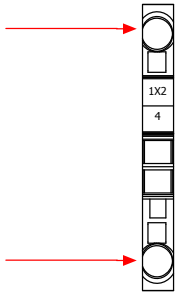

schematic

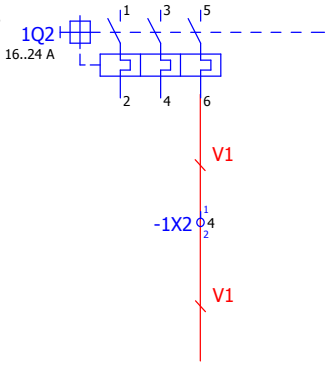

schematic

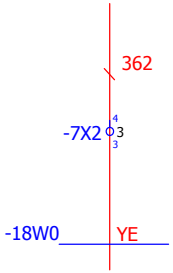

schematic

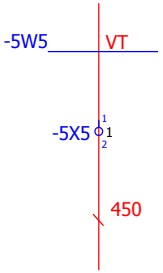

RICO Precision Ideas				Date	03-03-2016	RICO	Terminal Blocks structure identifier layout	= TDM1
				Ed.	marcilio.silva			+ EPC1
				Appr		PRCB 30100 SN2390 DA-66T		
	Modification	Date	Name	Original		X, R, AKAS II-M, RICO CROWNING		Page 6 / Total pages112

Structure identifier overview

F24_001

Full designation	Structure description	Full designation	Structure description
+ACF1	ACF1		
+<Identificação vazia>			
+<Identificação vazia>.LED			
+MSB1	Crowning		
+PART_STKL			
+DS2	Right door switch		
+DS1	Left door switch		
+BGG	Back gauge		
+LGTF	Lighting front		
+PDL2	Pedal 2		
+PDL	Pedal		
+MCBN	Main cabinet		
+NMC1	Numerical control		
+HB	Hydraulic block		
+SCCR	Safety laser receiver		
+SCCT	Safety laser transmitter		
+LGTR	Lighting rear		
+EPC1			
+LENC1	Linear encoder 1		
+LENC2	Linear encoder 2		
+LBR	Light barrier receiver		
+LBT	Light barrier transmitter		
+TERMINAL_DIAG			
+LED	RicoLed		
+HBL	Hidraulic Block Left		
+HBC	Hidraulic Block Center		
+HBR	Hidraulic Block Right		
+ACFL			
+ACFR			
+ACF			

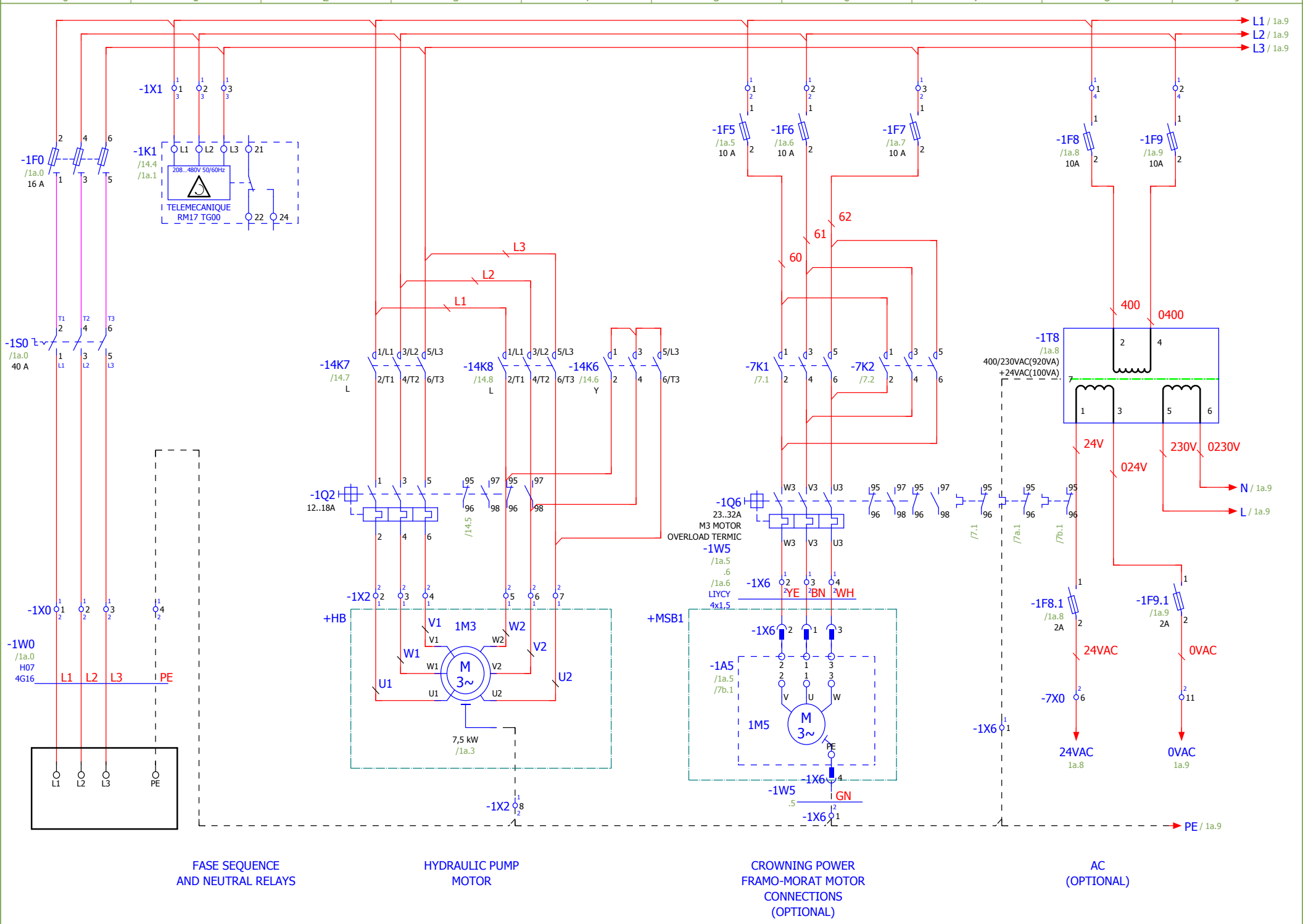

=TDM1+EPC1/7

1a

RICO Precision Ideas			Date	15-06-2016	RICO	Power supply	= EDM
			Ed.	marcilio.silva			+ MCBN
			Appr		PRCB 30100 SN2390 DA-66T		Page 1
Modification	Date	Name	Original		X, R, AKAS II-M, RICO CROWNING		Total pages112

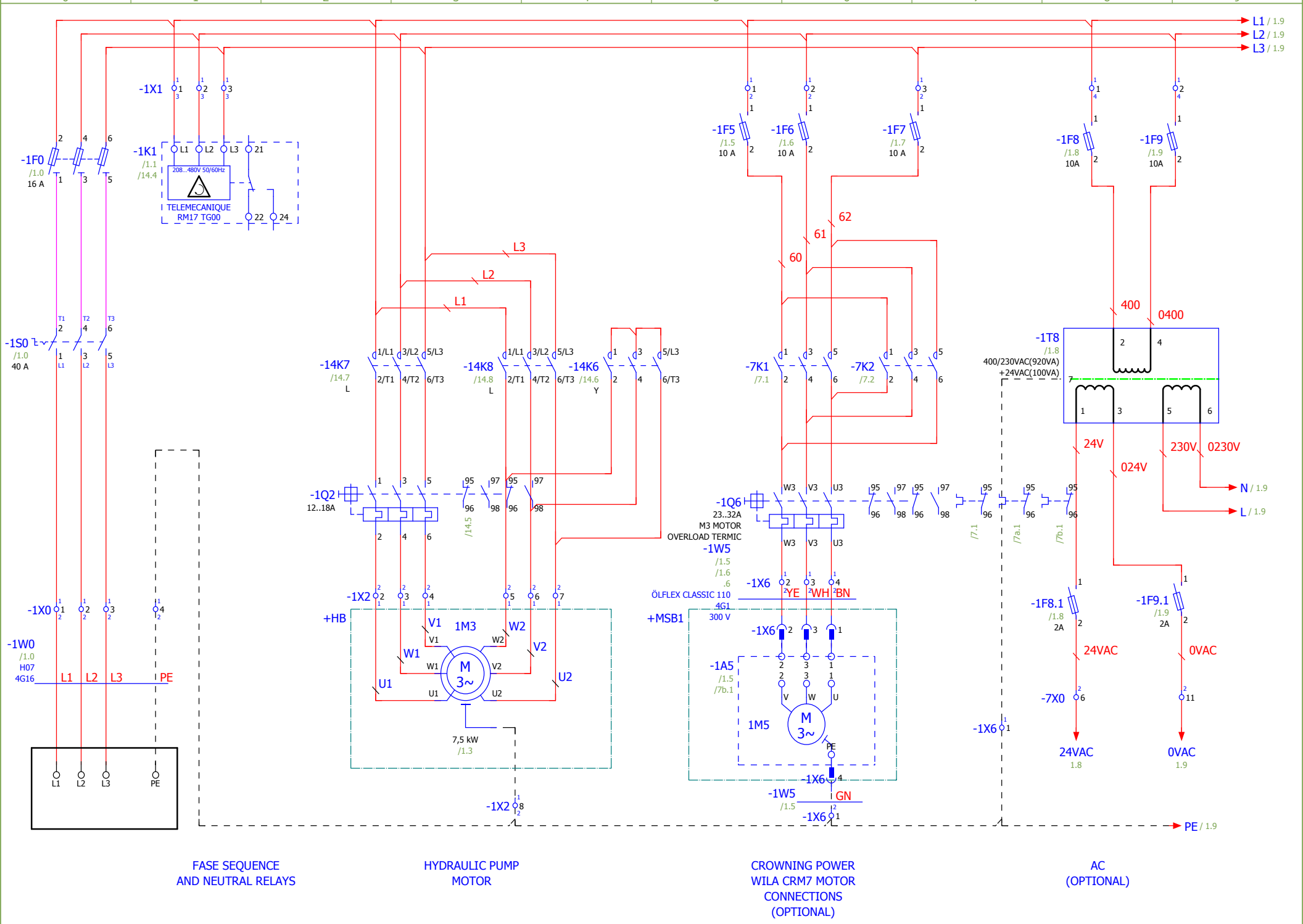

FASE SEQUENCE
AND NEUTRAL RELAYS

HYDRAULIC PUMP
MOTOR

CROWNING POWER
WILA CRM7 MOTOR
CONNECTIONS
(OPTIONAL)

AC
(OPTIONAL)

RICO Precision Ideas			Date	15-06-2016	RICO	Power supply	= EDM	
			Ed.	marcilio.silva			+ MCBN	
			Appr		PRCB 30100 SN2390 DA-66T			Page 1a
Modification	Date	Name	Original		X, R, AKAS II-M, RICO CROWNING			Total pages112

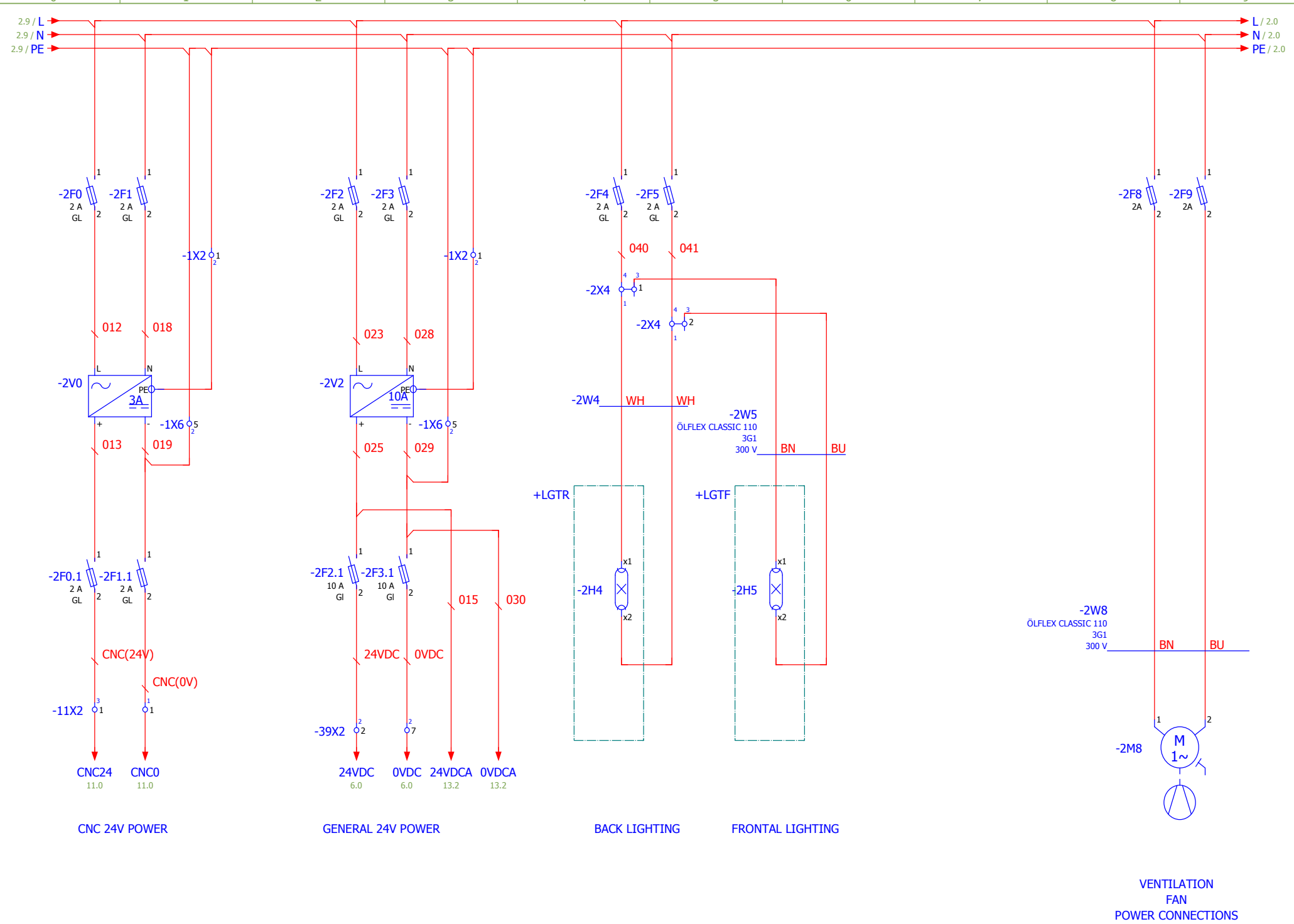

1a

2a

RICO Precision Ideas				Date	18-03-2016	RICO	Power supply	= EDM
				Ed.	marcilio.silva			+ MCBN
				Appr		PRCB 30100 SN2390 DA-66T		Page 2
	Modification	Date	Name	Original		X, R, AKAS II-M, RICO CROWNING		Total pages112

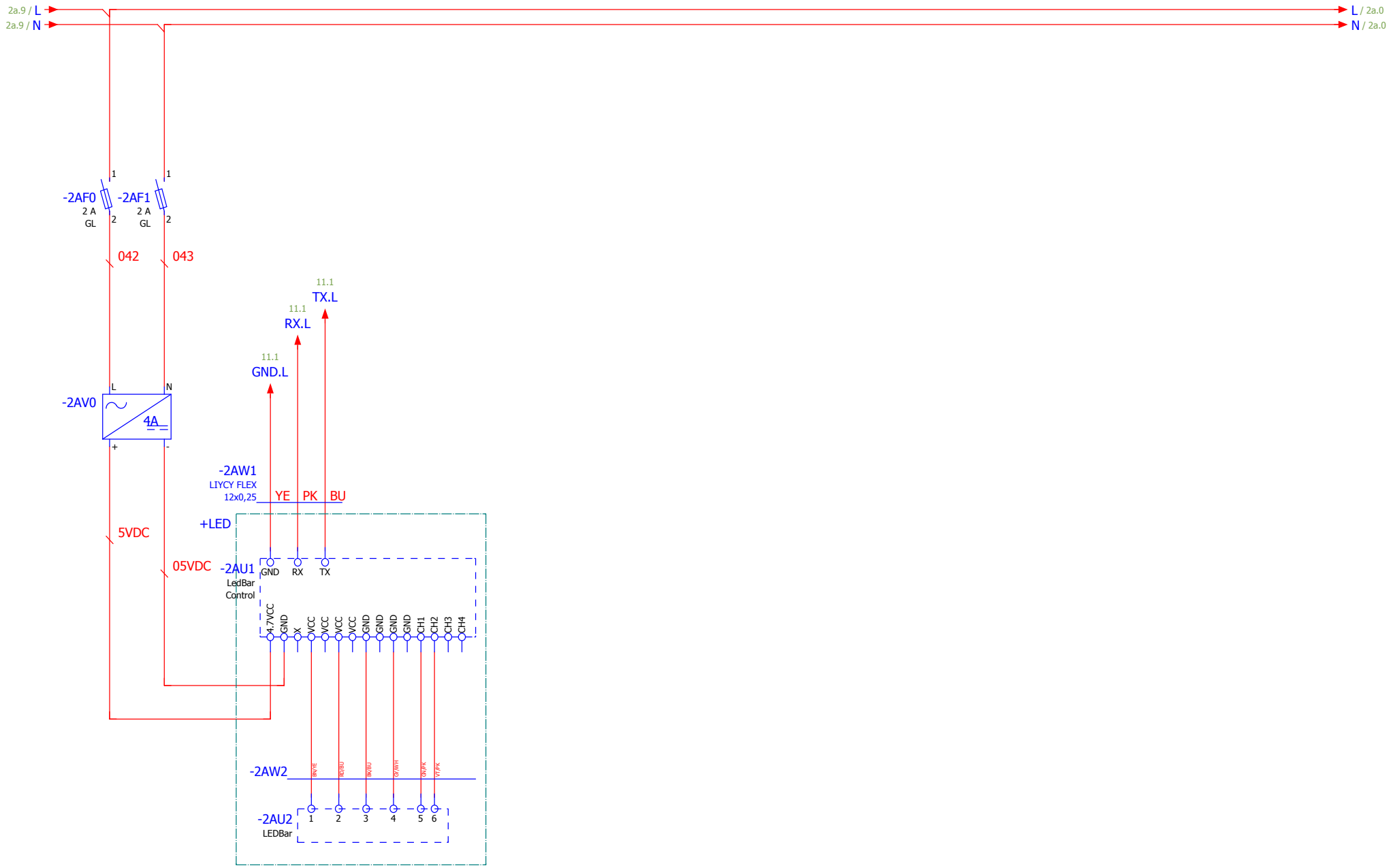

RICO Precision Ideas				Date	03-03-2016	RICO	Power supply	= EDM
				Ed.	marcilio.silva			+ MCBN
				Appr		PRCB 30100 SN2390 DA-66T		
	Modification	Date	Name	Original		X, R, AKAS II-M, RICO CROWNING		Page 2a / Total pages112

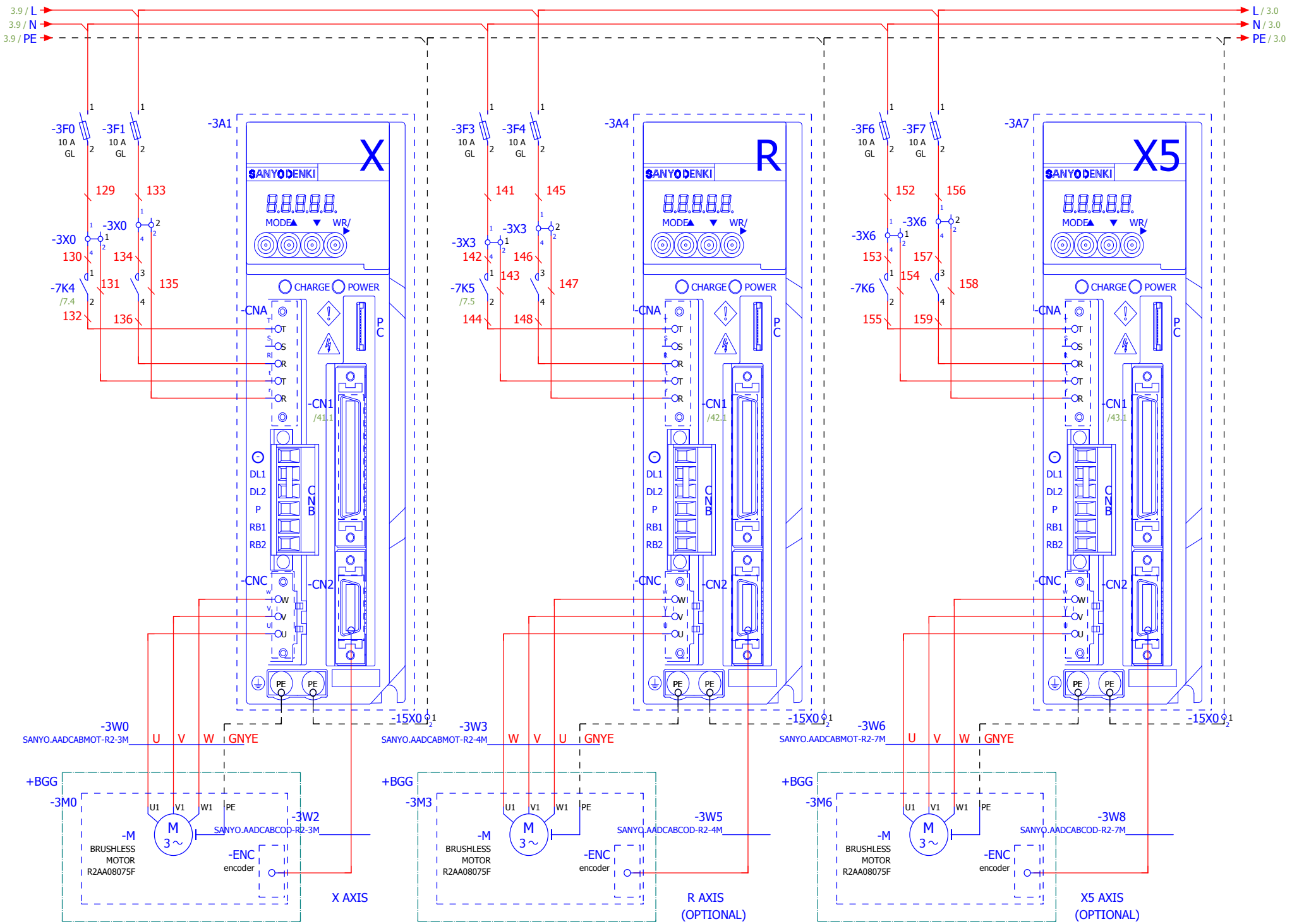

2a

4

RICO Precision Ideas			Date	18-03-2016	RICO	Drives 1	= EDM
			Ed.	marcilio.silva			+ MCBN
			Appr		PRCB 30100 SN2390 DA-66T		Page 3
Modification	Date	Name	Original		X, R, AKAS II-M, RICO CROWNING		Total pages112

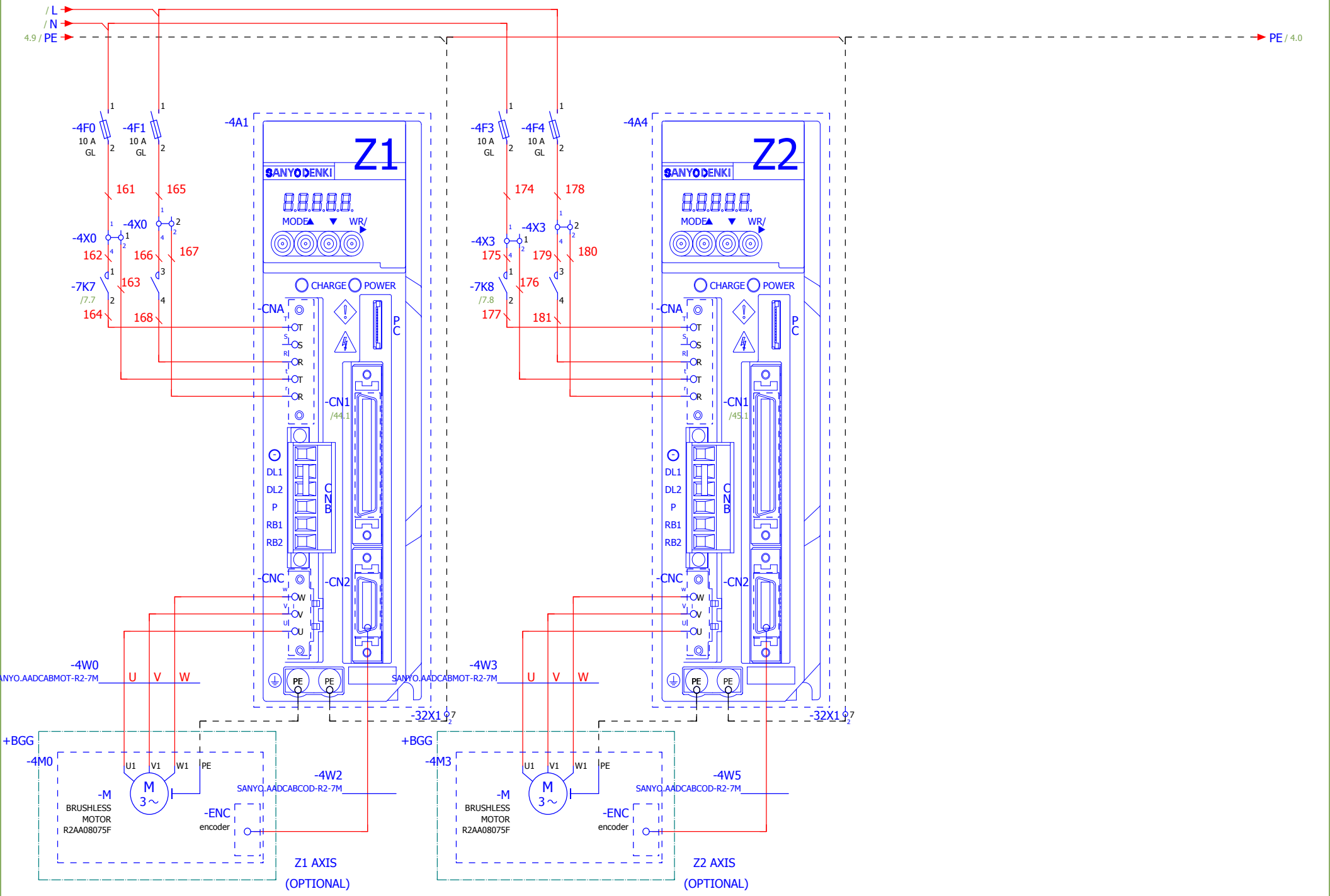

RICO Precision Ideas				Date	18-03-2016	RICO	Drives 2	= EDM
				Ed.	marcilio.silva			+ MCBN
				Appr		PRCB 30100 SN2390 DA-66T		Page 4
Modification	Date	Name		Original		X, R, AKAS II-M, RICO CROWNING		Total pages112

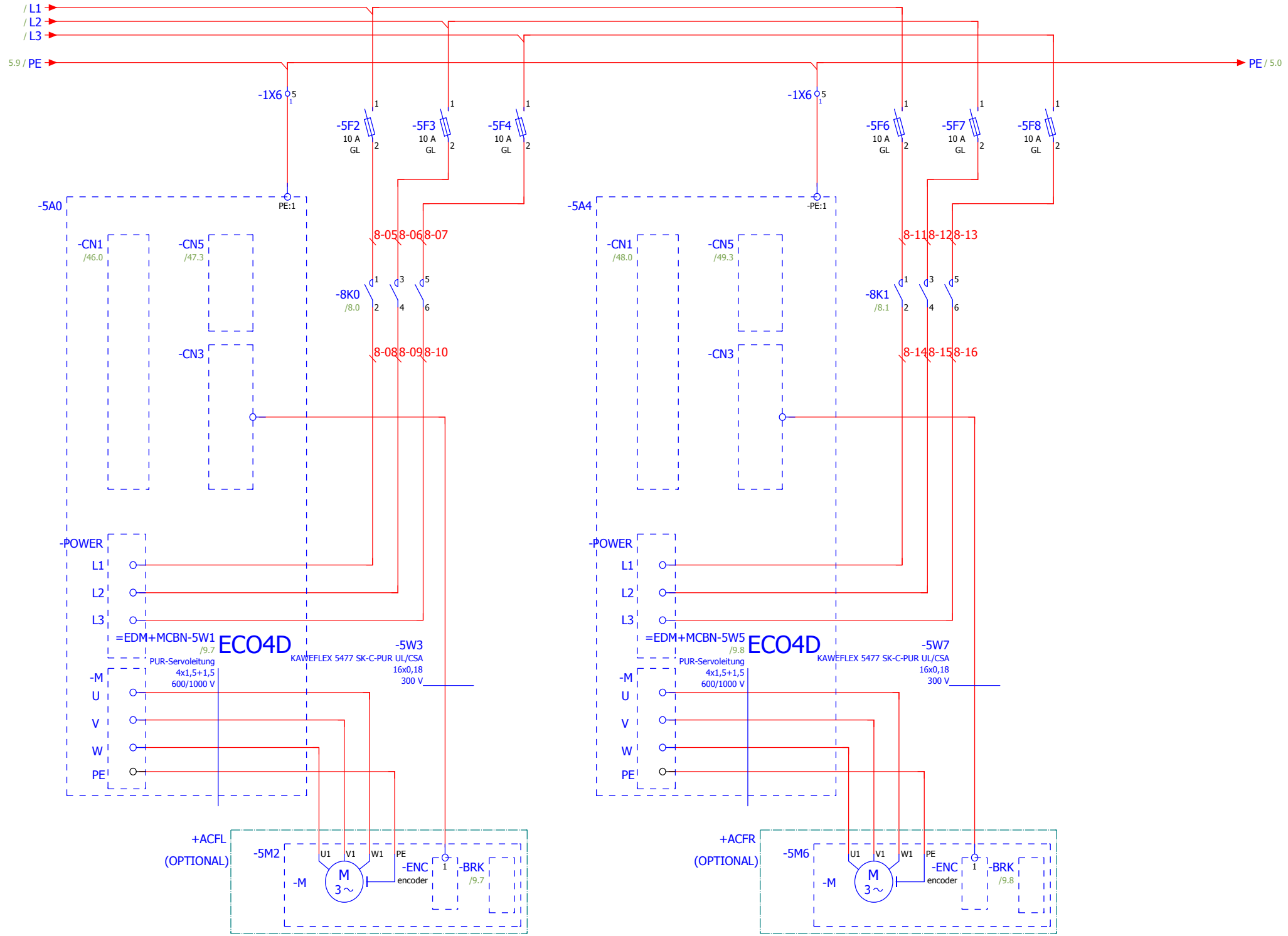

RICO Precision Ideas				Date	18-03-2016	RICO	Drives 3	= EDM
				Ed.	marcilio.silva			+ MCBN
				Appr		PRCB 30100 SN2390 DA-66T		Page 5
	Modification	Date	Name	Original		X, R, AKAS II-M, RICO CROWNING		Total pages112

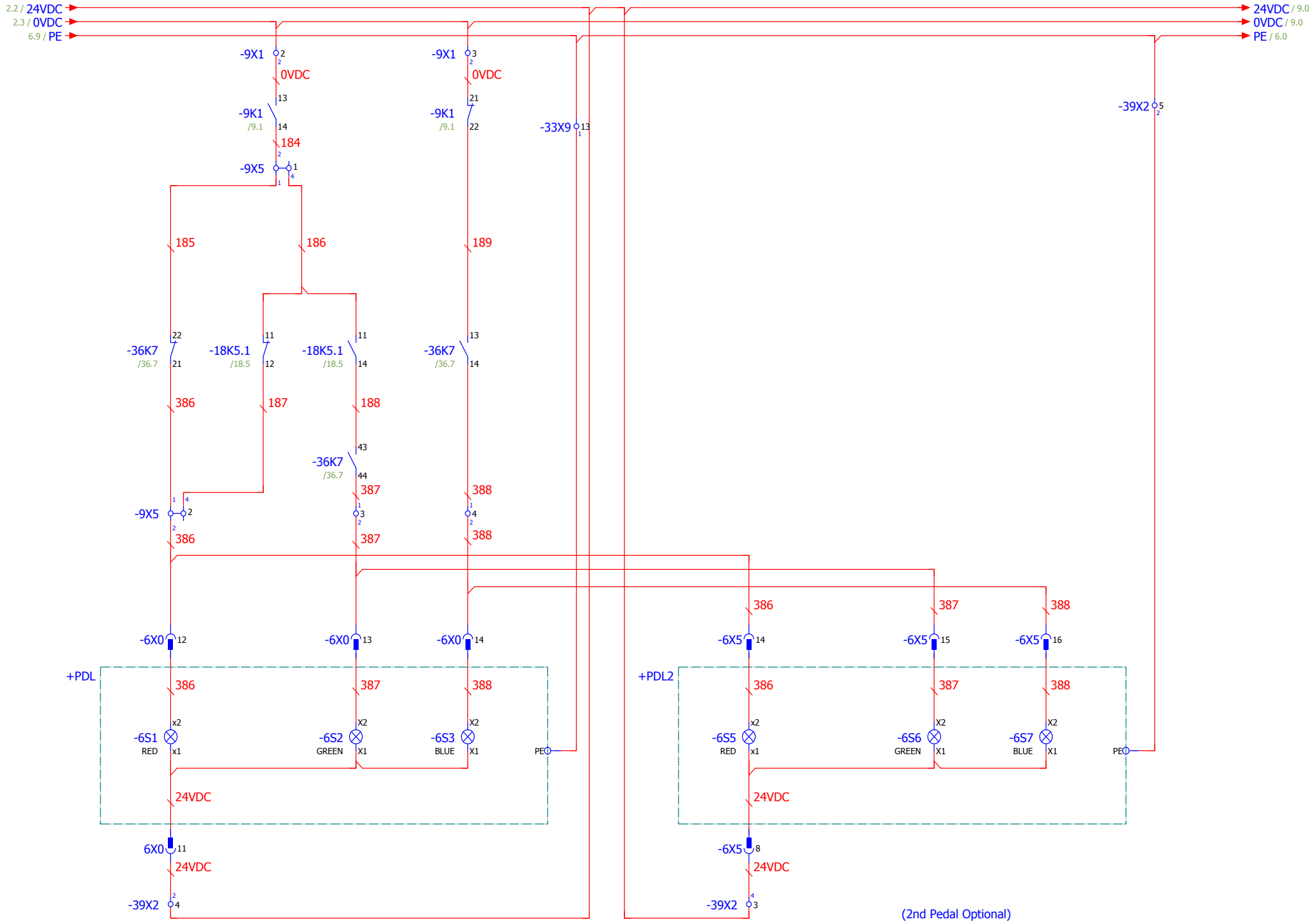

RICO Precision Ideas			Date	18-03-2016	RICO	Pedal light connections	= EDM	
			Ed.	marcilio.silva			+ MCBN	
			Appr		PRCB 30100 SN2390 DA-66T			Page 6
Modification	Date	Name	Original		X, R, AKAS II-M, RICO CROWNING			Total pages112

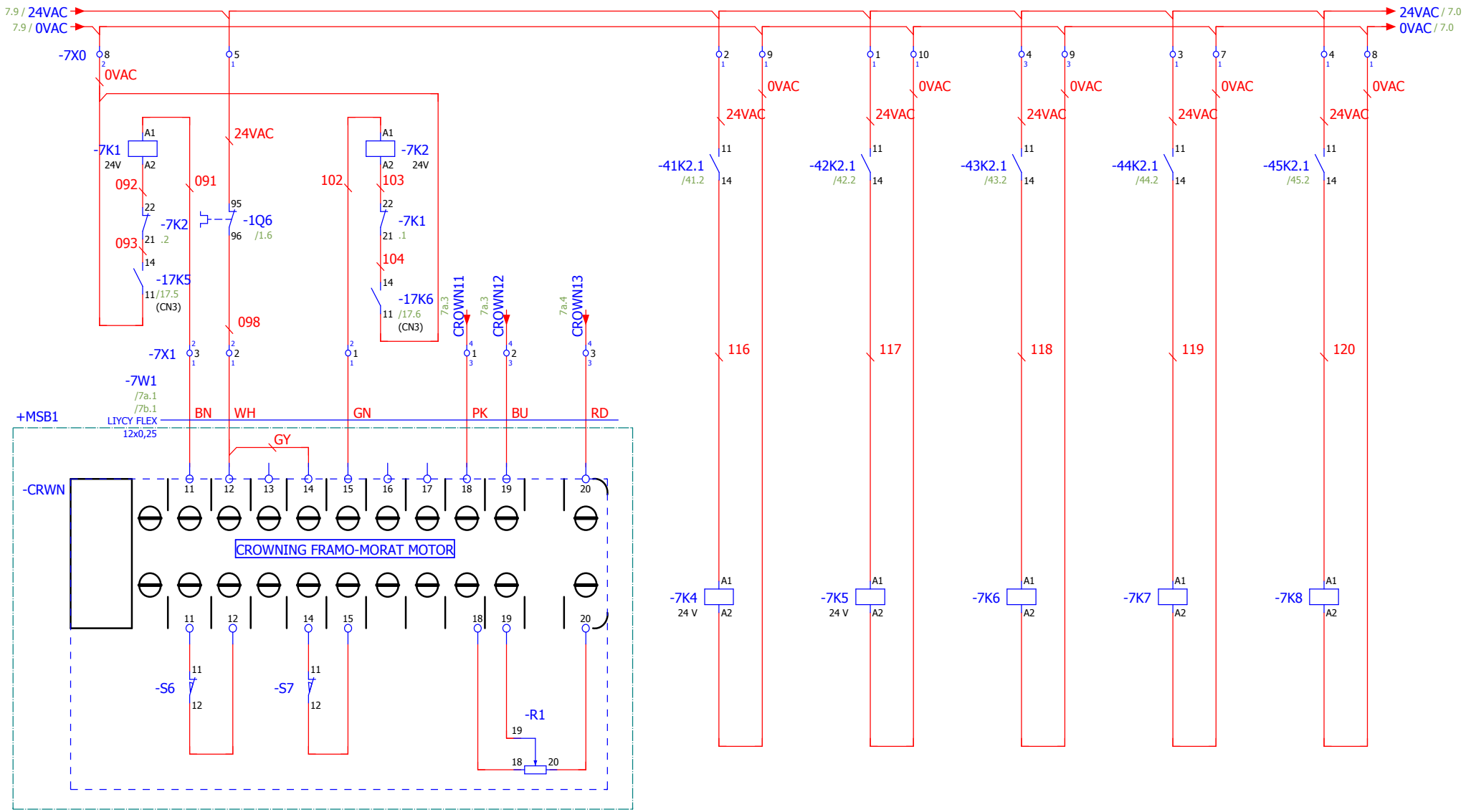

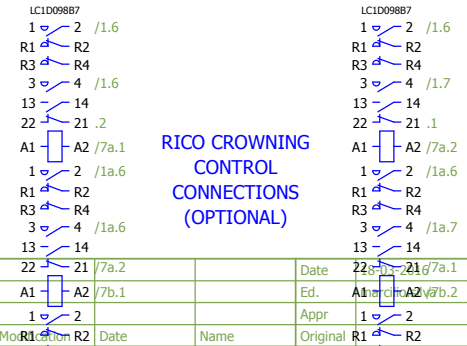

RICO CROWNING CONTROL CONNECTIONS (OPTIONAL)

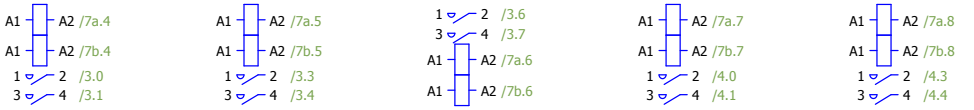

X AXIS POWER CONTACTOR COIL

R AXIS POWER CONTACTOR COIL

X5 AXIS POWER CONTACTOR COIL

Z1 AXIS POWER CONTACTOR COIL

Z2 AXIS POWER CONTACTOR COIL

(ALL OPTIONAL AXIS)

6

7a

RICO Precision Ideas	Modification	Date	Name	Date 28-01-2016	RICO	24VAC Control	= EDM
				Ed.	PRCB 30100 SN2390 DA-66T		+ MCBN
				Appr	X, R, AKAS II-M, RICO CROWNING		Page 7
				Original			Total pages112

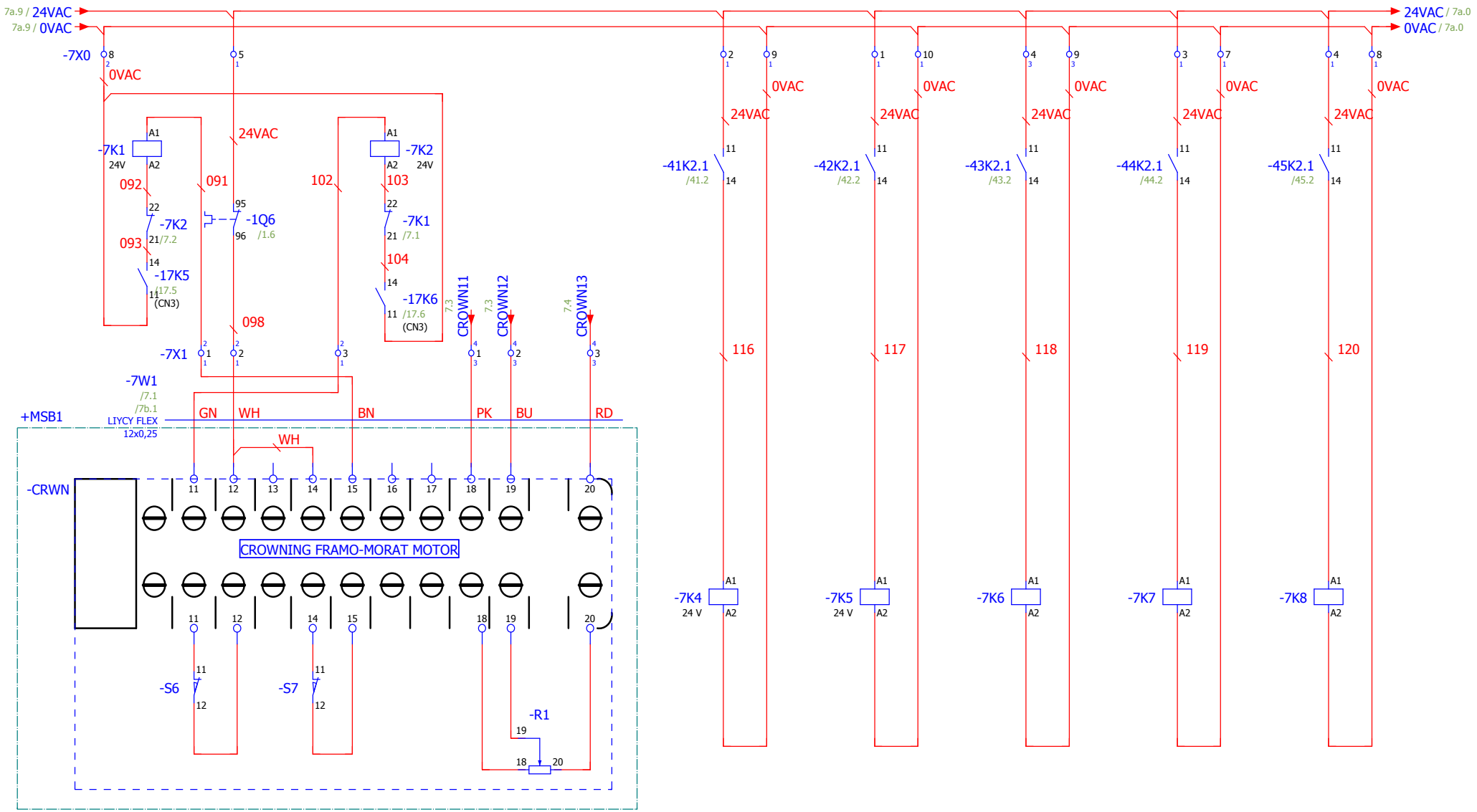

RICO Precision Ideas	Modification	Date	Name	Date 20-05-2016	RICO	24VAC Control	= EDM
				Ed.	PRCB 30100 SN2390 DA-66T		+ MCBN
				Appr	X, R, AKAS II-M, RICO CROWNING		Page 7a
				Original			Total pages112

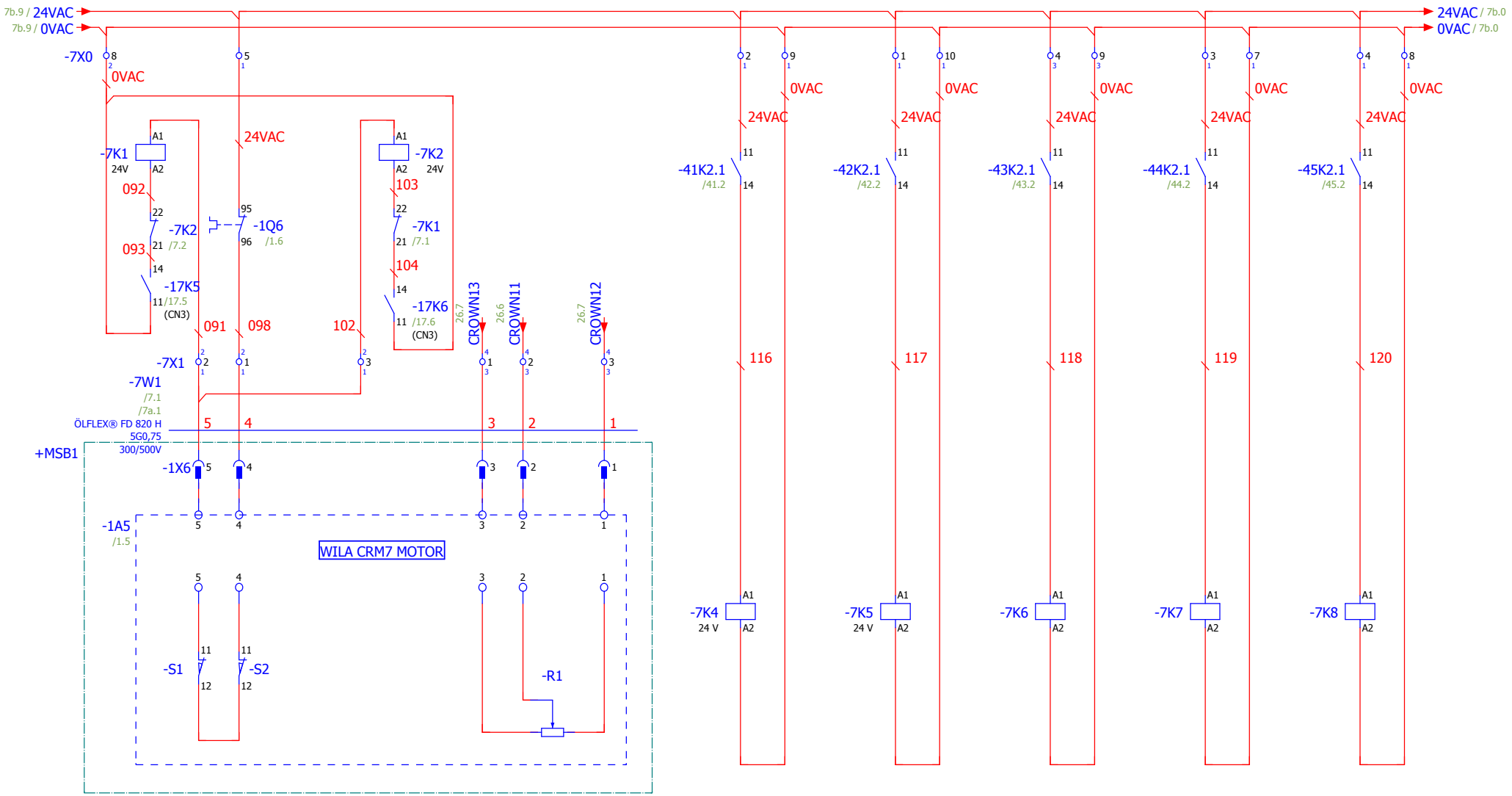

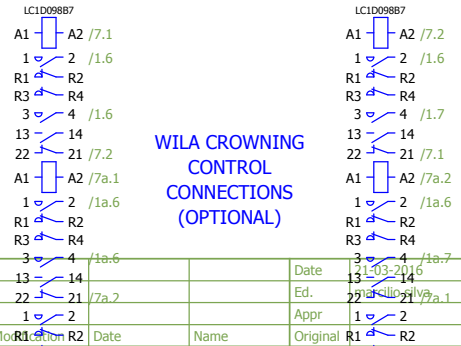

WILA CROWNING CONTROL CONNECTIONS (OPTIONAL)

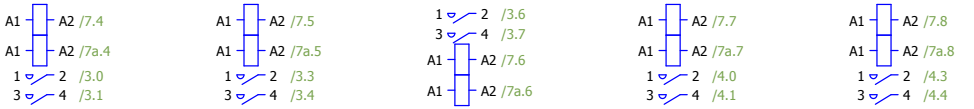

X AXIS POWER CONTACTOR COIL

R AXIS POWER CONTACTOR COIL

X5 AXIS POWER CONTACTOR COIL

Z1 AXIS POWER CONTACTOR COIL

Z2 AXIS POWER CONTACTOR COIL

(ALL OPTIONAL AXIS)

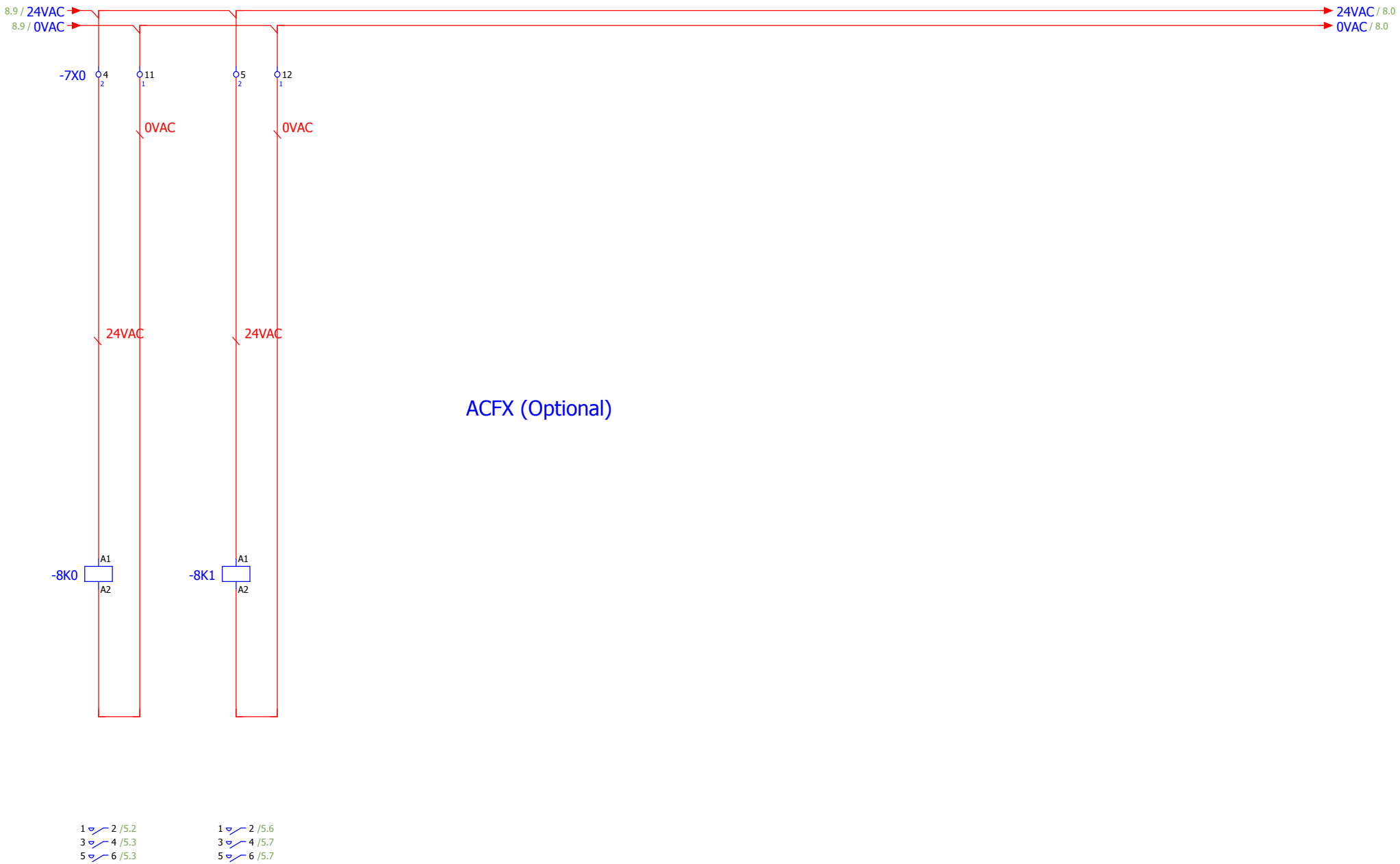

(OPTIONALS)

RICO Precision Ideas				Date	18-03-2016	RICO	24VAC Control	= EDM
				Ed.	marcilio.silva			+ MCBN
				Appr		PRCB 30100 SN2390 DA-66T		Page 8
	Modification	Date	Name	Original		X, R, AKAS II-M, RICO CROWNING		Total pages112

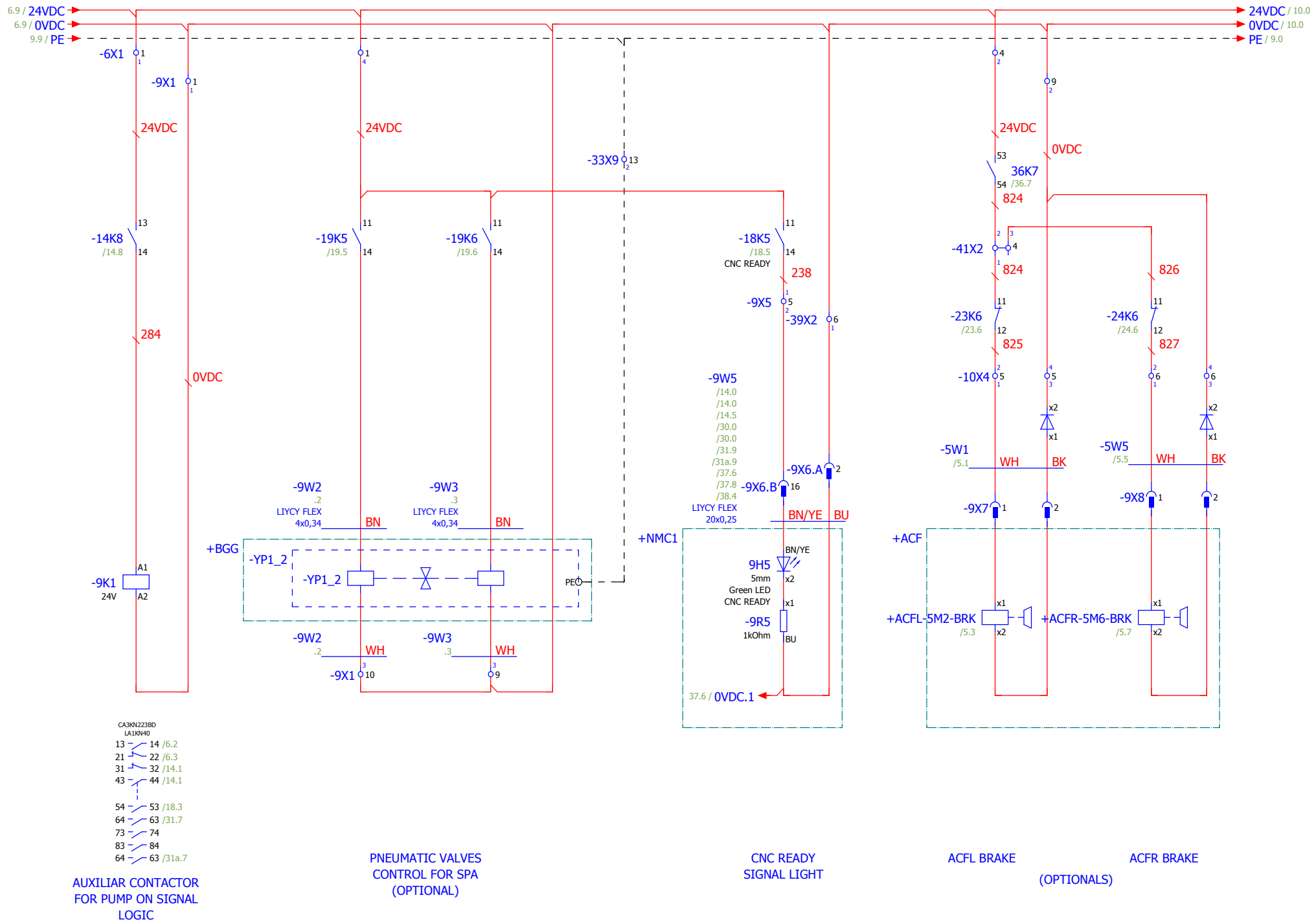

Modification	Date	Name	Date	18-03-2016	RICO	24VDC	= EDM
			Ed.	marcilio.silva			+ MCBN
			Appr		PRCB 30100 SN2390 DA-66T		Page 9
			Original		X, R, AKAS II-M, RICO CROWNING		Total pages112

Precision Ideas

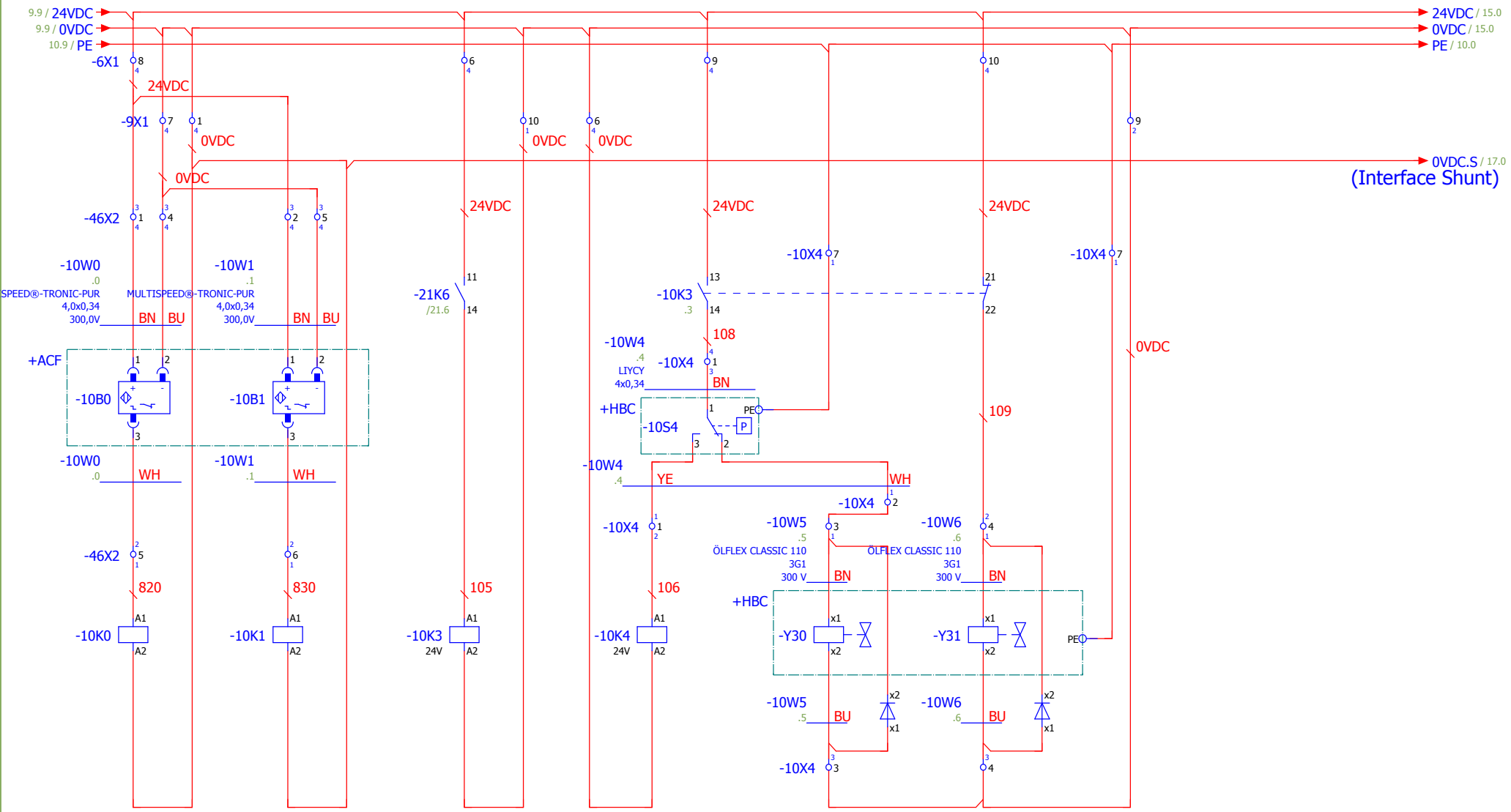

PLC-RSC-24DC/21
14 — 11 /23.4
11 — 12

PLC-RSC-24DC/21
14 — 11 /24.4
11 — 12

CA3KN31BD3
13 — 14 .4
21 — 22 .6
33 — 34
43 — 44

CA3KN31BD3
14 — 13 /21.3
21 — 22
33 — 34
43 — 44 /33.4

WILLA HYDRAULIC CLAMPING
(OPTIONAL)

LEFT ACF RSD

RIGHT ACF RSD

(OPTIONALS)

CLAMPING ORDER
FROM CONTROLER

TOOL CLAMP
CONTROLER FEEDBACK

TOOL CLAMP
VALVE

TOOL RELEASE
VALVE

9

11

RICO Precision Ideas				Date	18-03-2016	RICO	24VDC	= EDM
				Ed.	marcilio.silva			+ MCBN
				Appr		PRCB 30100 SN2390 DA-66T		Page 10
	Modification	Date	Name	Original		X, R, AKAS II-M, RICO CROWNING		Total pages112

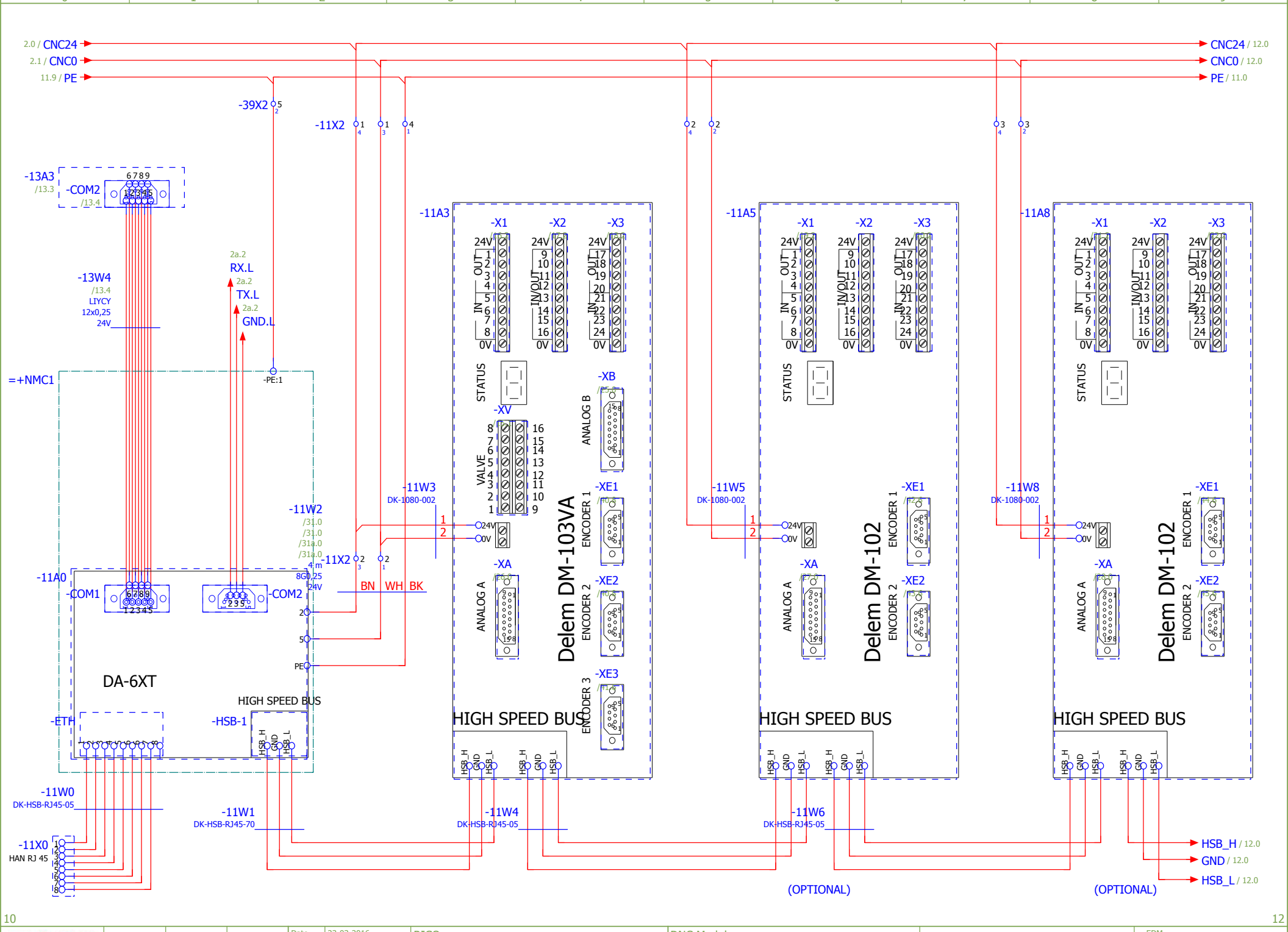

10 12

RICO Precision Ideas				Date	23-03-2016	RICO	DNC Modules
				Ed.	marcilio.silva		
				Appr		PRCB 30100 SN2390 DA-66T	
	Modification	Date	Name	Original		X, R, AKAS II-M, RICO CROWNING	

= EDM
+ MCBN

Page 11
Total pages112

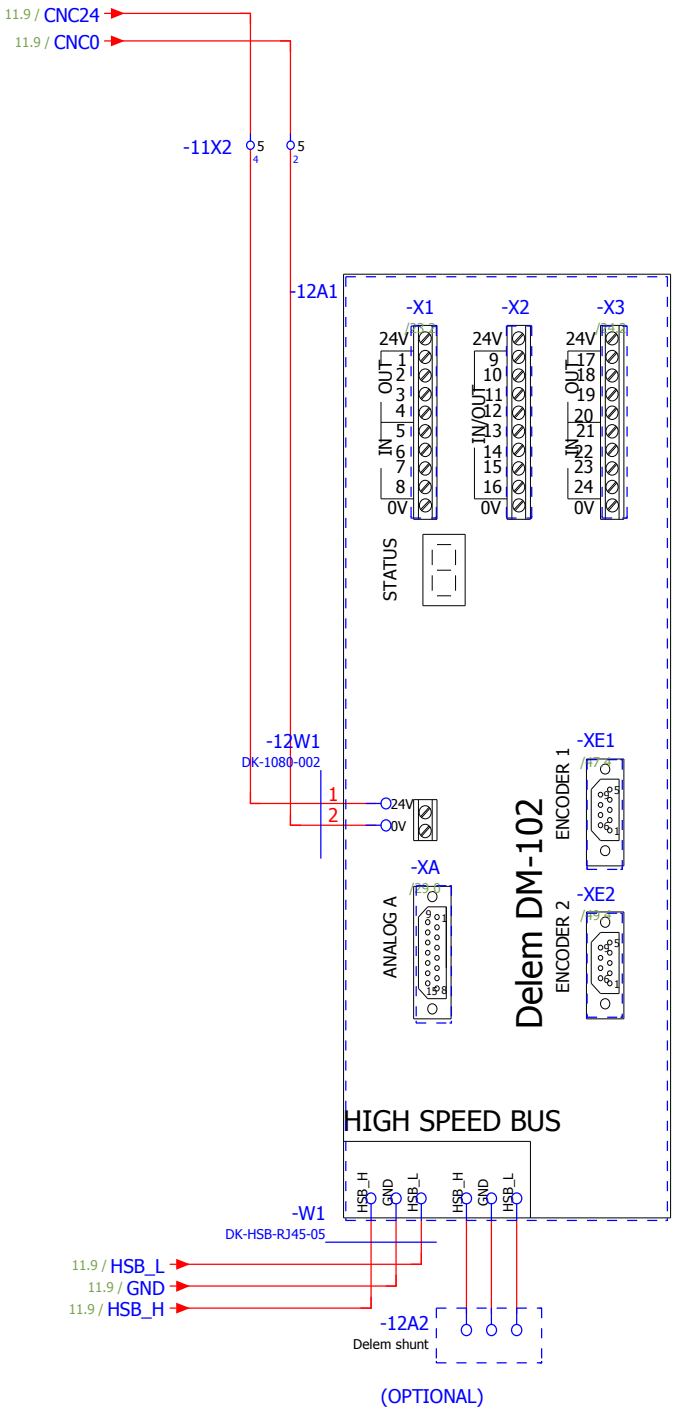

11

13

RICO Precision Ideas				Date	18-03-2016	RICO	DNC Modules	= EDM
				Ed.	marcilio.silva			+ MCBN
				Appr		PRCB 30100 SN2390 DA-66T		Page 12
	Modification	Date	Name	Original		X, R, AKAS II-M, RICO CROWNING		Total pages112

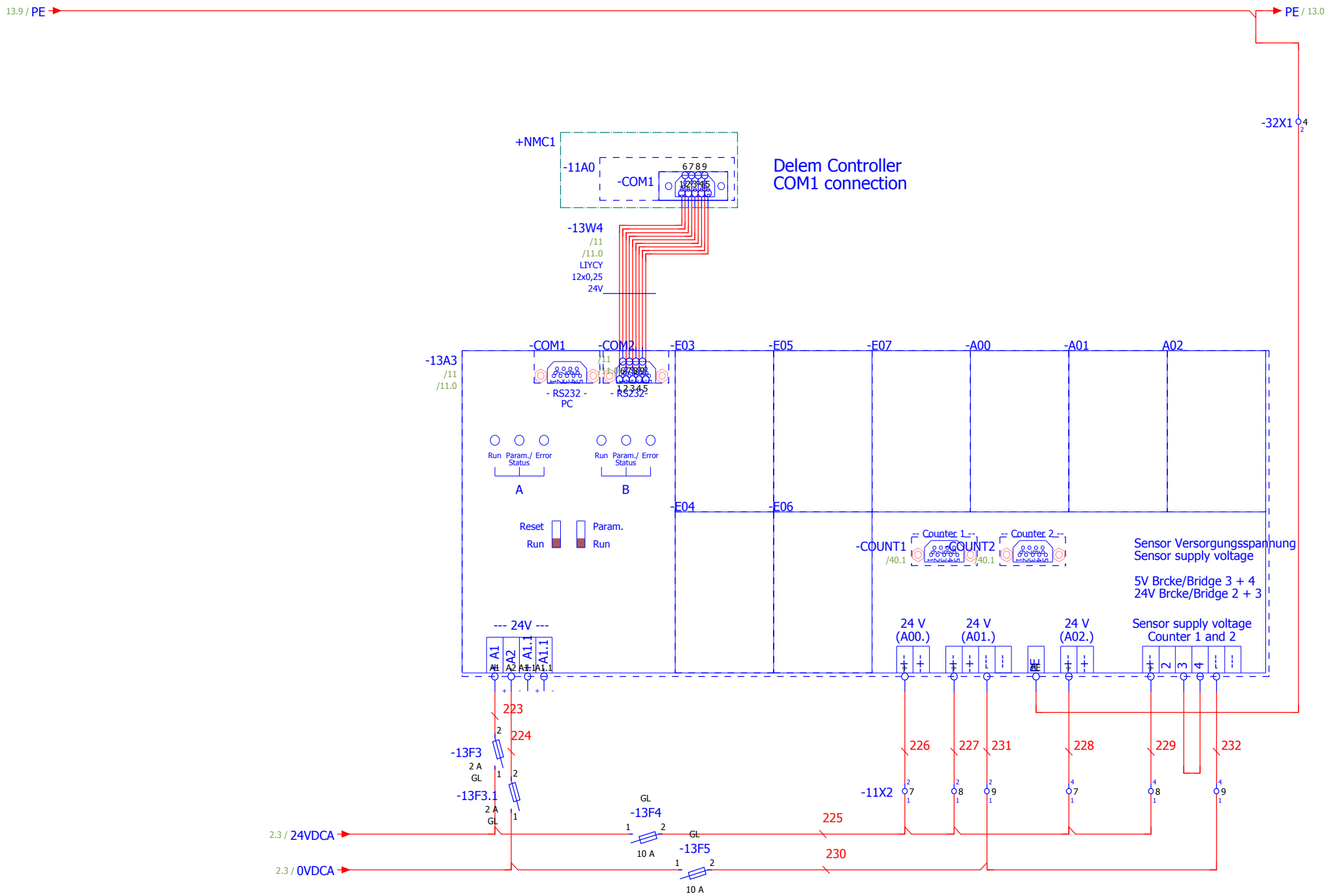

12

14

RICO Precision Ideas				Date	18-03-2016	RICO	FPSC-B-C-S	= EDM
				Ed.	marcilio.silva			+ MCBN
				Appr		PRCB 30100 SN2390 DA-66T		
	Modification	Date	Name	Original		X, R, AKAS II-M, RICO CROWNING		Page 13 / Total pages112

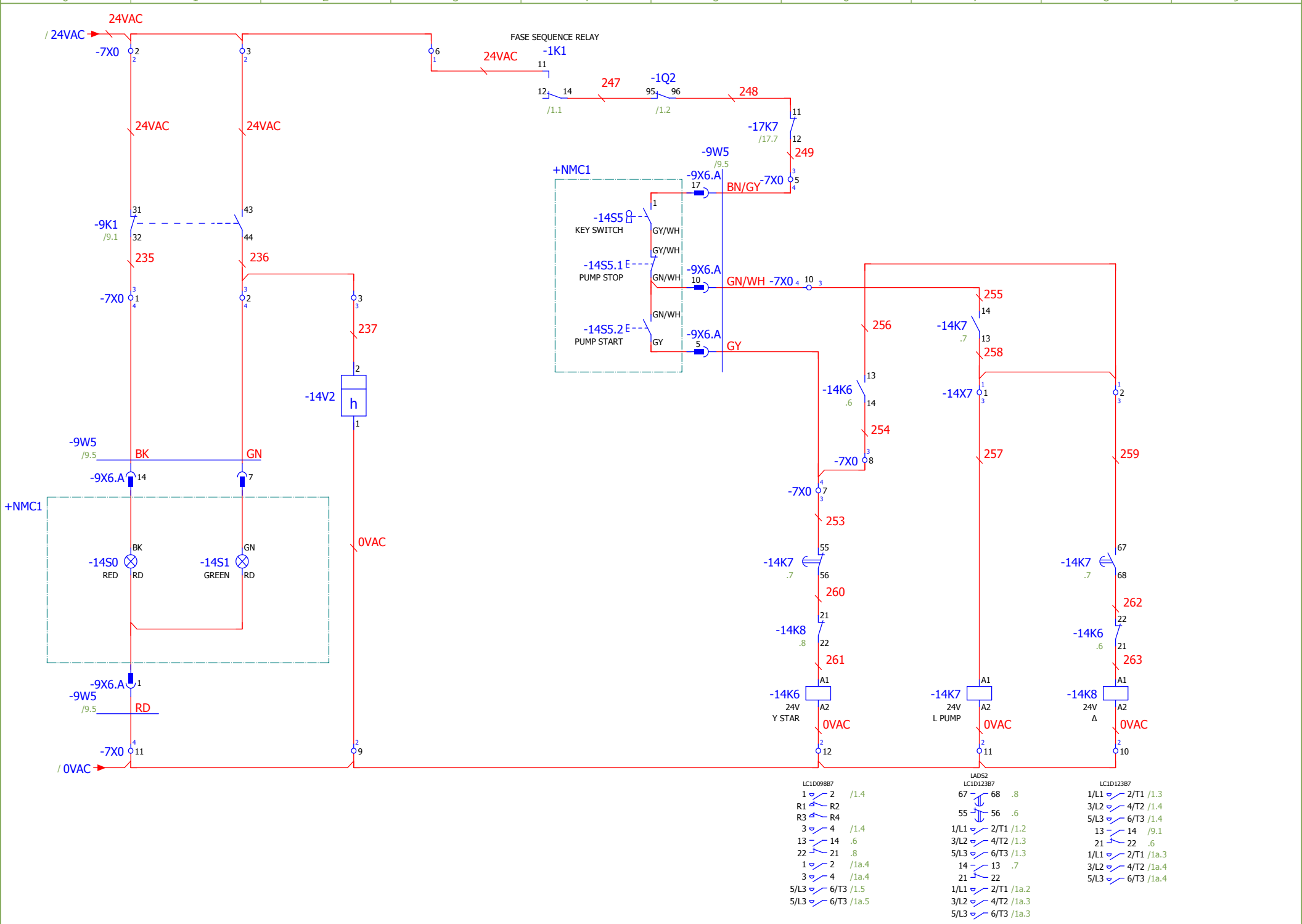

13 15

RICO Precision Ideas			Date	15-06-2016	RICO	Hydraulic pump start/stop	= EDM
			Ed.	marcilio.silva			+ MCBN
			Appr		PRCB 30100 SN2390 DA-66T		Page 14
Modification	Date	Name	Original		X, R, AKAS II-M, RICO CROWNING		Total pages112

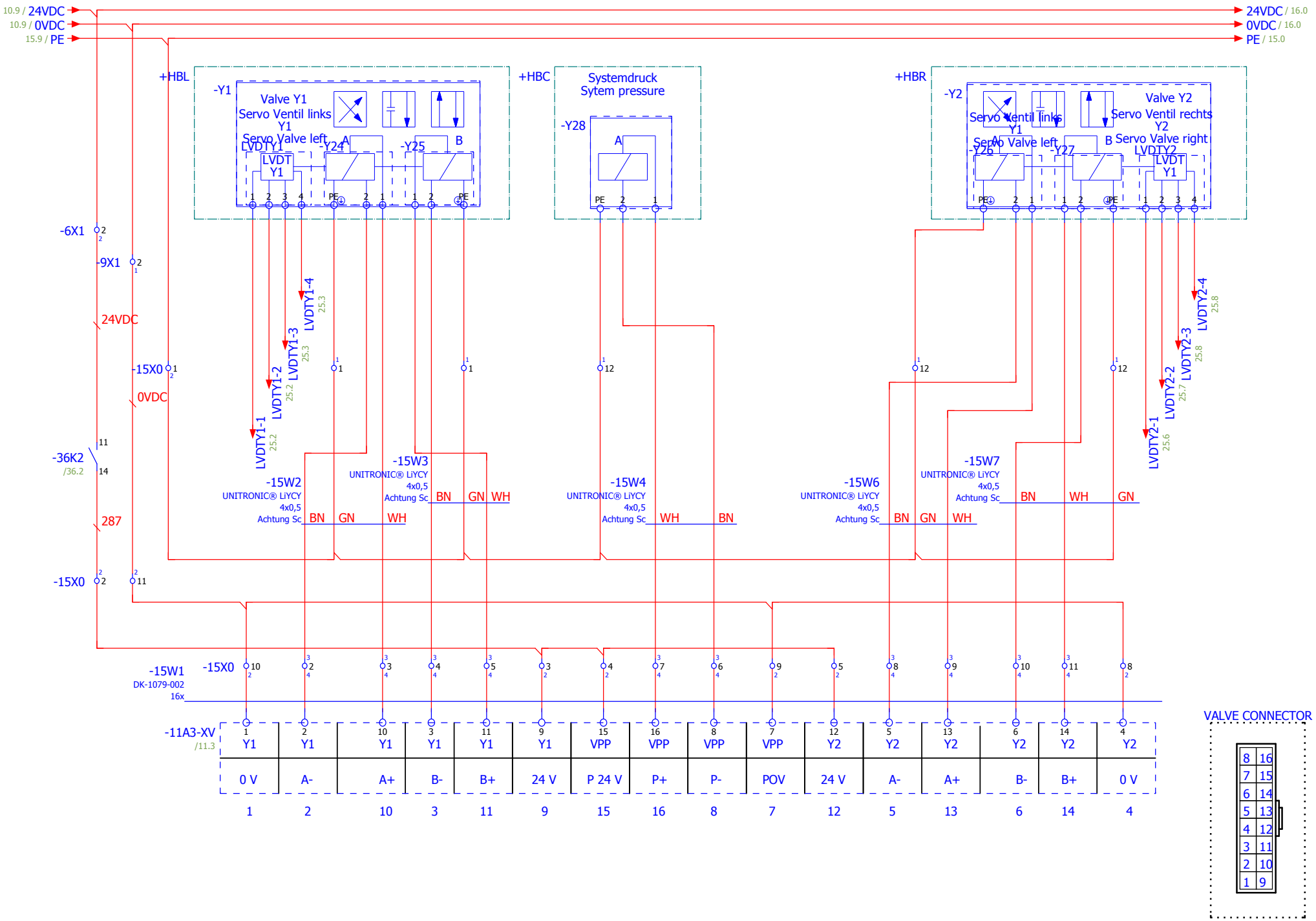

14 16

RICO Precision Ideas			Date	18-03-2016	RICO	Hydraulic proportinal valves control	= EDM	
			Ed.	marcilio.silva			+ MCBN	
			Appr		PRCB 30100 SN2390 DA-66T			Page 15
Modification	Date	Name	Original		X, R, AKAS II-M, RICO CROWNING			Total pages112

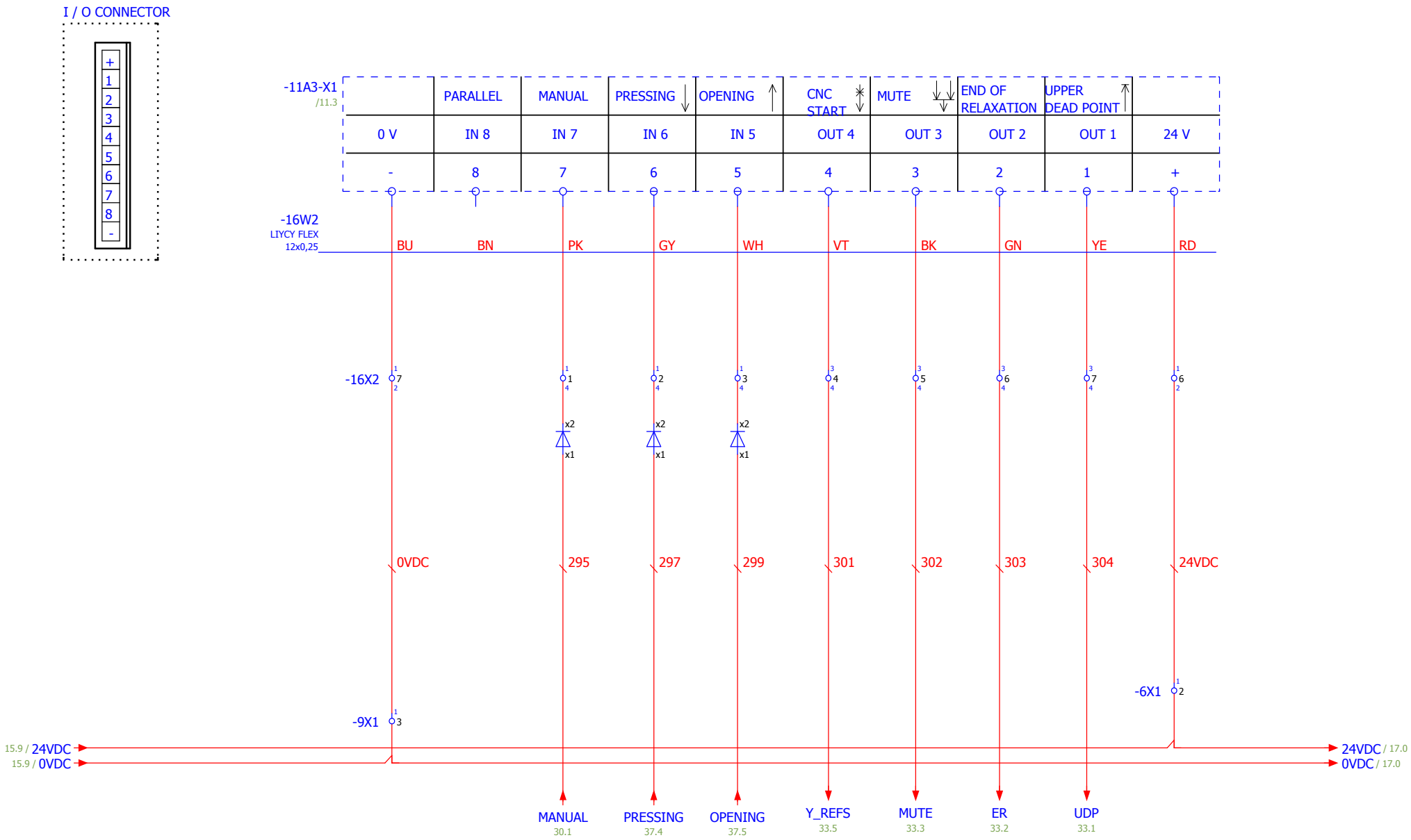

15

17

RICO Precision Ideas				Date	21-03-2016	RICO	Module AD1 I/O X1	= EDM
				Ed.	marcilio.silva			+ MCBN
				Appr		PRCB 30100 SN2390 DA-66T		Page 16
	Modification	Date	Name	Original		X, R, AKAS II-M, RICO CROWNING		Total pages112

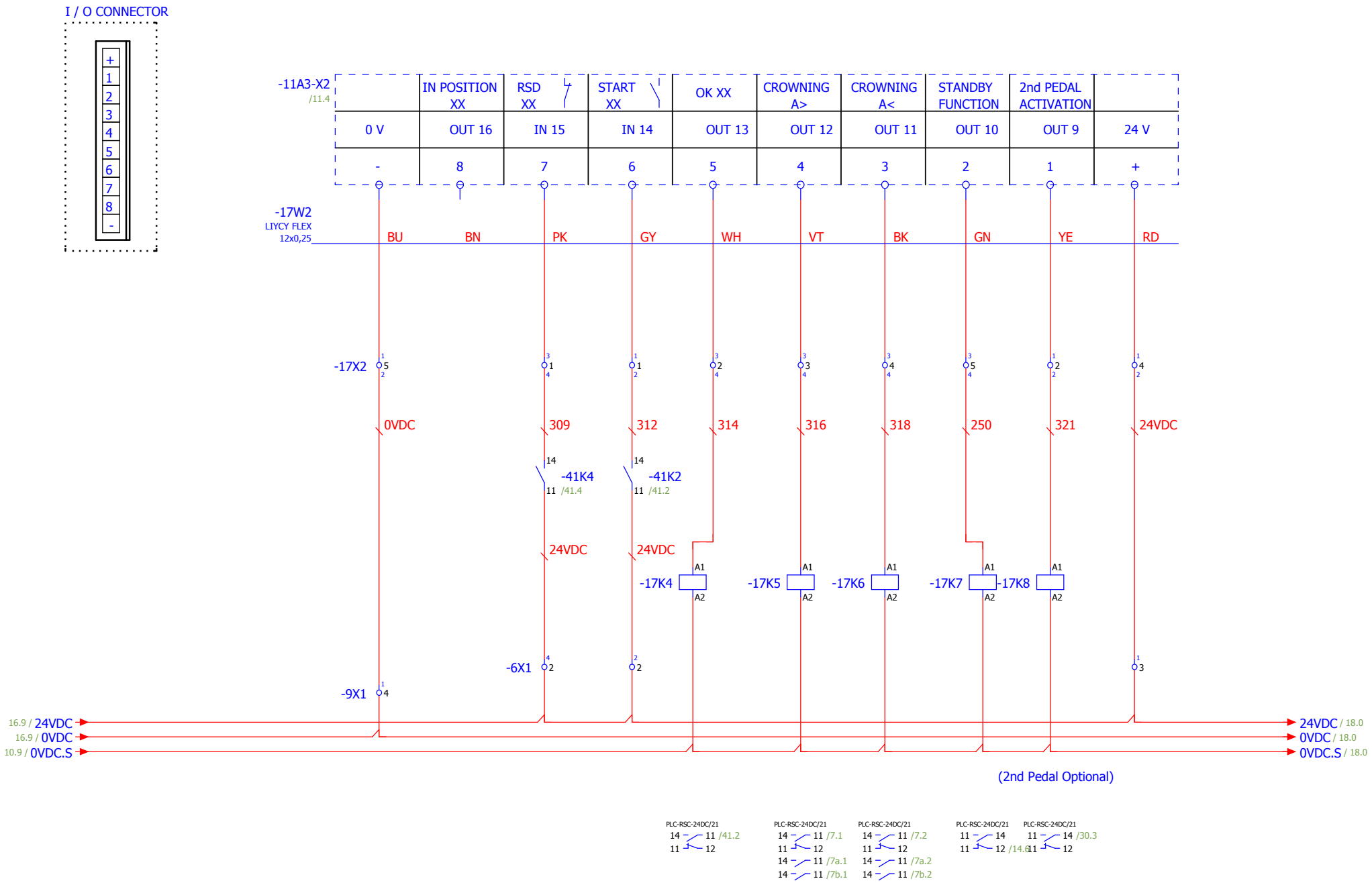

RICO Precision Ideas			Date	21-03-2016	RICO	Module AD1 I/O X2	= EDM	
			Ed.	marcilio.silva			+ MCBN	
			Appr		PRCB 30100 SN2390 DA-66T			Page 17
Modification	Date	Name	Original		X, R, AKAS II-M, RICO CROWNING			Total pages112

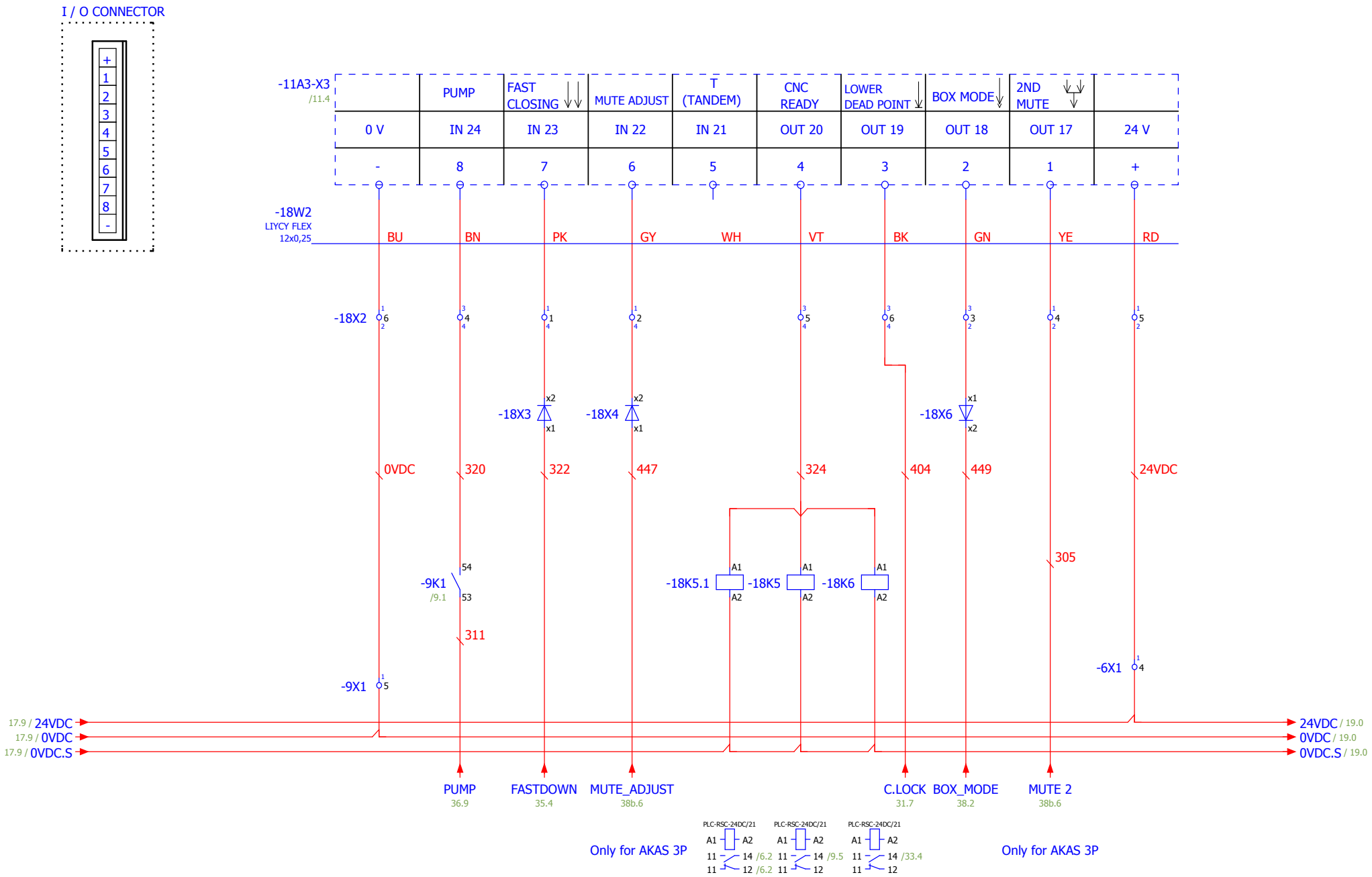

17

19

RICO Precision Ideas				Date	21-03-2016	RICO	Module AD1 I/O X3	= EDM
				Ed.	marcilio.silva			+ MCBN
				Appr		PRCB 30100 SN2390 DA-66T		Page 18
	Modification	Date	Name	Original		X, R, AKAS II-M, RICO CROWNING		Total pages112

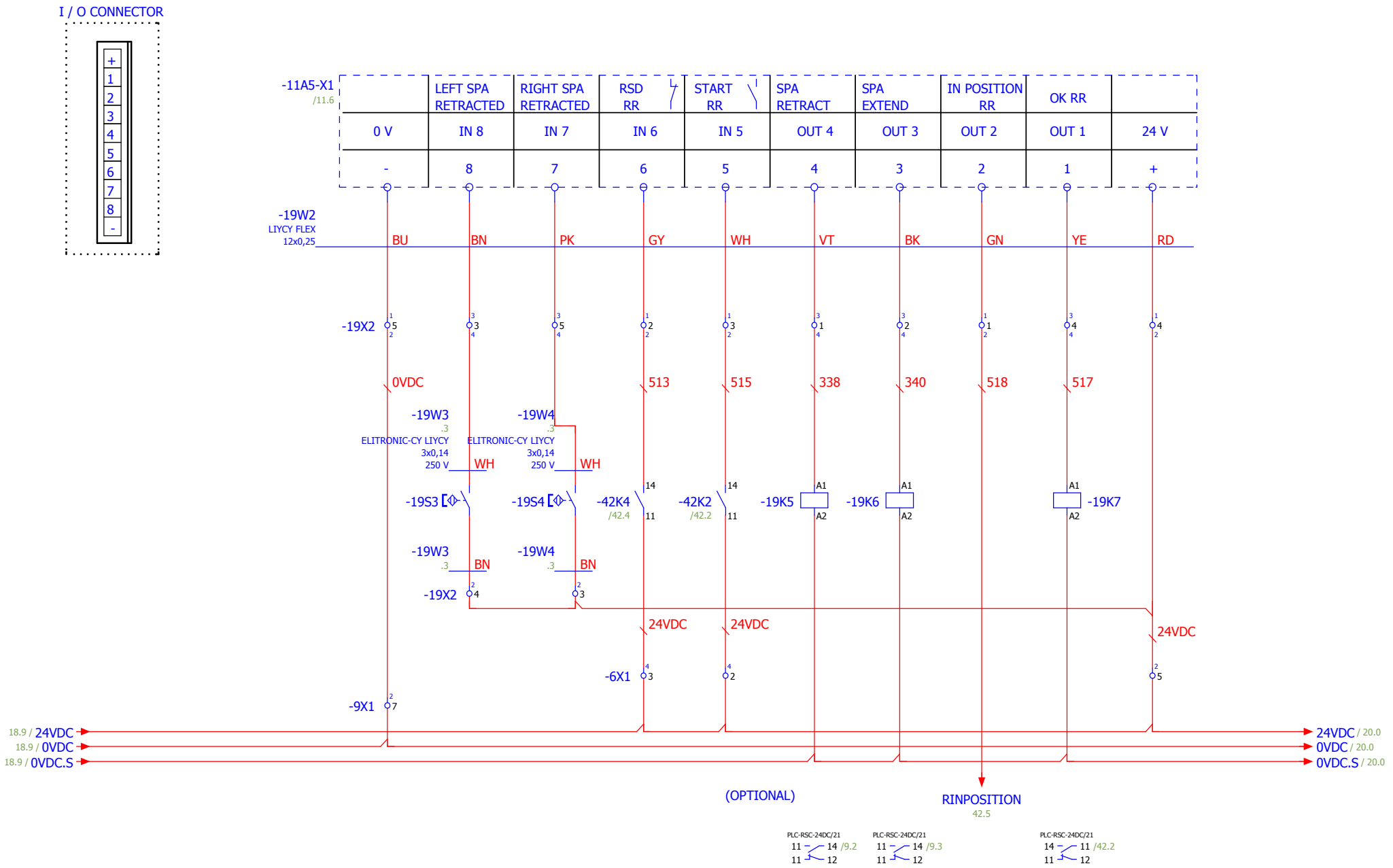

Modification	Date	Name	Date	21-03-2016	RICO PRCB 30100 SN2390 DA-66T X, R, AKAS II-M, RICO CROWNING	Module AD2 I/O X1	= EDM + MCBN
			Ed.	marcilio.silva			
			Appr				Page 19
			Original				Total pages112

Precision Ideas

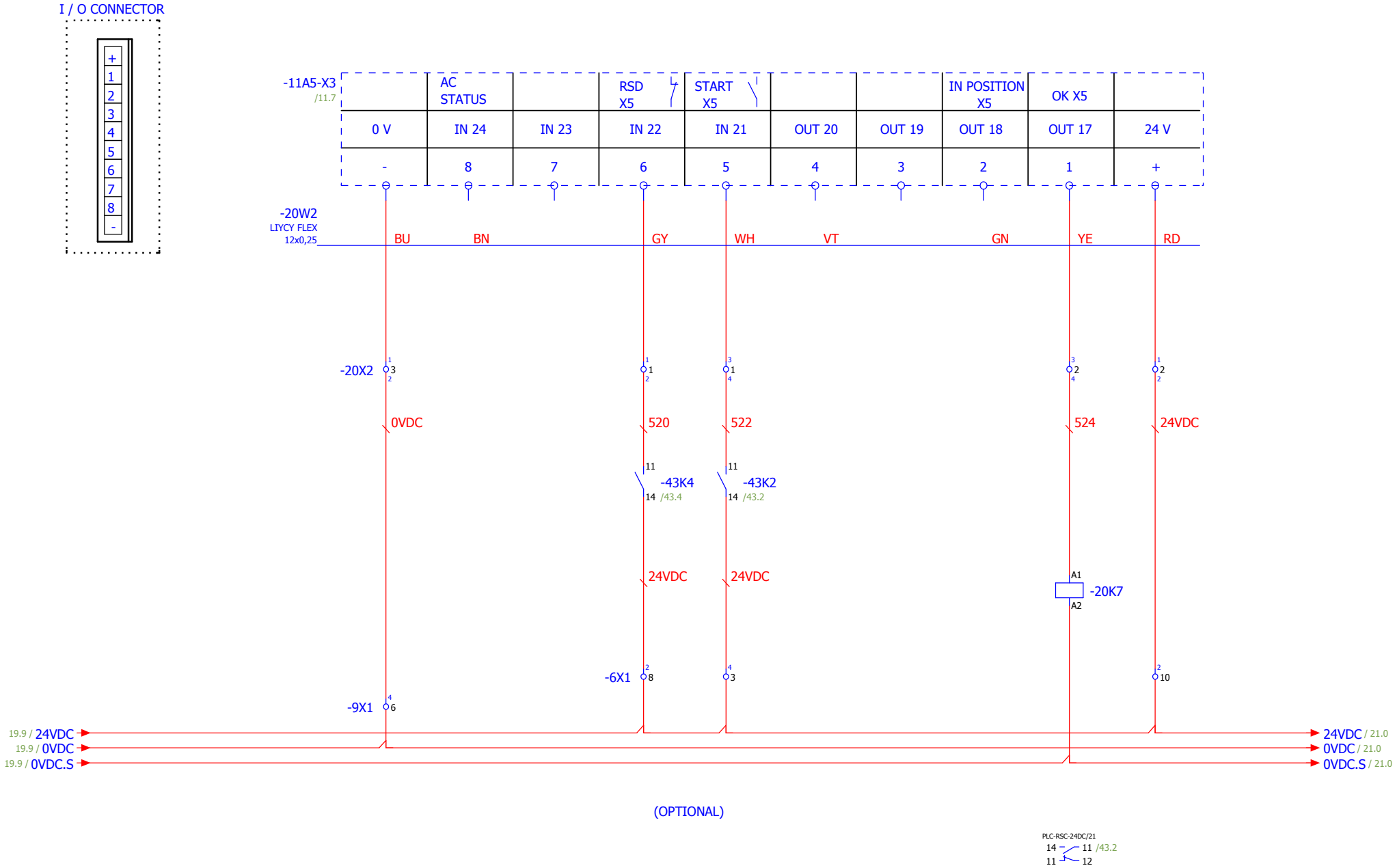

RICO Precision Ideas			Date	21-03-2016	RICO	Module AD2 I/O X3	= EDM	
			Ed.	marcilio.silva			+ MCBN	
			Appr		PRCB 30100 SN2390 DA-66T			Page 20
Modification	Date	Name	Original		X, R, AKAS II-M, RICO CROWNING			Total pages112

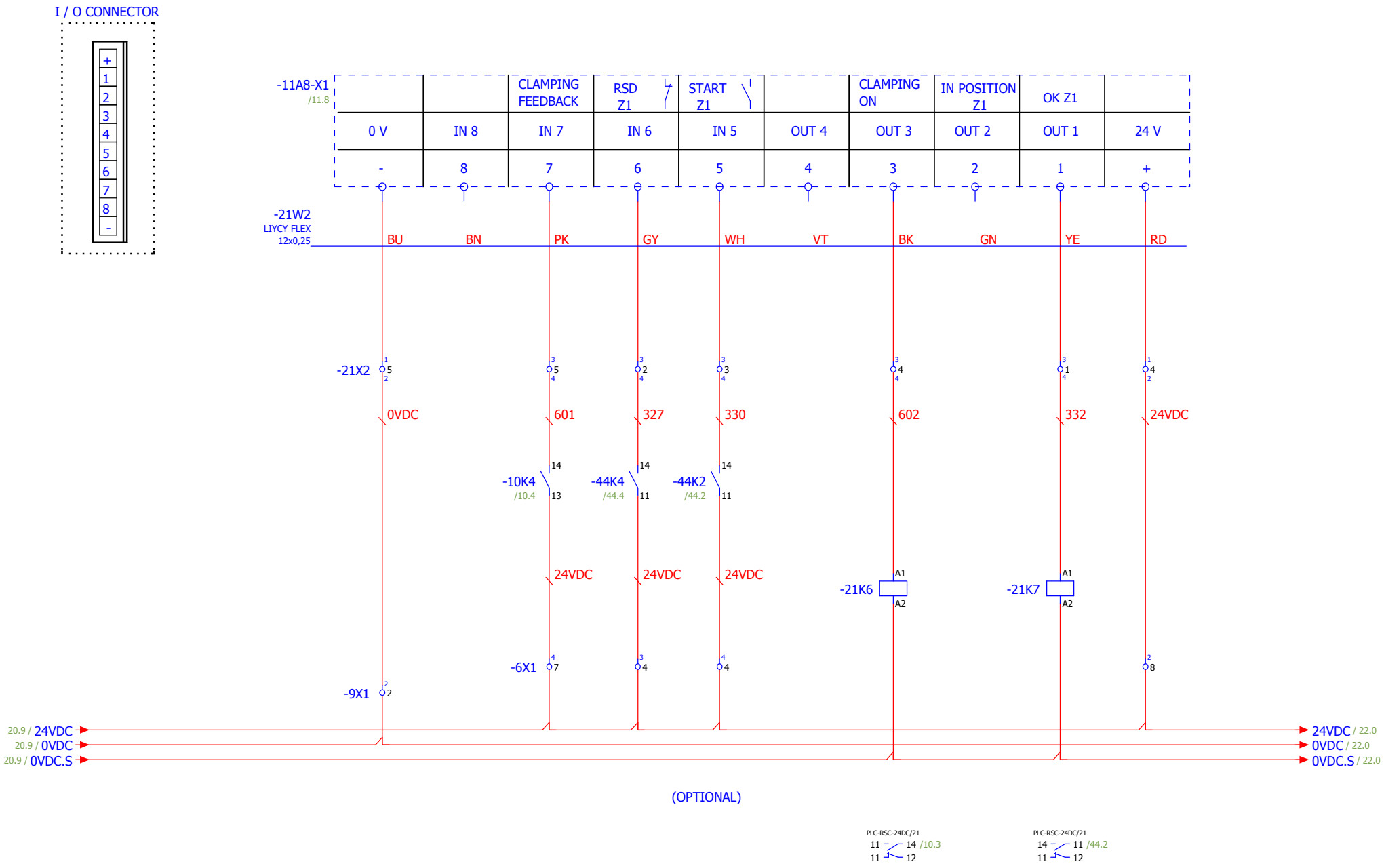

20

22

RICO Precision Ideas				Date	21-03-2016	RICO	Module AD3 I/O X1	= EDM
				Ed.	marcilio.silva			+ MCBN
				Appr		PRCB 30100 SN2390 DA-66T		Page 21
	Modification	Date	Name	Original		X, R, AKAS II-M, RICO CROWNING		Total pages112

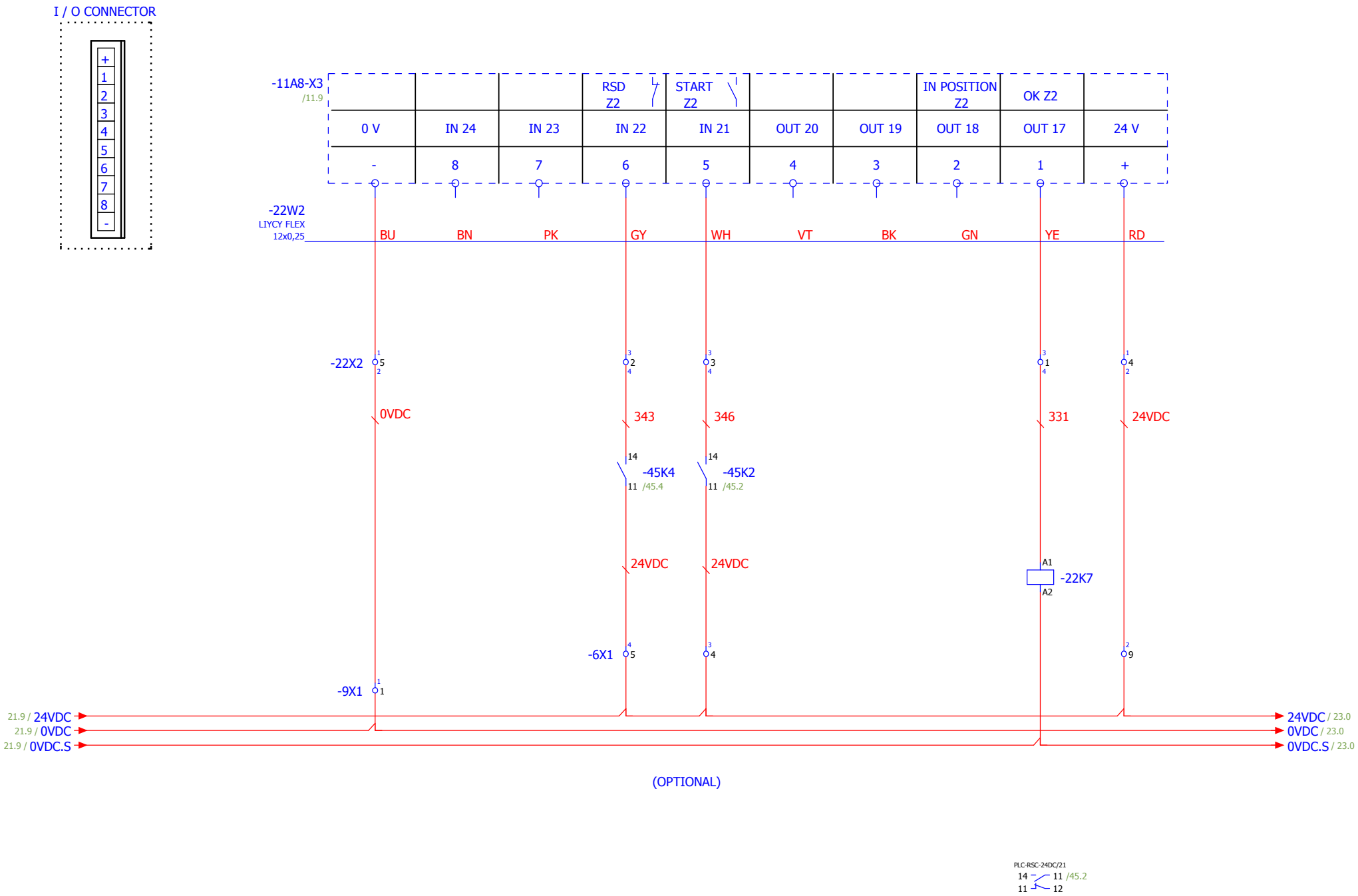

RICO Precision Ideas			Date	21-03-2016	RICO	Module AD3 I/O X3	= EDM	
			Ed.	marcilio.silva			+ MCBN	
			Appr		PRCB 30100 SN2390 DA-66T			Page 22
Modification	Date	Name	Original		X, R, AKAS II-M, RICO CROWNING			Total pages112

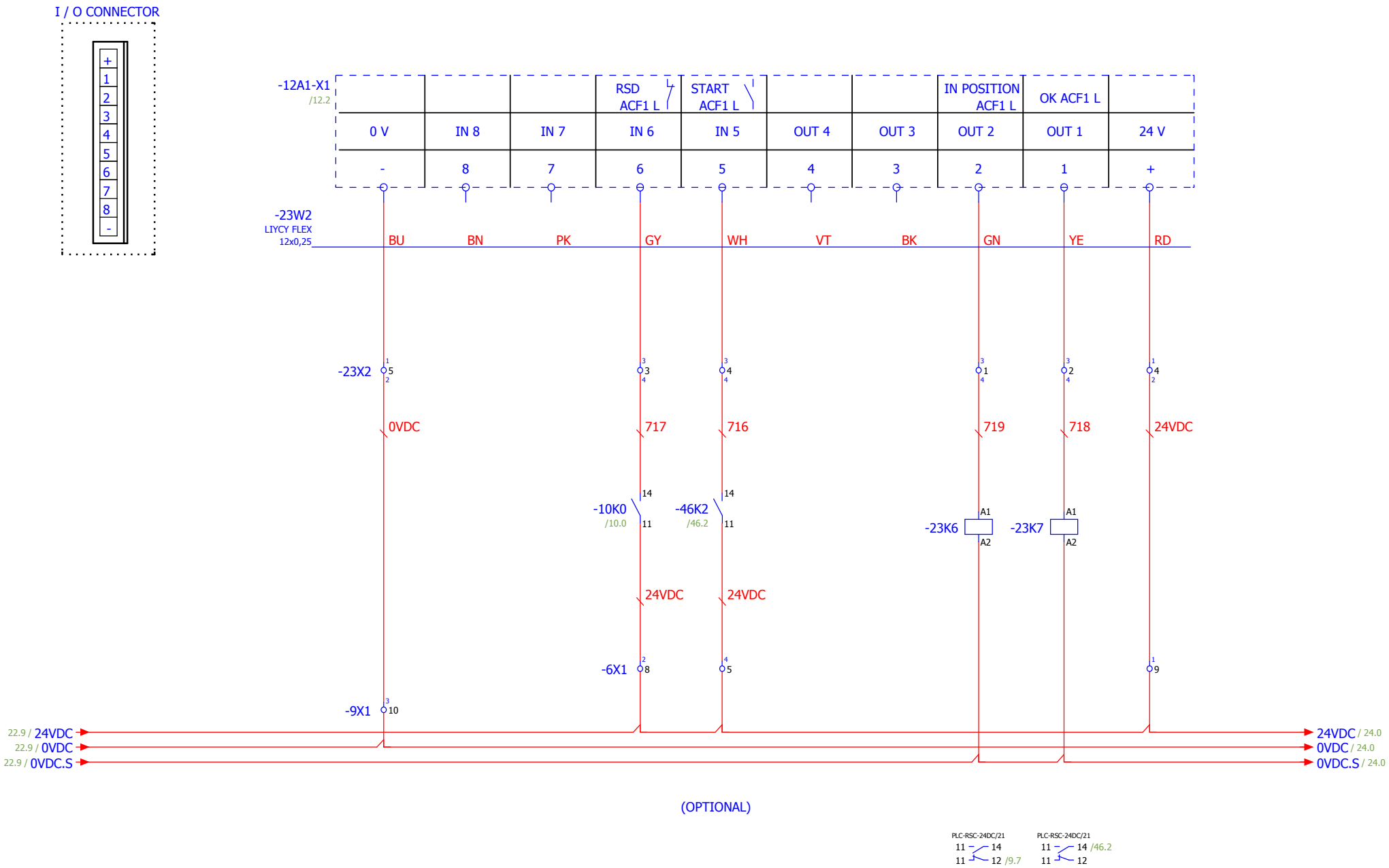

RICO Precision Ideas			Date	21-03-2016	RICO	Module AD4 I/O X1	= EDM	
			Ed.	marcilio.silva			+ MCBN	
			Appr		PRCB 30100 SN2390 DA-66T			Page 23
Modification	Date	Name	Original		X, R, AKAS II-M, RICO CROWNING			Total pages112

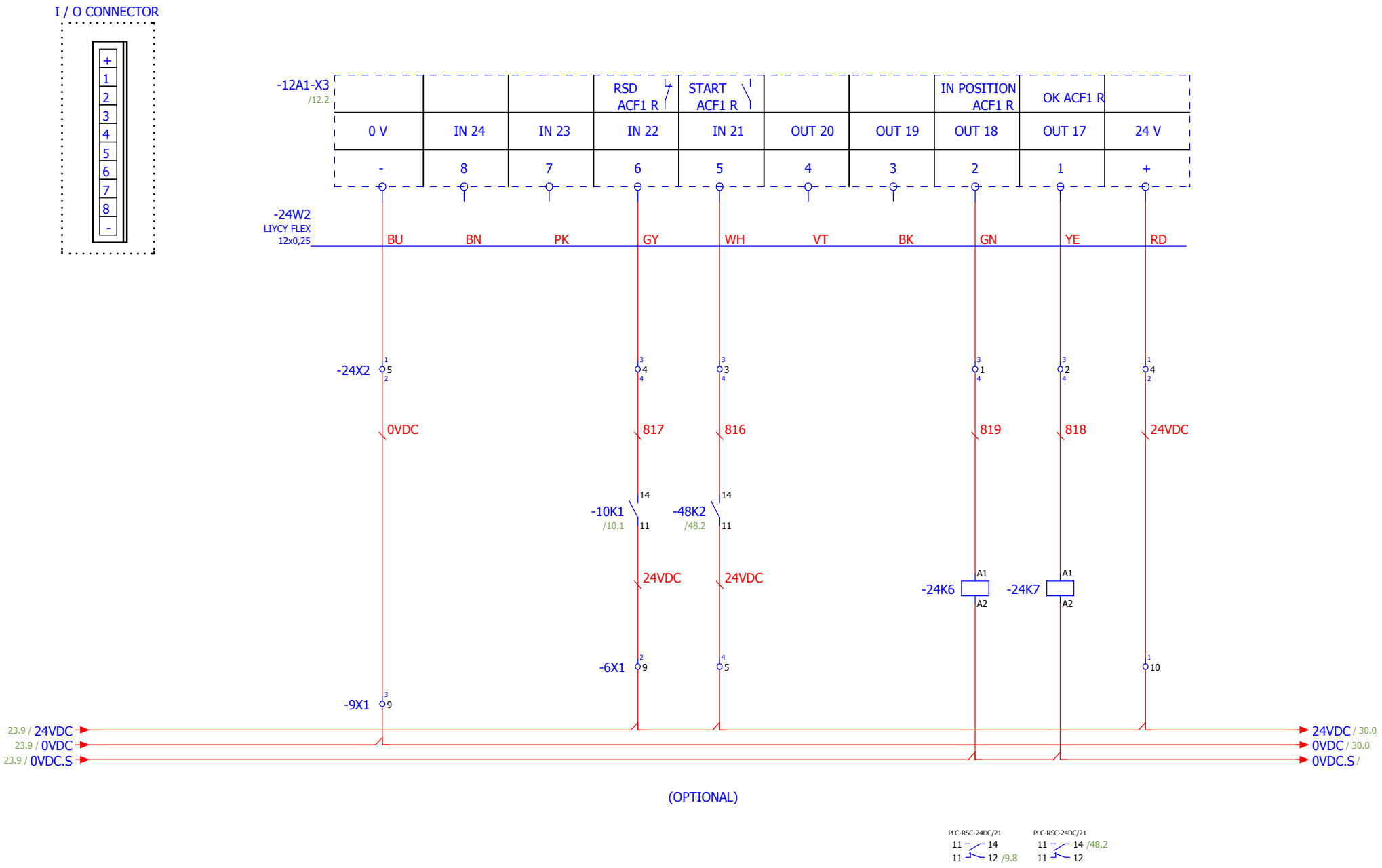

23

25

RICO Precision Ideas			Date	21-03-2016	RICO	Module AD4 I/O X2	= EDM	
			Ed.	marcilio.silva			+ MCBN	
			Appr		PRCB 30100 SN2390 DA-66T			Page 24
Modification	Date	Name	Original		X, R, AKAS II-M, RICO CROWNING			Total pages112

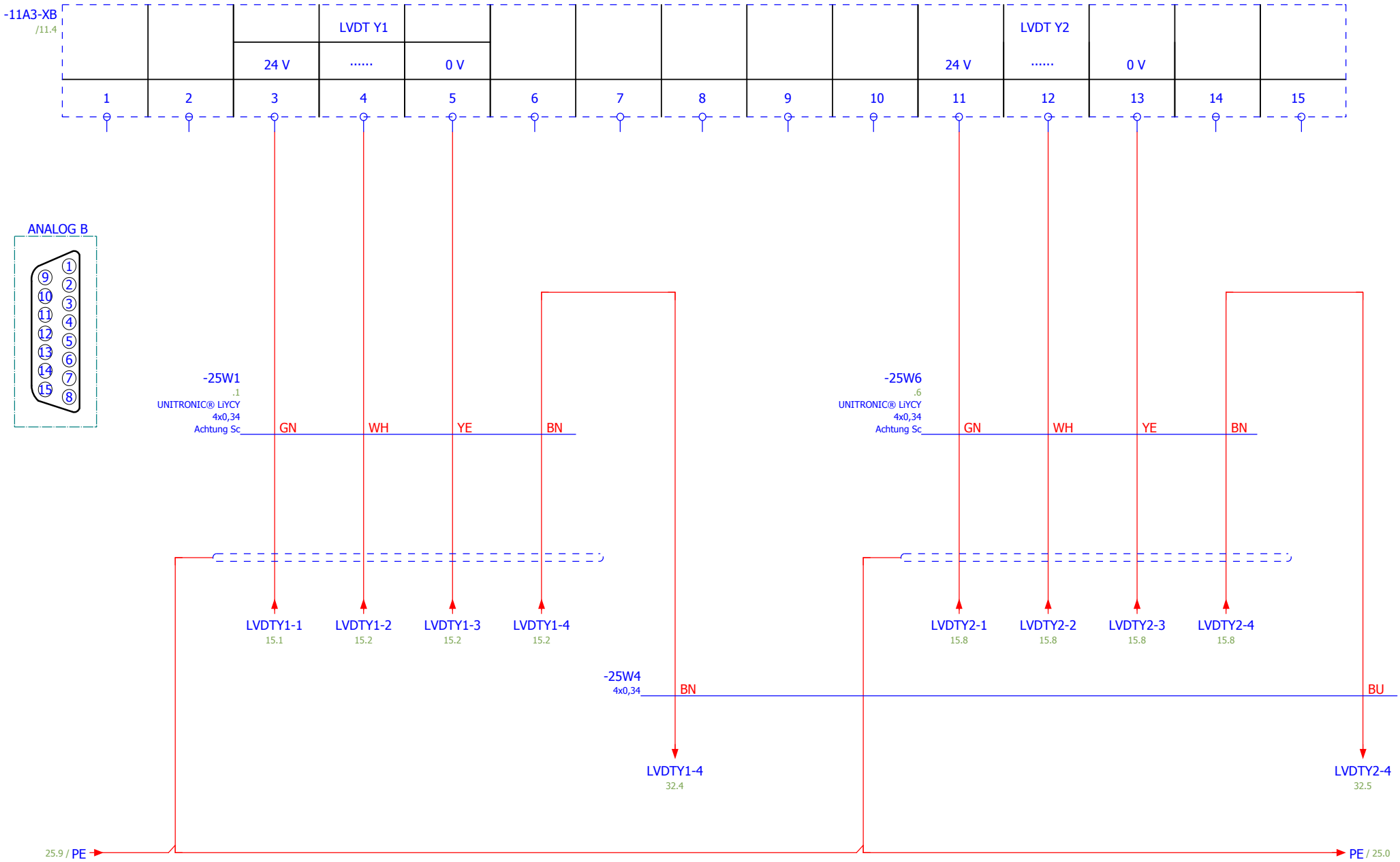

24

26

RICO Precision Ideas			Date	03-03-2016	RICO	Module AD1 Analog B	= EDM	
			Ed.	marcilio.silva			+ MCBN	
			Appr		PRCB 30100 SN2390 DA-66T			Page 25
Modification	Date	Name	Original		X, R, AKAS II-M, RICO CROWNING			Total pages112

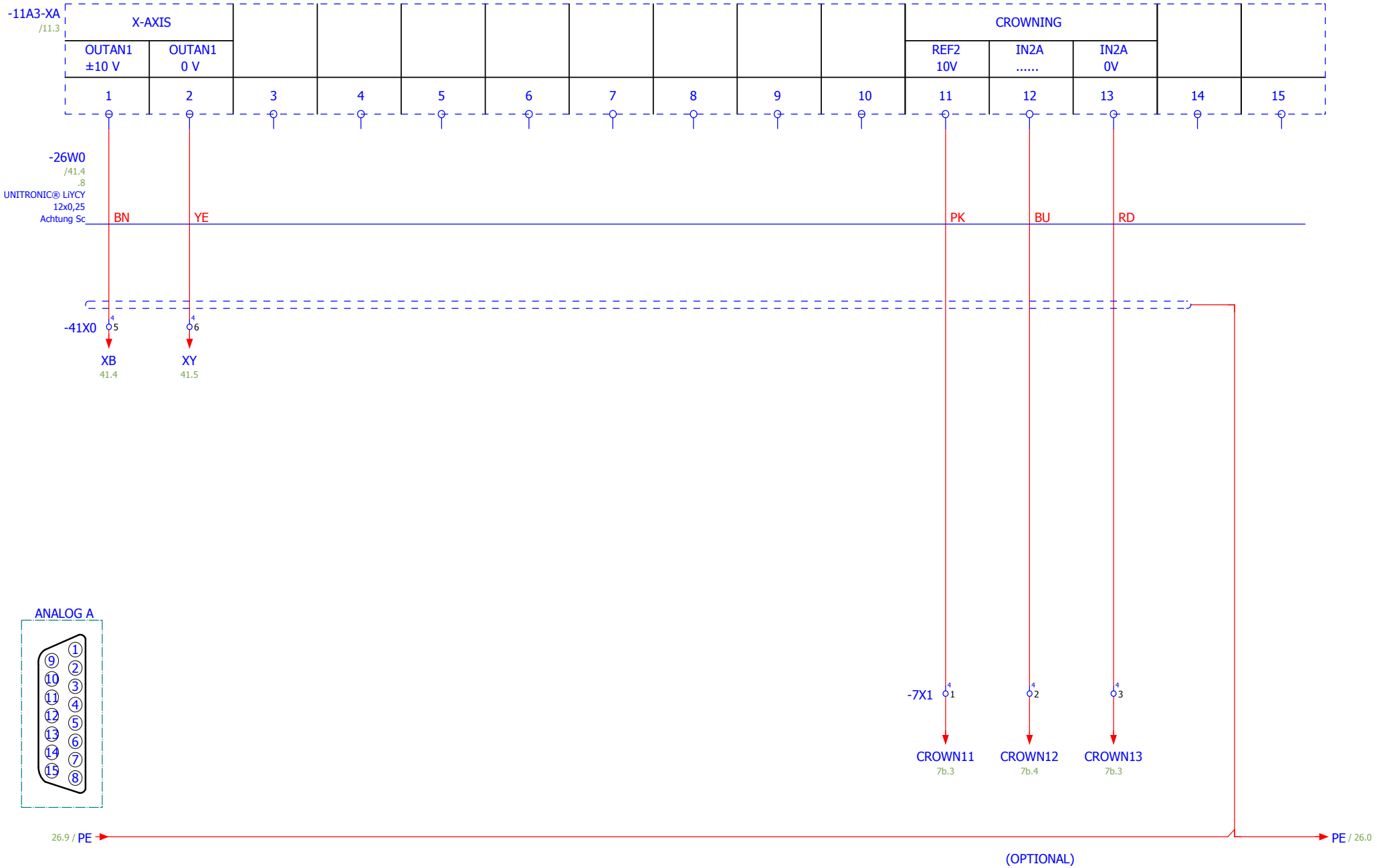

25

27

RICO Precision Ideas			Date	21-03-2016	RICO	Module AD1 Analog A	= EDM	
			Ed.	marcilio.silva			+ MCBN	
			Appr		PRCB 30100 SN2390 DA-66T			Page 26
Modification	Date	Name	Original		X, R, AKAS II-M, RICO CROWNING			Total pages112

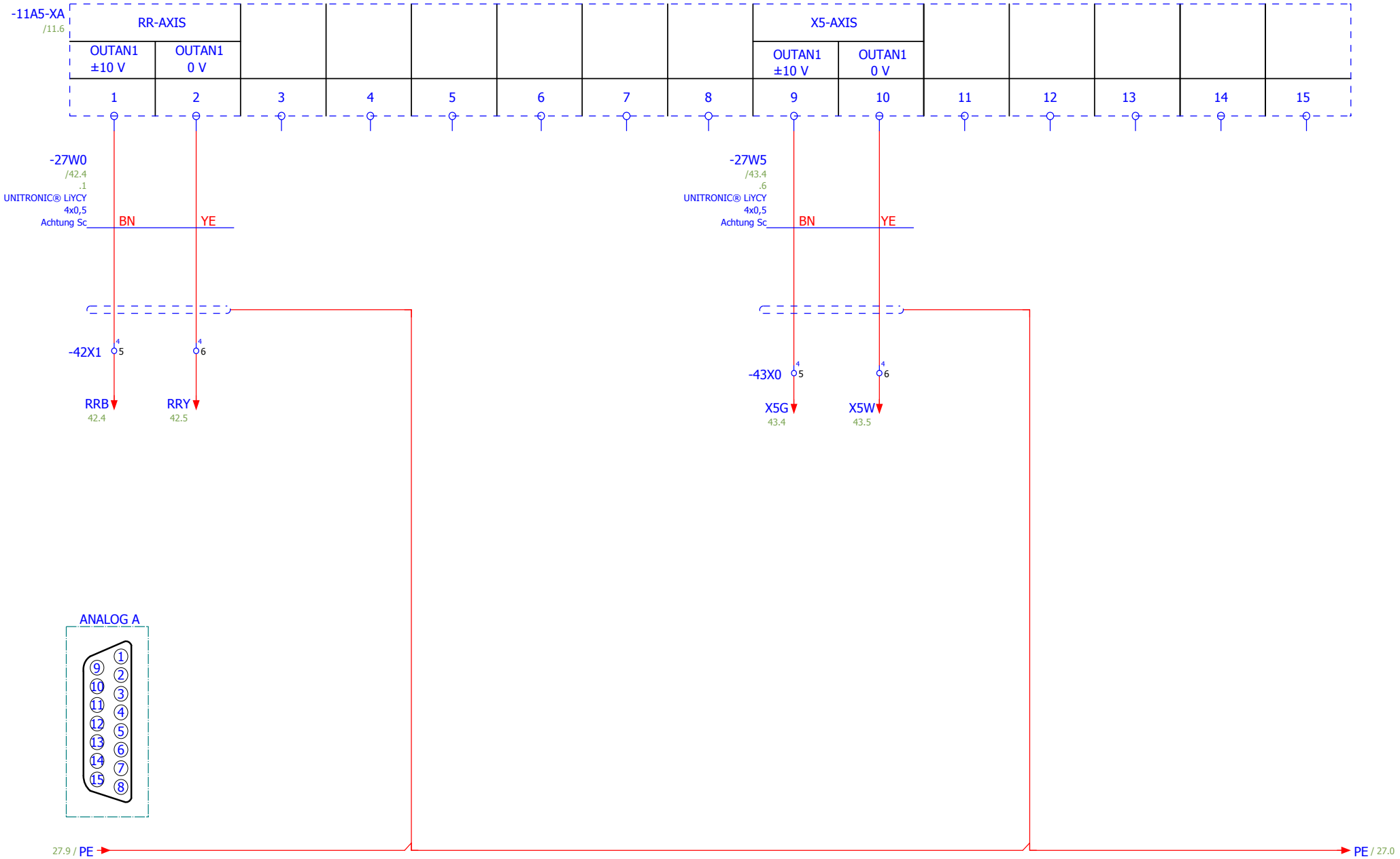

(OPTIONAL)

26

28

RICO Precision Ideas			Date	21-03-2016	RICO	Module AD2 Analog A	= EDM	
			Ed.	marcilio.silva			+ MCBN	
			Appr		PRCB 30100 SN2390 DA-66T			Page 27
Modification	Date	Name	Original		X, R, AKAS II-M, RICO CROWNING			Total pages112

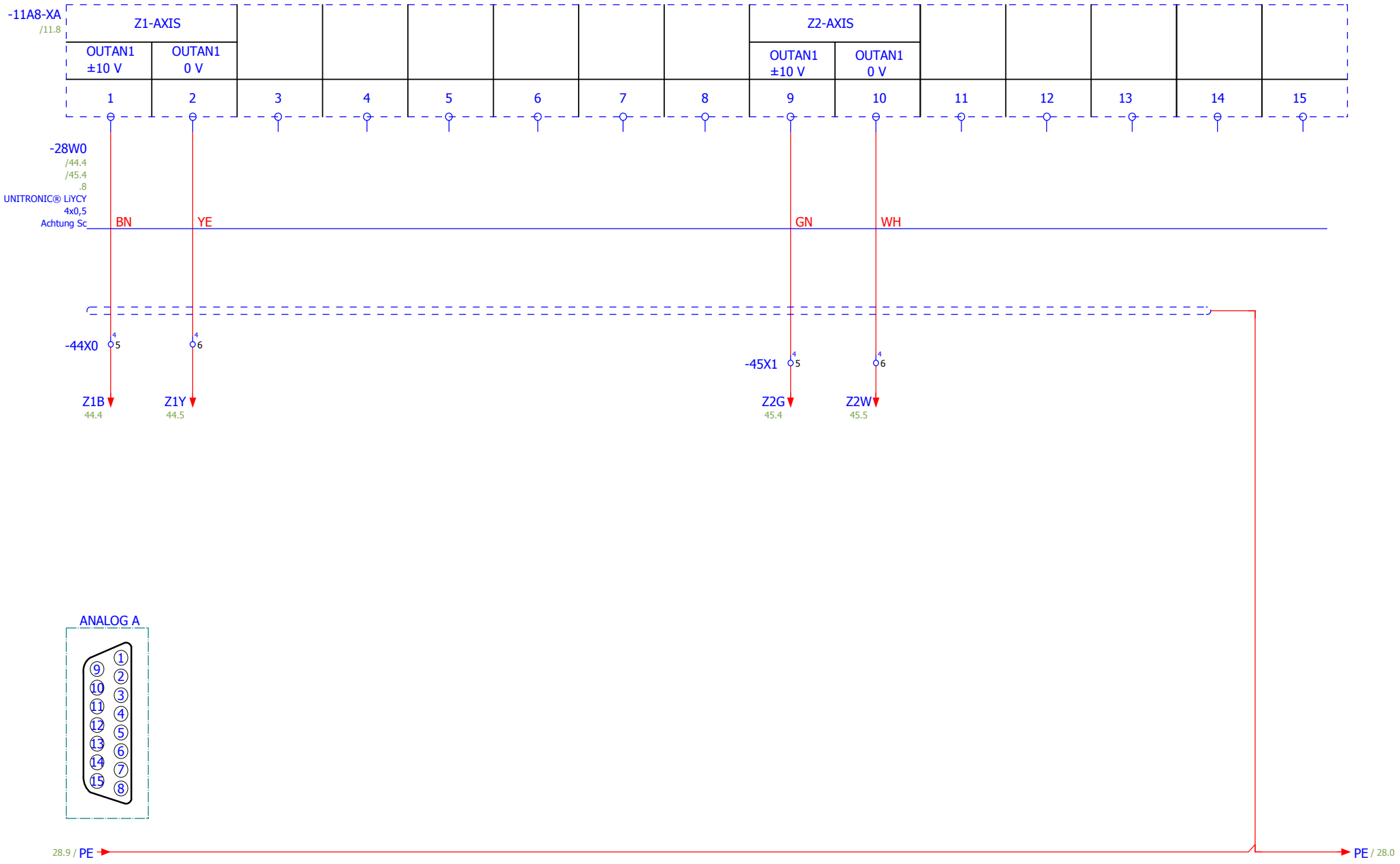

(OPTIONAL)

RICO Precision Ideas			Date	21-03-2016	RICO	Module AD3 Analog A	= EDM	
			Ed.	marcilio.silva			+ MCBN	
			Appr		PRCB 30100 SN2390 DA-66T			Page 28
	Modification	Date	Name	Original	X, R, AKAS II-M, RICO CROWNING			Total pages112

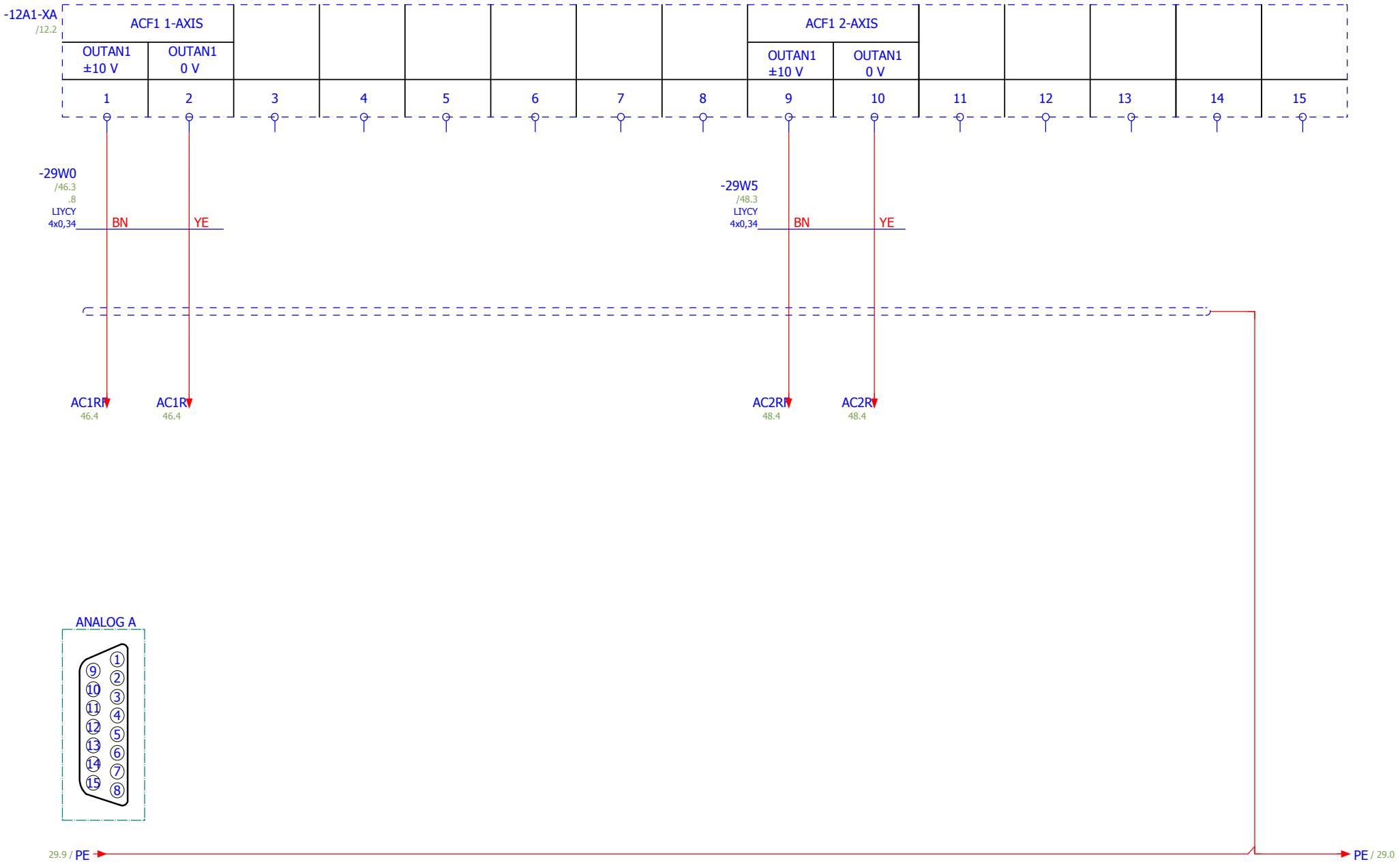

(OPTIONAL)

RICO Precision Ideas			Date	21-03-2016	RICO	Module AD4 Analog A	= EDM	
			Ed.	marcilio.silva			+ MCBN	
			Appr		PRCB 30100 SN2390 DA-66T			Page 29
Modification	Date	Name	Original		X, R, AKAS II-M, RICO CROWNING			Total pages112

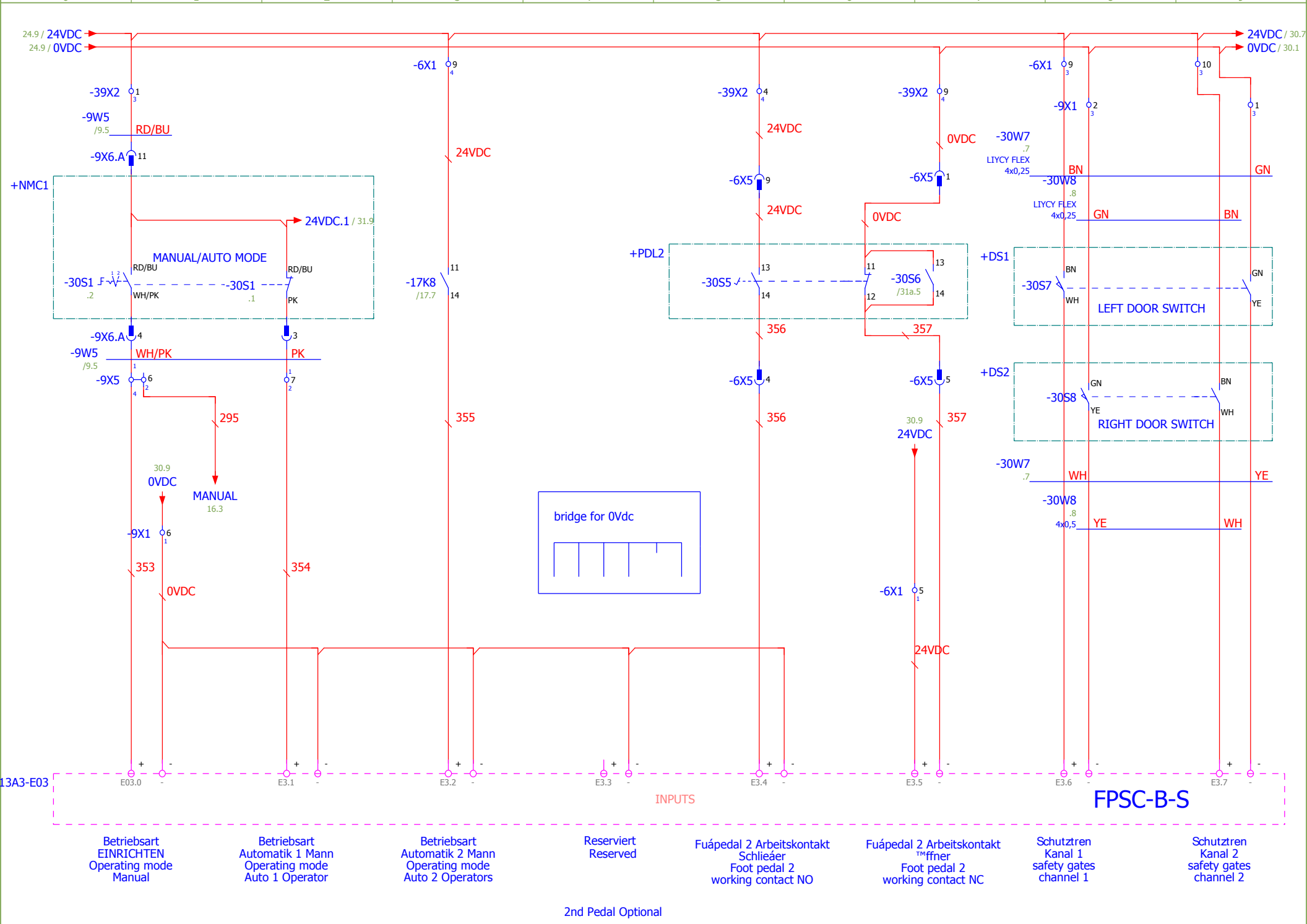

RICO Precision Ideas			Date	21-03-2016	RICO	FPSC-E03	= EDM	
			Ed.	marcilio.silva			+ MCBN	
			Appr		PRCB 30100 SN2390 DA-66T			Page 30
Modification	Date	Name	Original		X, R, AKAS II-M, RICO CROWNING			Total pages112

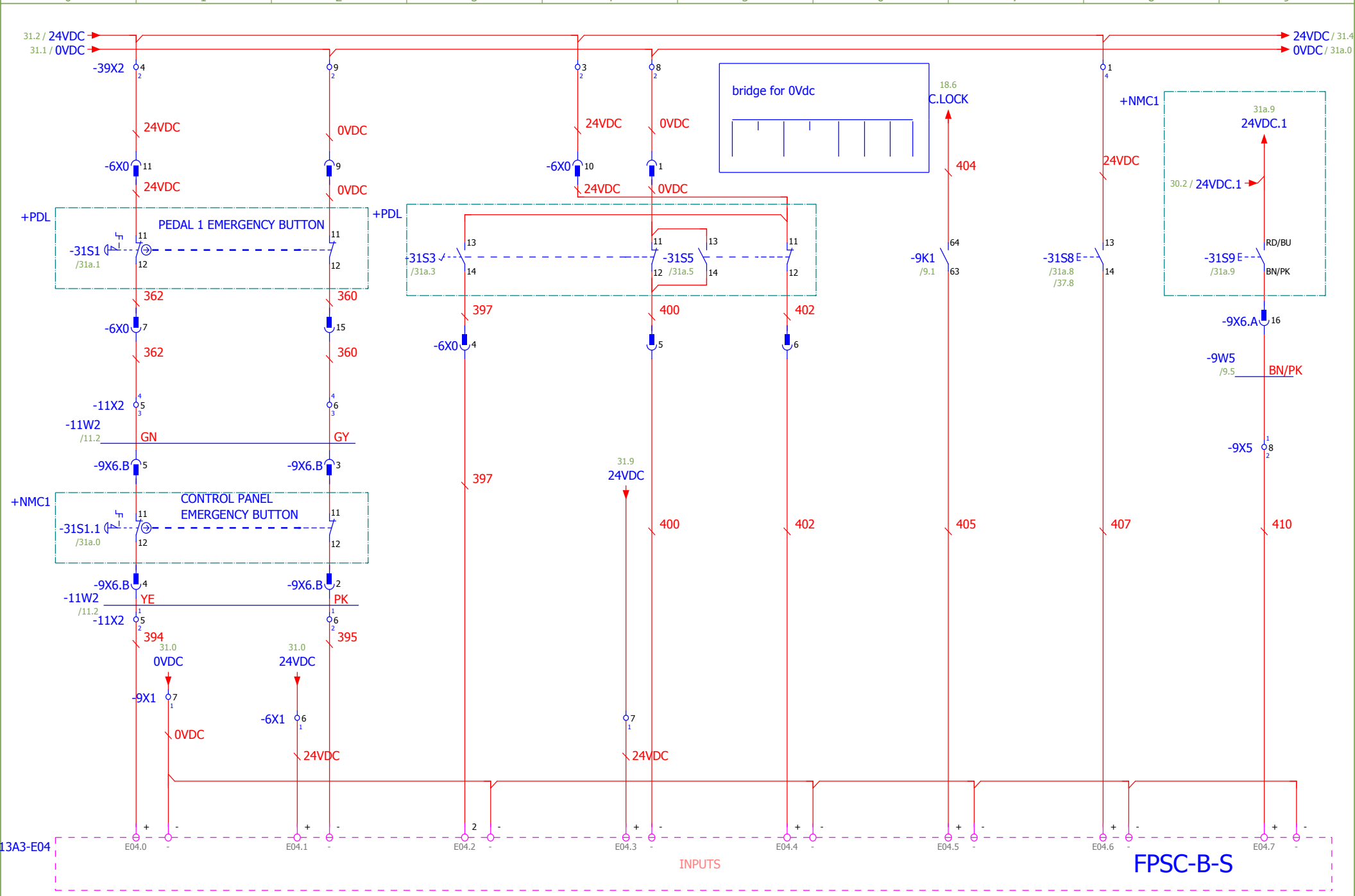

30

31a

RICO Precision Ideas			Date	21-03-2016	RICO	FPSC-E04	= EDM
			Ed.	marcilio.silva			+ MCBN
			Appr		PRCB 30100 SN2390 DA-66T		Page 31
Modification	Date	Name	Original		X, R, AKAS II-M, RICO CROWNING		Total pages112

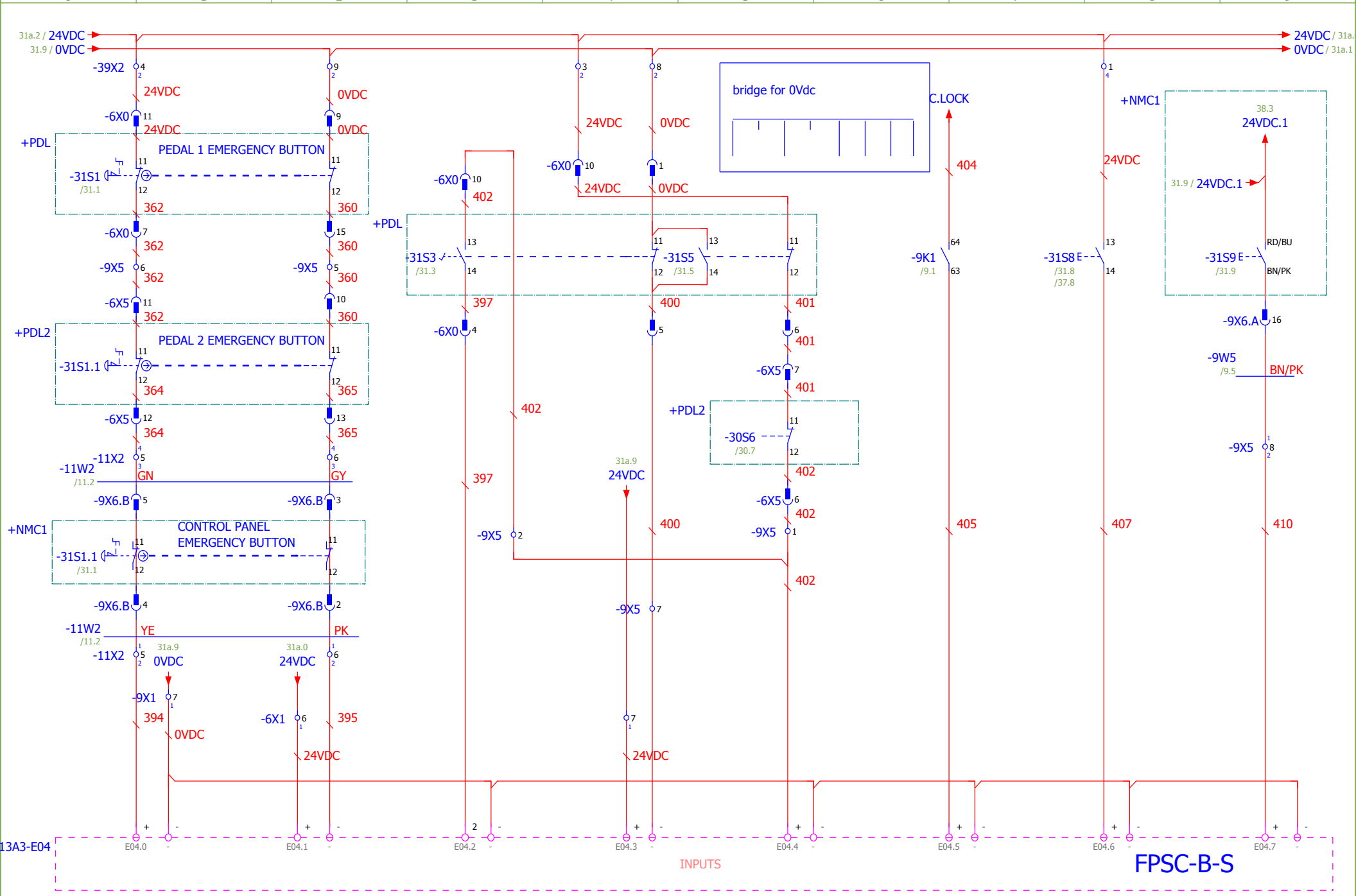

RICO Precision Ideas			Date	21-03-2016	RICO	FPSC-E04	= EDM
			Ed.	marcilio.silva			+ MCBN
			Appr		PRCB 30100 SN2390 DA-66T		Page 31a
Modification	Date	Name	Original		X, R, AKAS II-M, RICO CROWNING		Total pages112

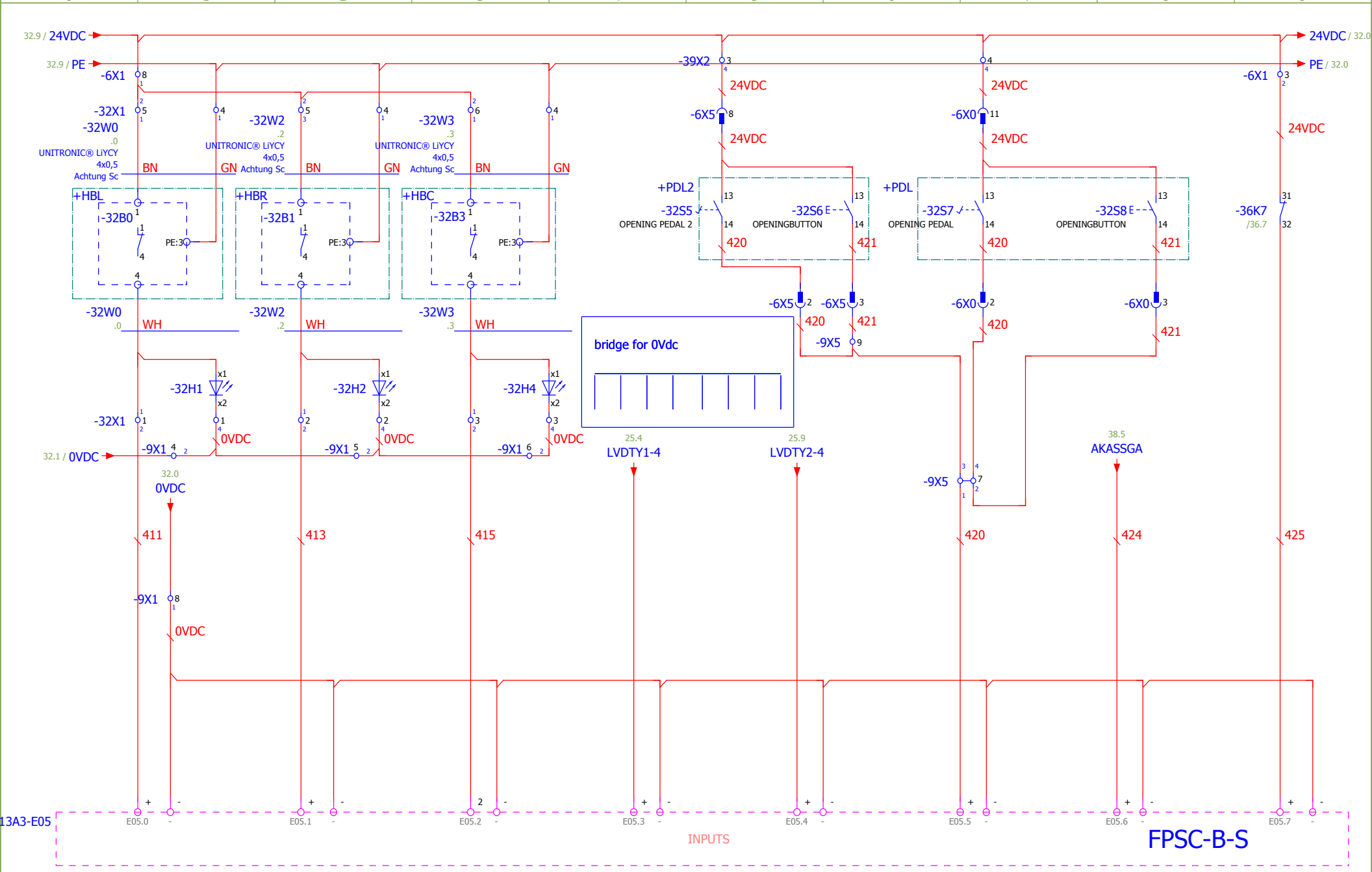

RICO Precision Ideas			Date	21-03-2016	RICO	FPSC-E05	= EDM	
			Ed.	marcilio.silva			+ MCBN	
			Appr		PRCB 30100 SN2390 DA-66T			Page 32
Modification	Date	Name	Original		X, R, AKAS II-M, RICO CROWNING			Total pages112

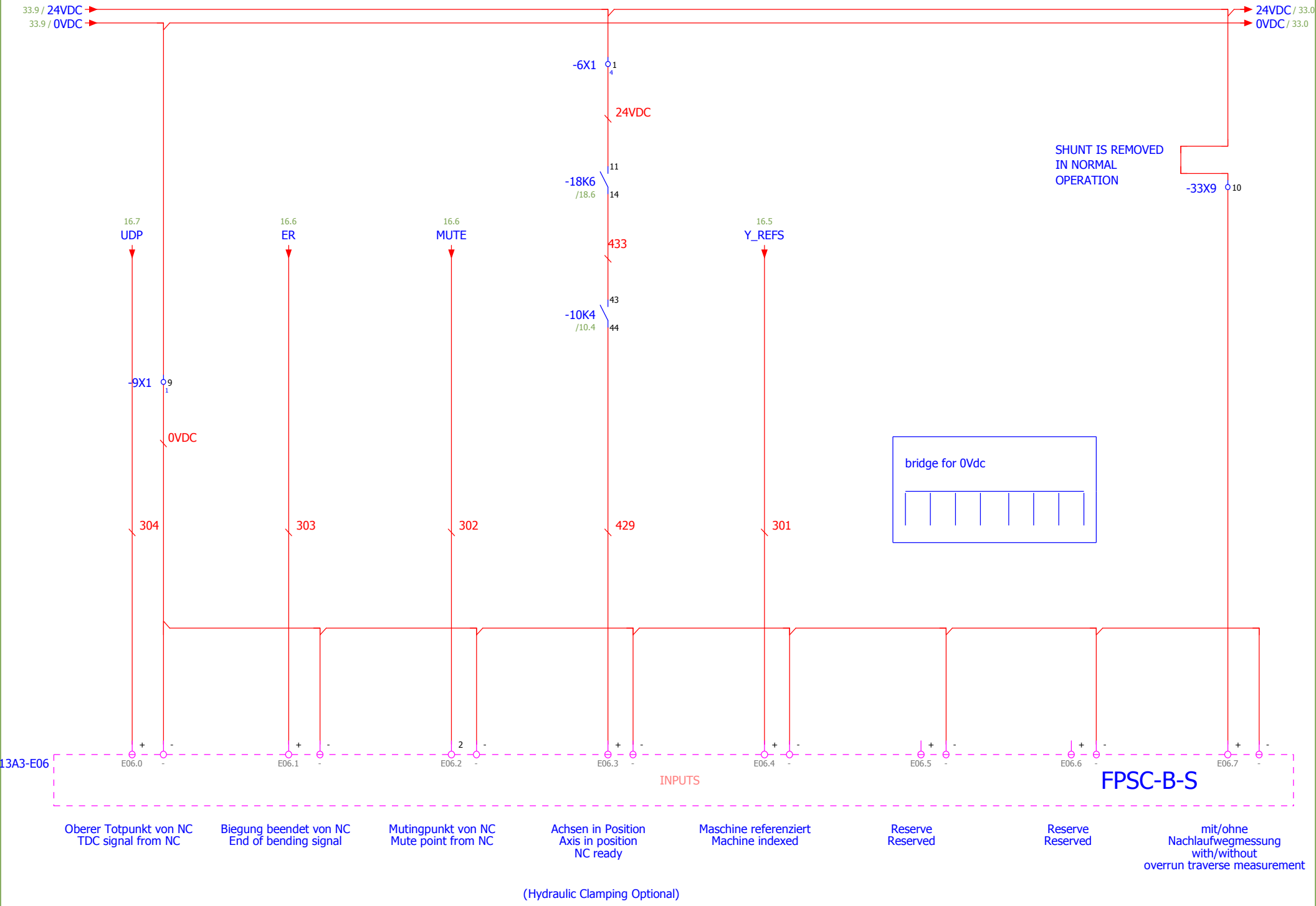

RICO Precision Ideas			Date	21-03-2016	RICO	FPSC-E06	= EDM	
			Ed.	marcilio.silva			+ MCBN	
			Appr		PRCB 30100 SN2390 DA-66T			Page 33
Modification	Date	Name	Original		X, R, AKAS II-M, RICO CROWNING			Total pages112

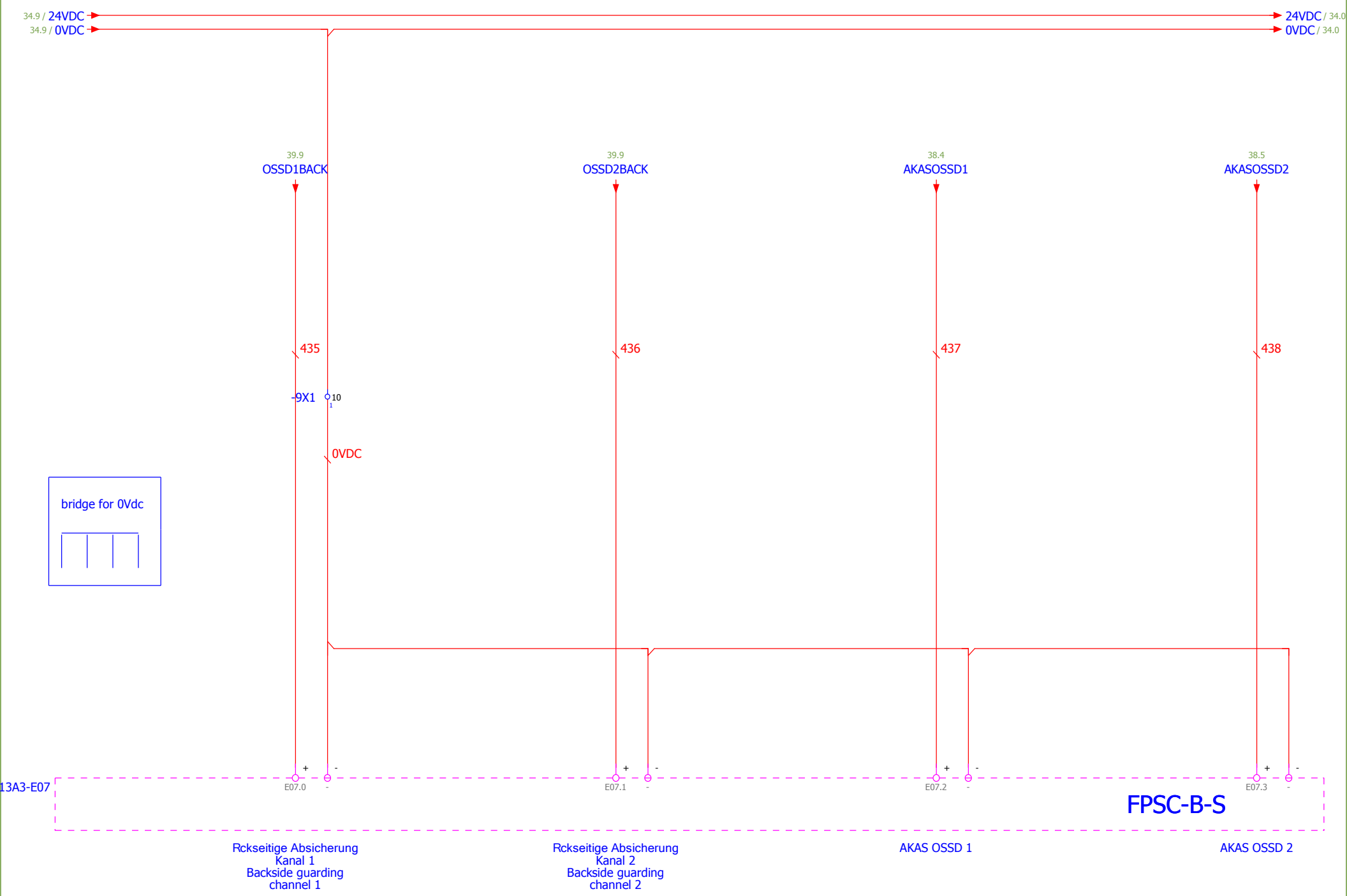

RICO Precision Ideas			Date	21-03-2016	RICO	FPSC-E07	= EDM	
			Ed.	marcilio.silva			+ MCBN	
			Appr		PRCB 30100 SN2390 DA-66T			Page 34
	Modification	Date	Name	Original	X, R, AKAS II-M, RICO CROWNING			Total pages112

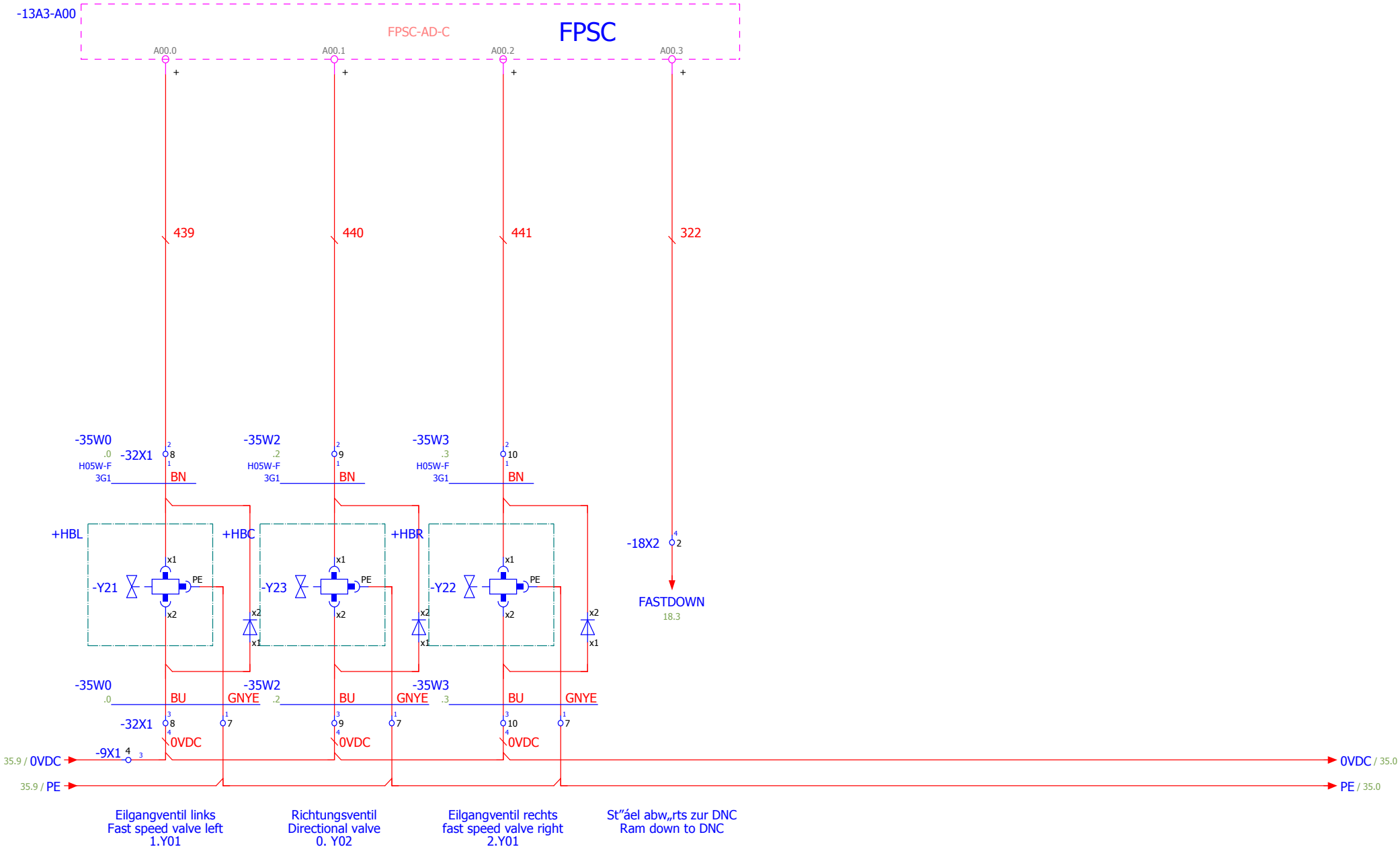

34 36

RICO Precision Ideas			Date	21-03-2016	RICO	FPSC-A00	= EDM	
			Ed.	marcilio.silva			+ MCBN	
			Appr		PRCB 30100 SN2390 DA-66T			Page 35
Modification	Date	Name	Original		X, R, AKAS II-M, RICO CROWNING			Total pages112

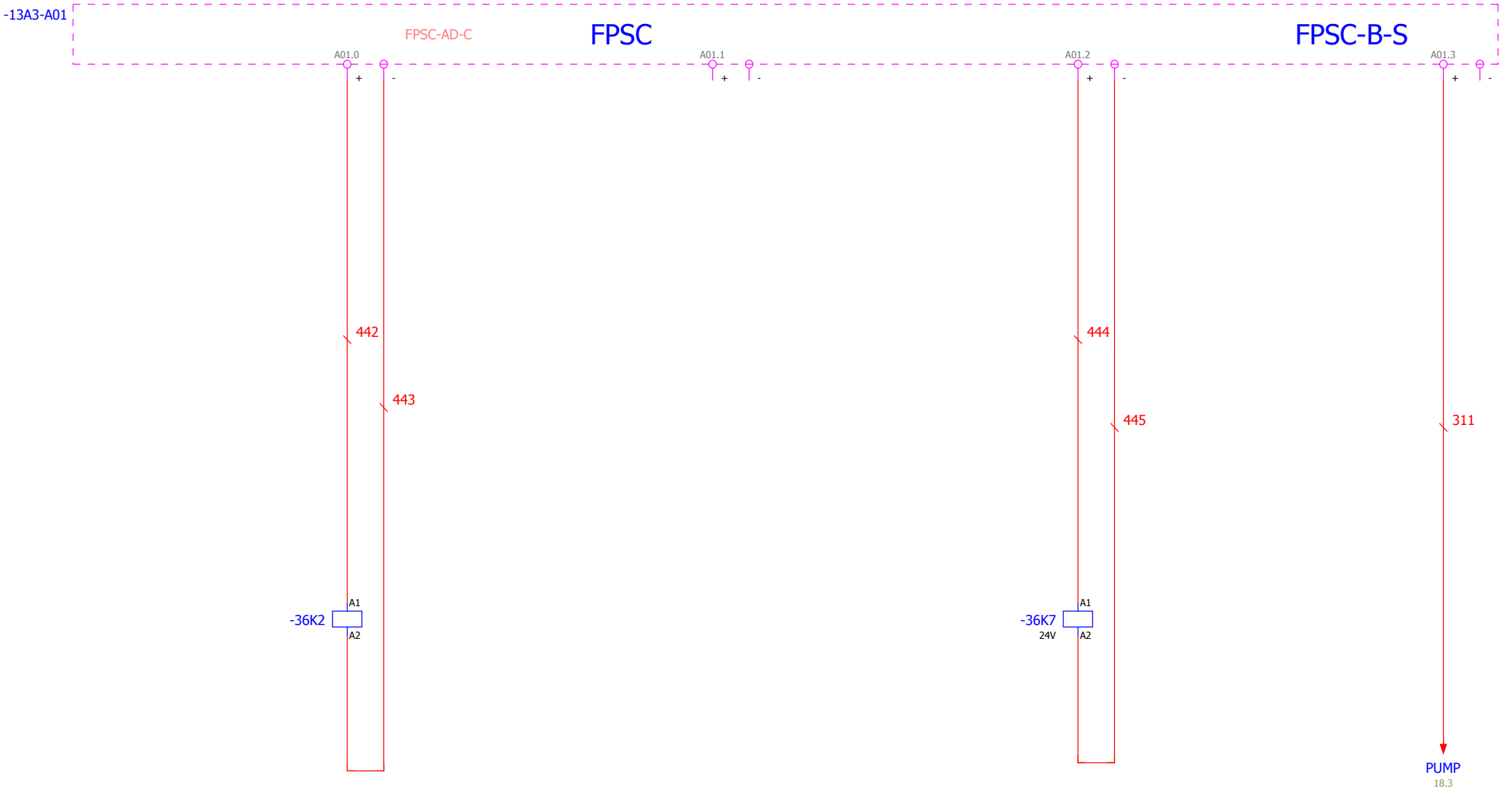

35 37

RICO Precision Ideas			Date	21-03-2016	RICO	FPSC-A01	= EDM
			Ed.	marcilio.silva			+ MCBN
			Appr		PRCB 30100 SN2390 DA-66T		Page 36
Modification	Date	Name	Original		X, R, AKAS II-M, RICO CROWNING		Total pages112

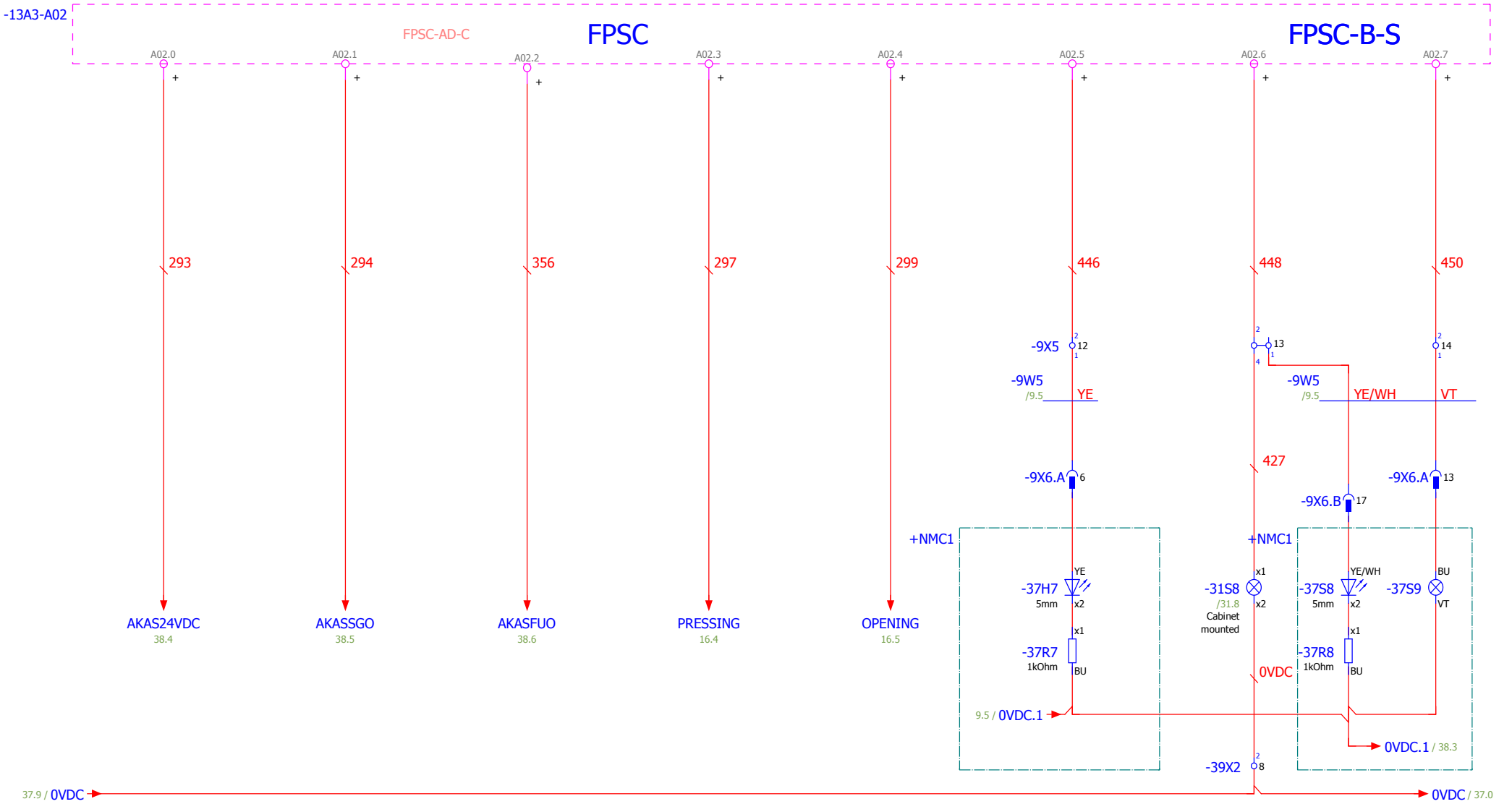

AKAS 24V Versorgungsspannung
AKAS 24V power supply

AKAS SGO Signal

AKAS FUO Signal

Schleichganganforderung an NC
Slow speed request to NC

Befehl St"áel auf an NC
Beam open command to CN

Meldeleuchte
Nachlaufwegmessung aktiv/ok
Indicator overrun
traverse measurement active/ok

Quittierung hintere Schutzabsicherung
Restart backside guarding

Quittierung Not-Halt
Restart Emergency Stop

Laser Ok

RICO Precision Ideas			Date	21-03-2016	RICO	FPSC-A02	= EDM	
			Ed.	marcilio.silva			+ MCBN	
			Appr		PRCB 30100 SN2390 DA-66T			Page 37
Modification	Date	Name	Original		X, R, AKAS II-M, RICO CROWNING			Total pages112

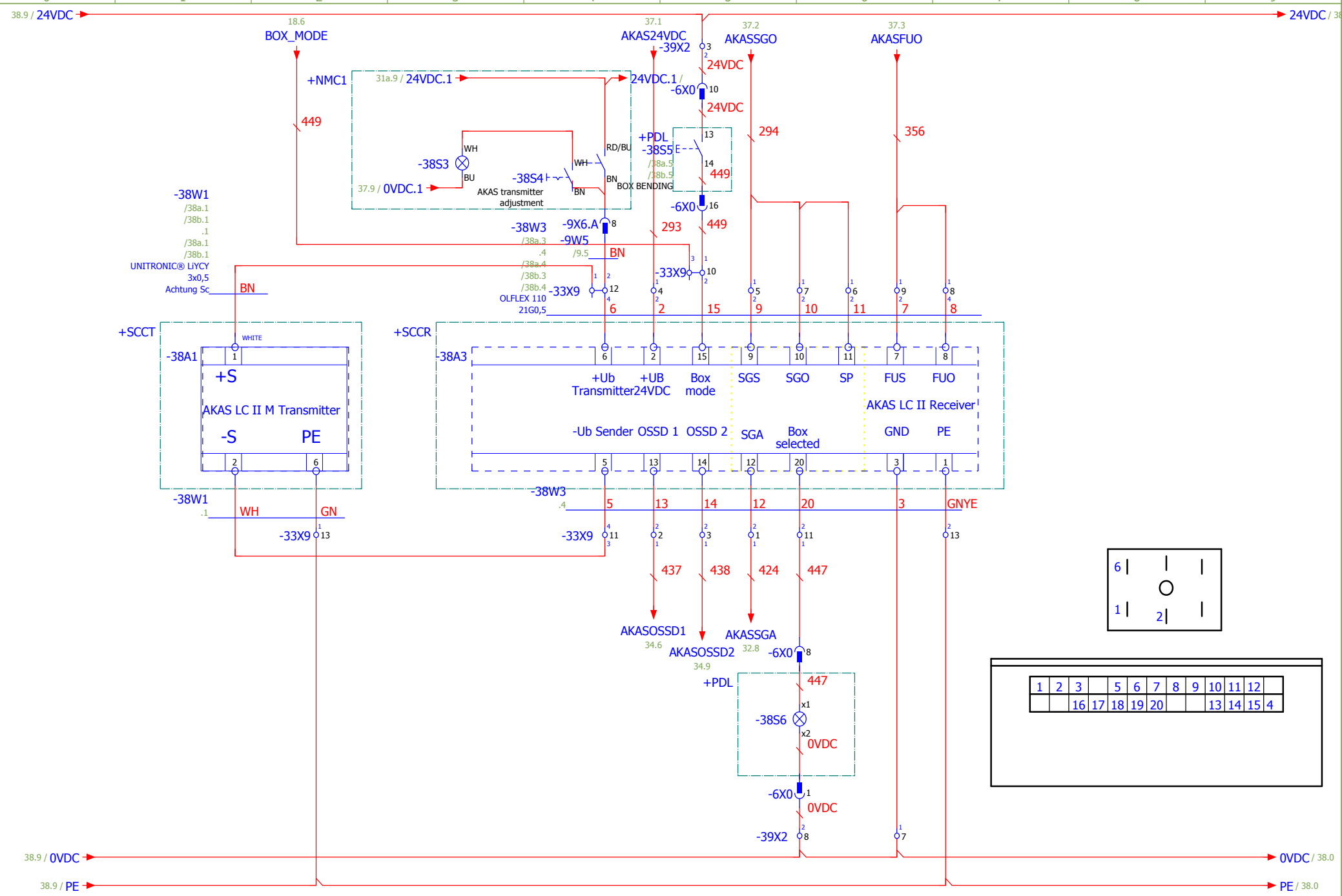

1	2	3		5	6	7	8	9	10	11	12	
		16	17	18	19	20			13	14	15	4

Modification	Date	Name	Date	21-03-2016	RICO	FPSC-AKAS 2 M	= EDM
			Ed.	marcilio.silva			+ MCBN
			Appr		PRCB 30100 SN2390 DA-66T		Page 38
			Original		X, R, AKAS II-M, RICO CROWNING		Total pages112

RICO Precision Ideas

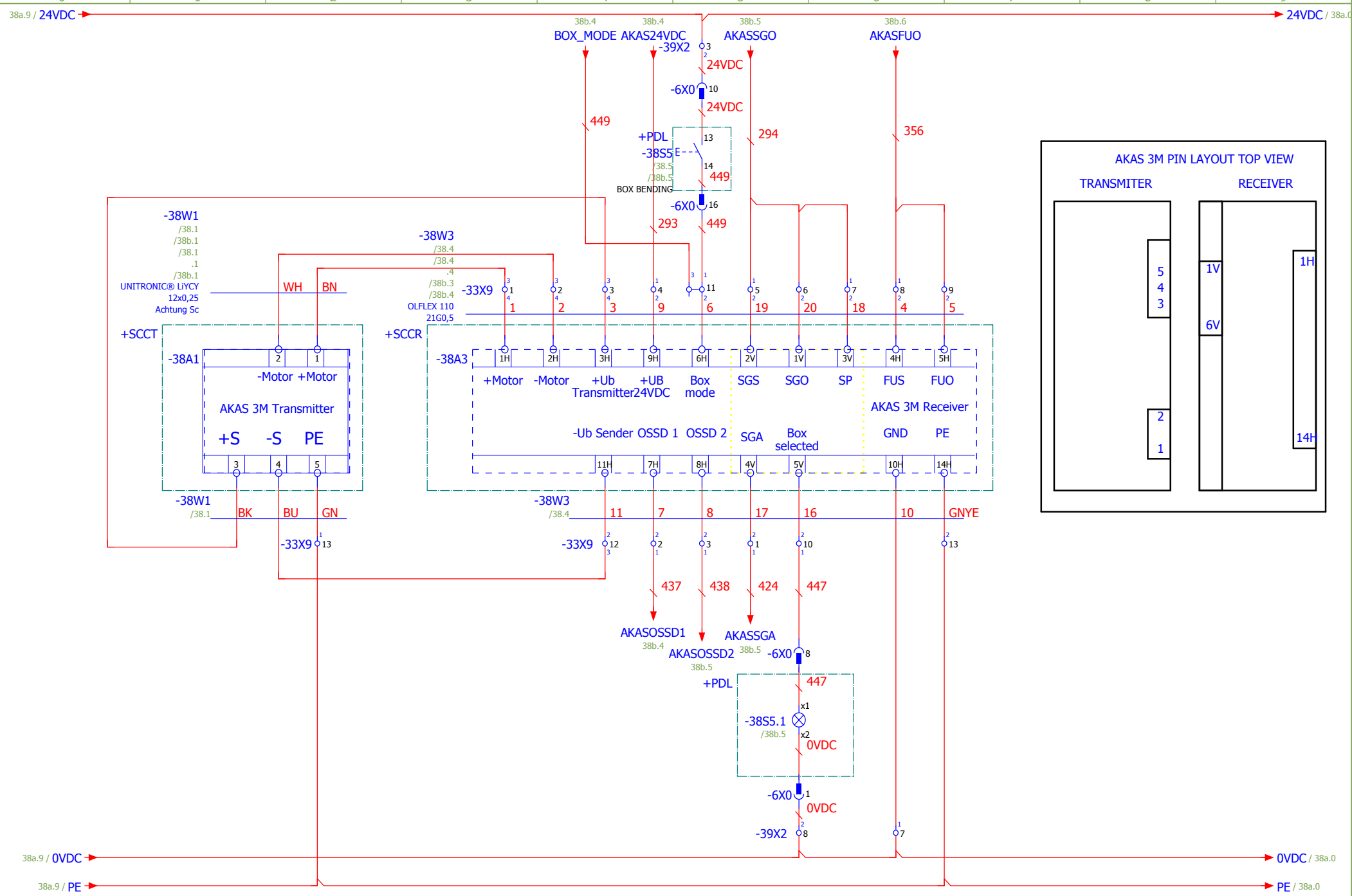

38

38b

RICO Precision Ideas			Date	29-04-2016	RICO	FPSC-AKAS 3 M	= EDM	
			Ed.	marcilio.silva			+ MCBN	
			Appr		PRCB 30100 SN2390 DA-66T			Page 38a
Modification	Date	Name	Original		X, R, AKAS II-M, RICO CROWNING			Total pages112

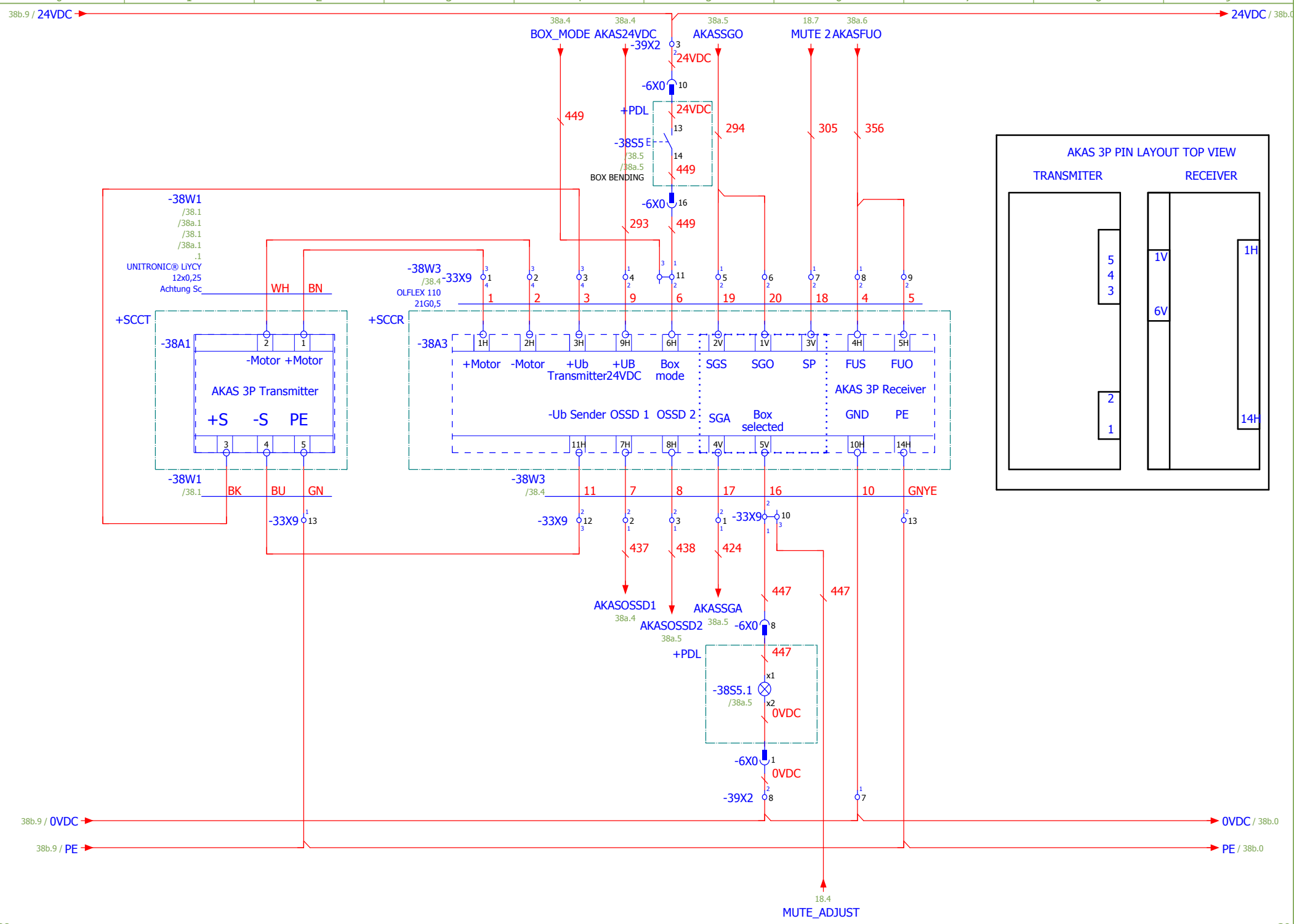

38a

39

RICO Precision Ideas				Date	29-04-2016	RICO	FPSC-AKAS 3 P	= EDM
				Ed.	marcilio.silva			+ MCBN
				Appr		PRCB 30100 SN2390 DA-66T		Page 38b
Modification	Date	Name		Original		X, R, AKAS II-M, RICO CROWNING		Total pages112

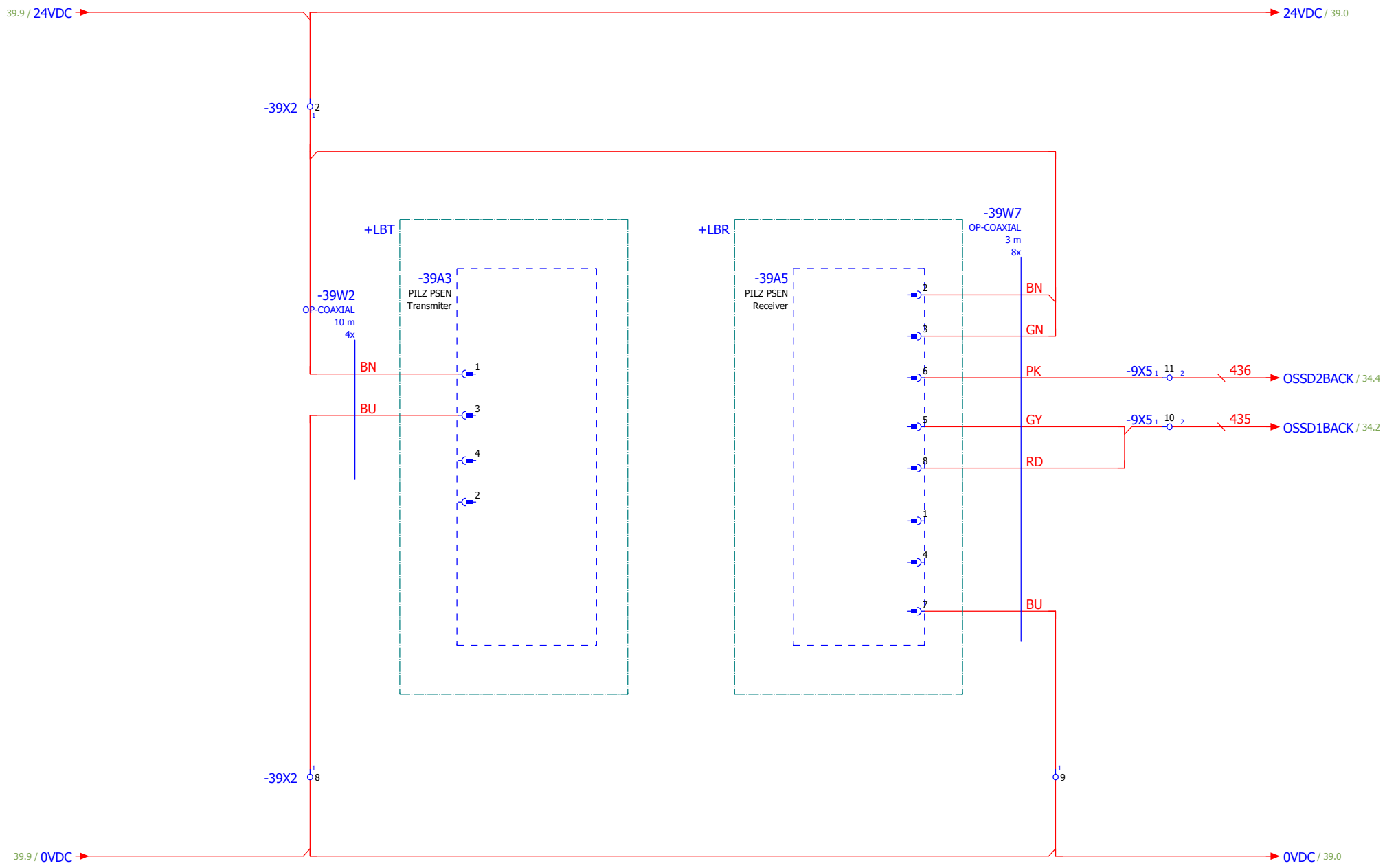

38b

40

RICO Precision Ideas				Date	21-03-2016	RICO	SAFETY LIGHT BARRIER	= EDM
				Ed.	marcilio.silva			+ MCBN
				Appr		PRCB 30100 SN2390 DA-66T		Page 39
	Modification	Date	Name	Original		X, R, AKAS II-M, RICO CROWNING		Total pages112

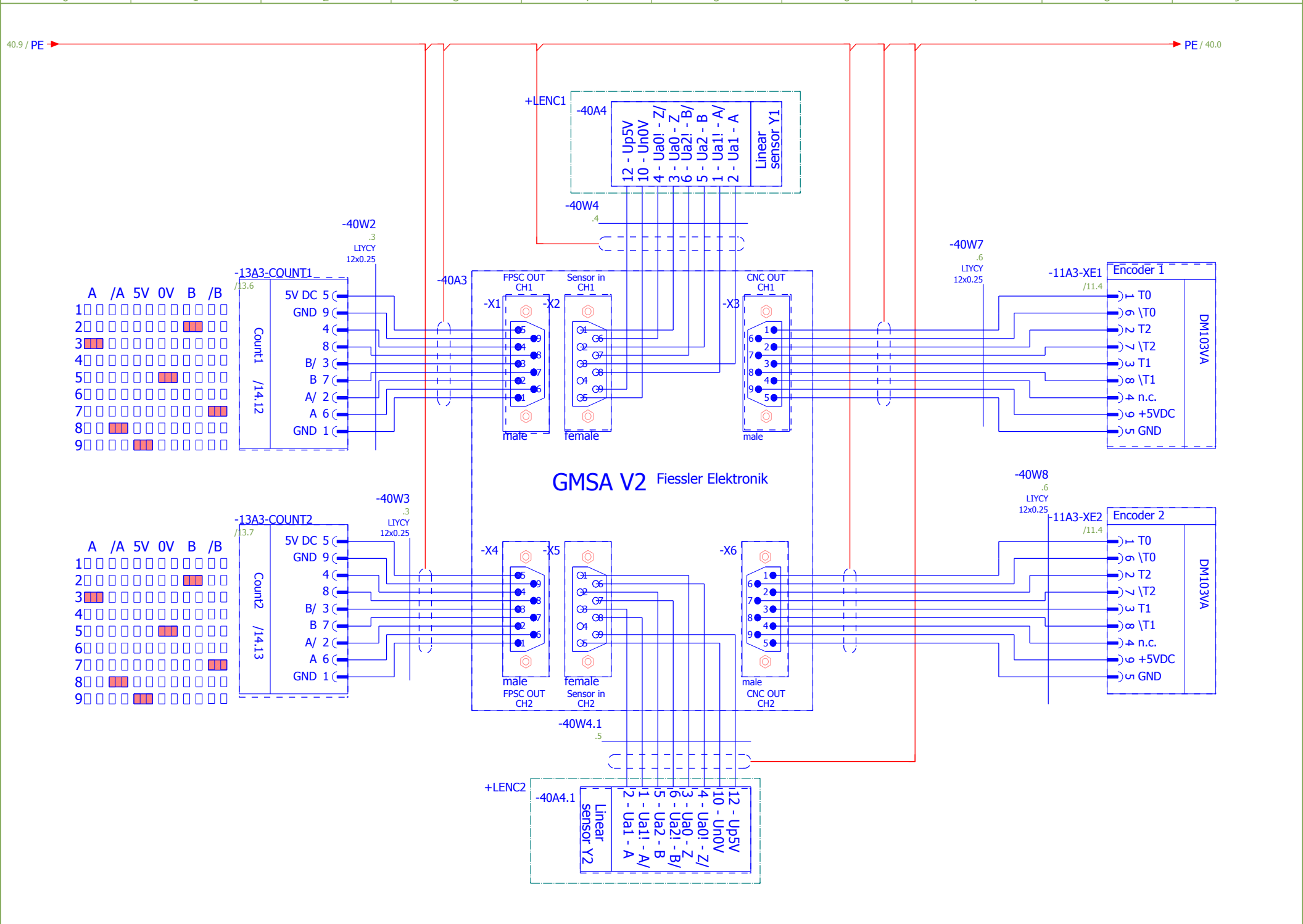

39

41

RICO Precision Ideas				Date	03-03-2016	RICO	FPSC-ENCODERS	= EDM
				Ed.	marcilio.silva			+ MCBN
				Appr		PRCB 30100 SN2390 DA-66T		Page 40
	Modification	Date	Name	Original		X, R, AKAS II-M, RICO CROWNING		Total pages112

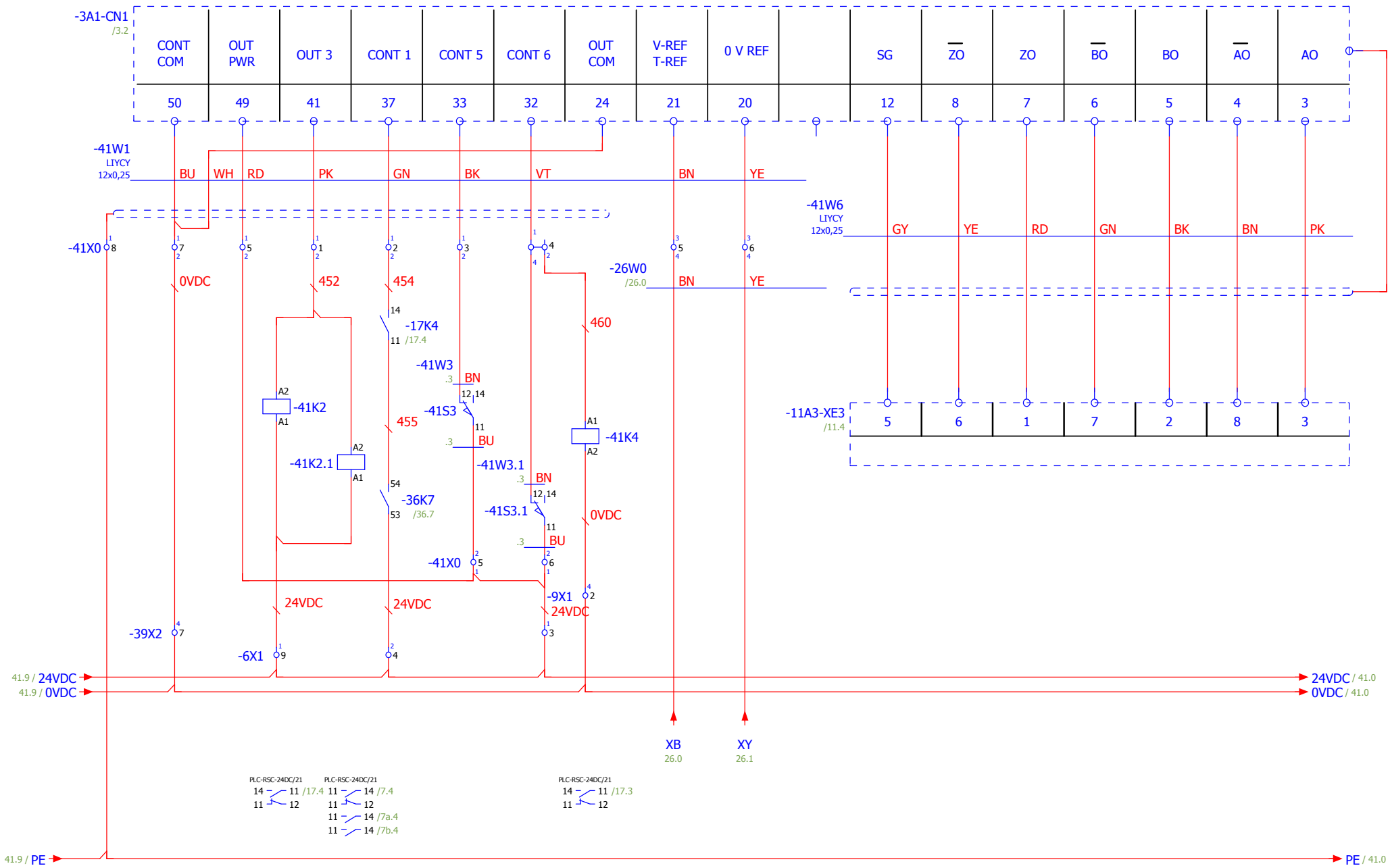

40

42

RICO Precision Ideas			Date	21-03-2016	RICO	XX-AXIS CN1-DA103VA	= EDM	
			Ed.	marcilio.silva			+ MCBN	
			Appr		PRCB 30100 SN2390 DA-66T			Page 41
Modification	Date	Name	Original		X, R, AKAS II-M, RICO CROWNING			Total pages112

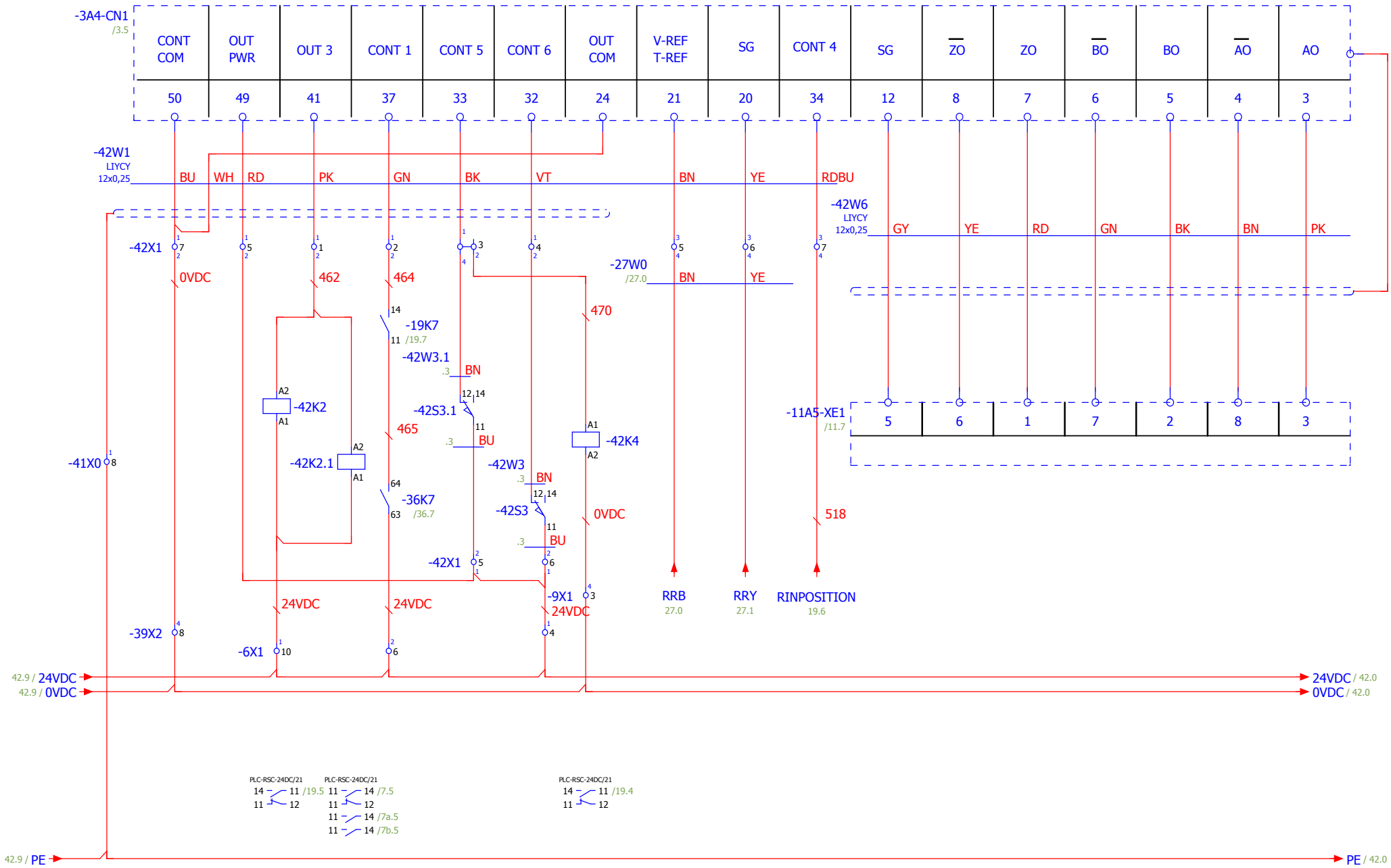

41

43

RICO Precision Ideas			Date	21-03-2016	RICO	RR-AXIS CN1-DA102	= EDM	
			Ed.	marcilio.silva			+ MCBN	
			Appr		PRCB 30100 SN2390 DA-66T			Page 42
Modification	Date	Name	Original		X, R, AKAS II-M, RICO CROWNING			Total pages112

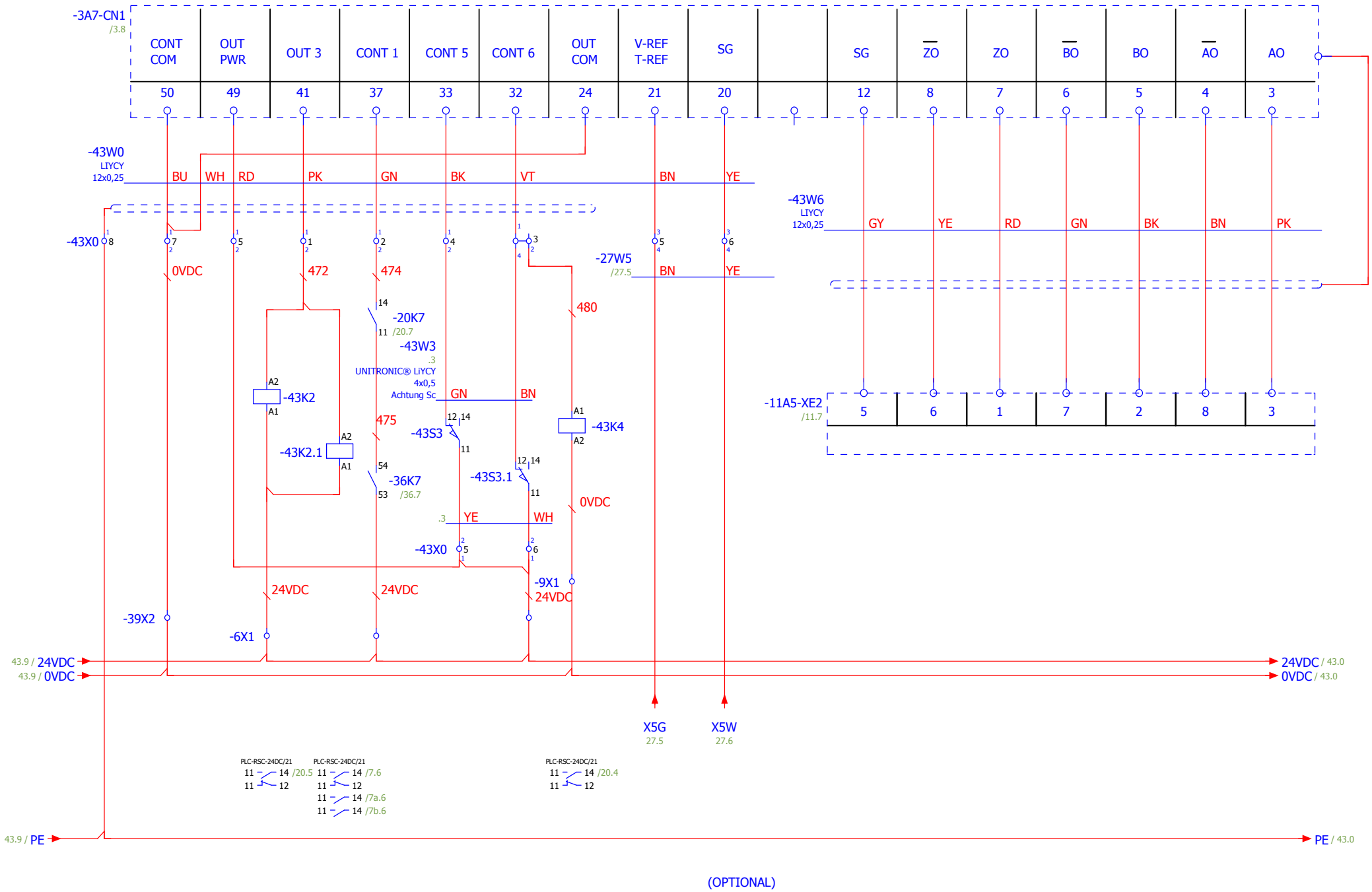

42

44

RICO Precision Ideas			Date	21-03-2016	RICO	X5-AXIS CN1-DA102	= EDM	
			Ed.	marcilio.silva			+ MCBN	
			Appr		PRCB 30100 SN2390 DA-66T			Page 43
Modification	Date	Name	Original		X, R, AKAS II-M, RICO CROWNING			Total pages112

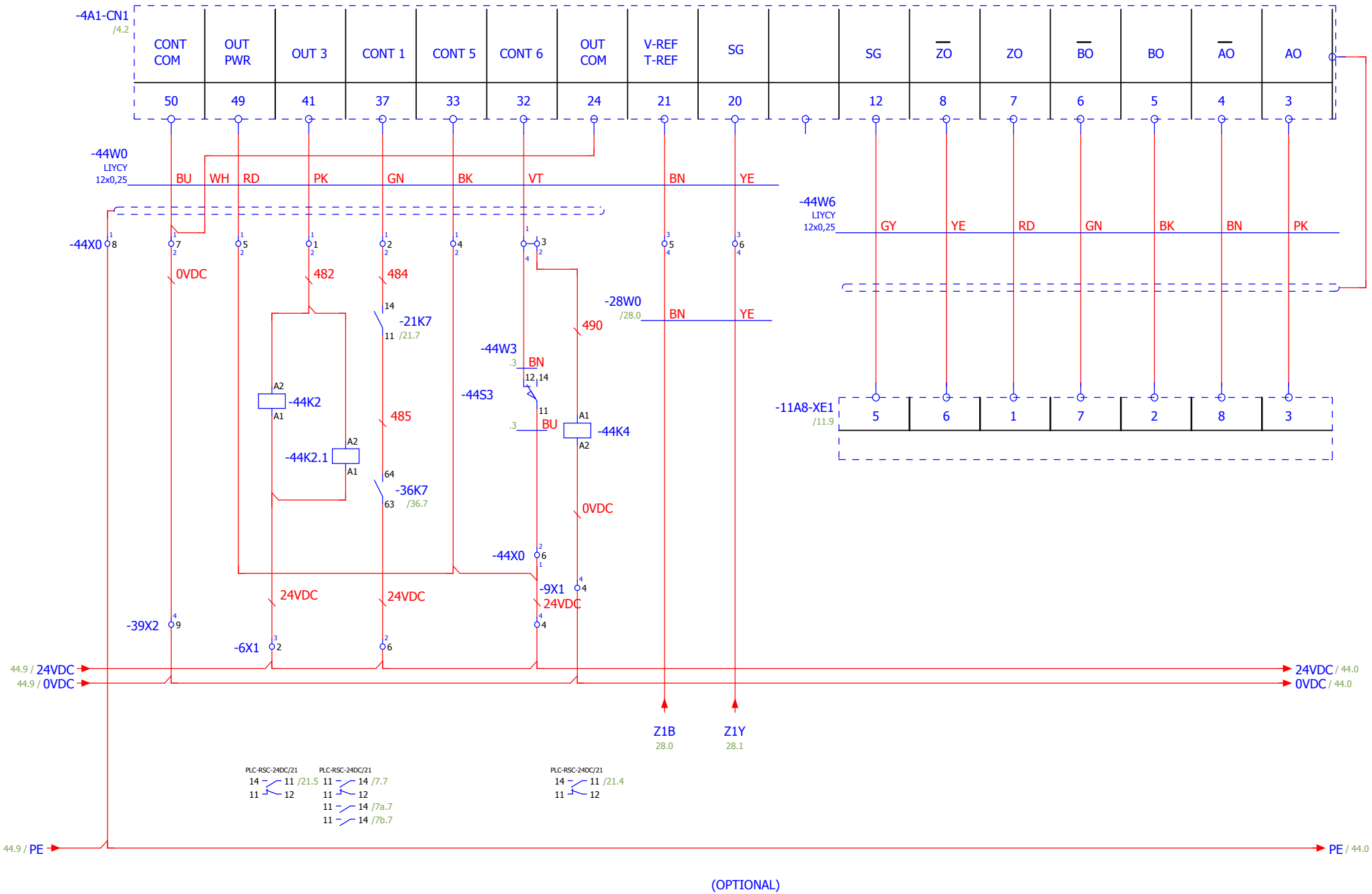

43

45

RICO Precision Ideas			Date	21-03-2016	RICO	Z1-AXIS CN1-DA102	= EDM	
			Ed.	marcilio.silva			+ MCBN	
			Appr		PRCB 30100 SN2390 DA-66T			Page 44
Modification	Date	Name	Original		X, R, AKAS II-M, RICO CROWNING			Total pages112

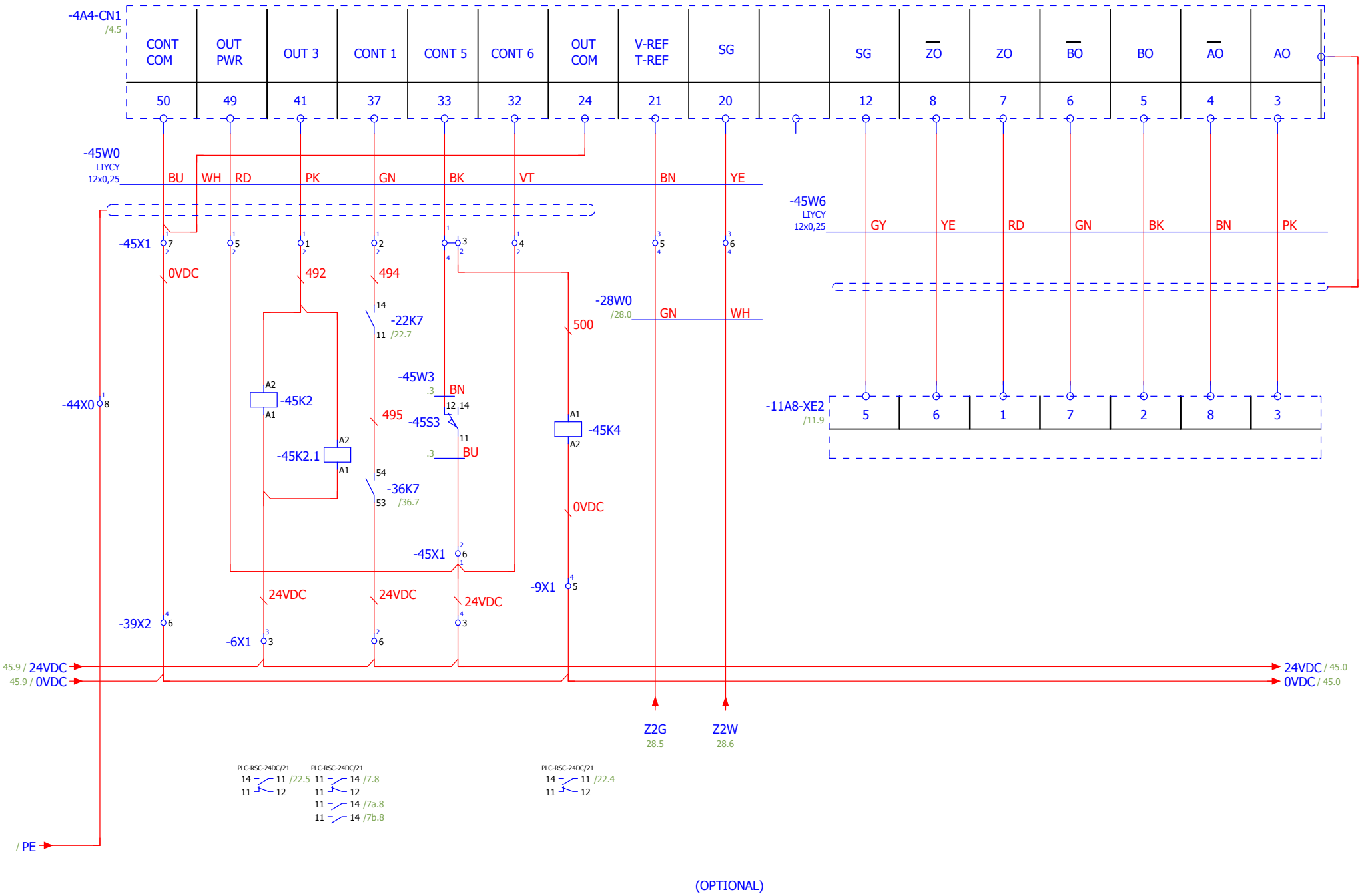

44

46

RICO Precision Ideas				Date	21-03-2016	RICO	Z2-AXIS CN1-DA102	= EDM	
				Ed.	marcilio.silva			+ MCBN	
				Appr		PRCB 30100 SN2390 DA-66T			Page 45
	Modification	Date	Name	Original		X, R, AKAS II-M, RICO CROWNING			Total pages112

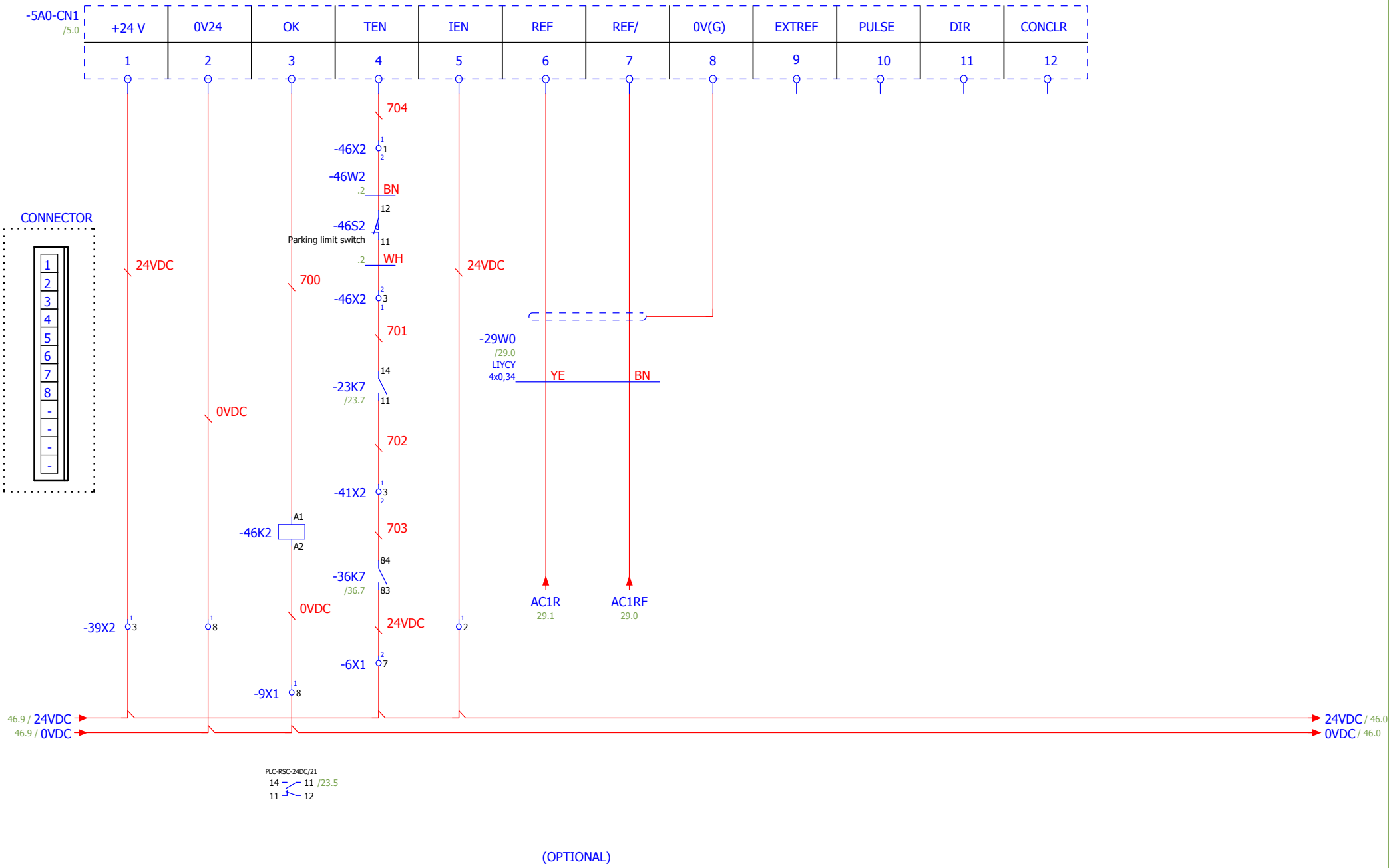

RICO Precision Ideas				Date	21-03-2016	RICO	DEC1 CN1-DA102	= EDM
				Ed.	marcilio.silva			+ MCBN
				Appr		PRCB 30100 SN2390 DA-66T		Page 46
	Modification	Date	Name	Original		X, R, AKAS II-M, RICO CROWNING		Total pages112

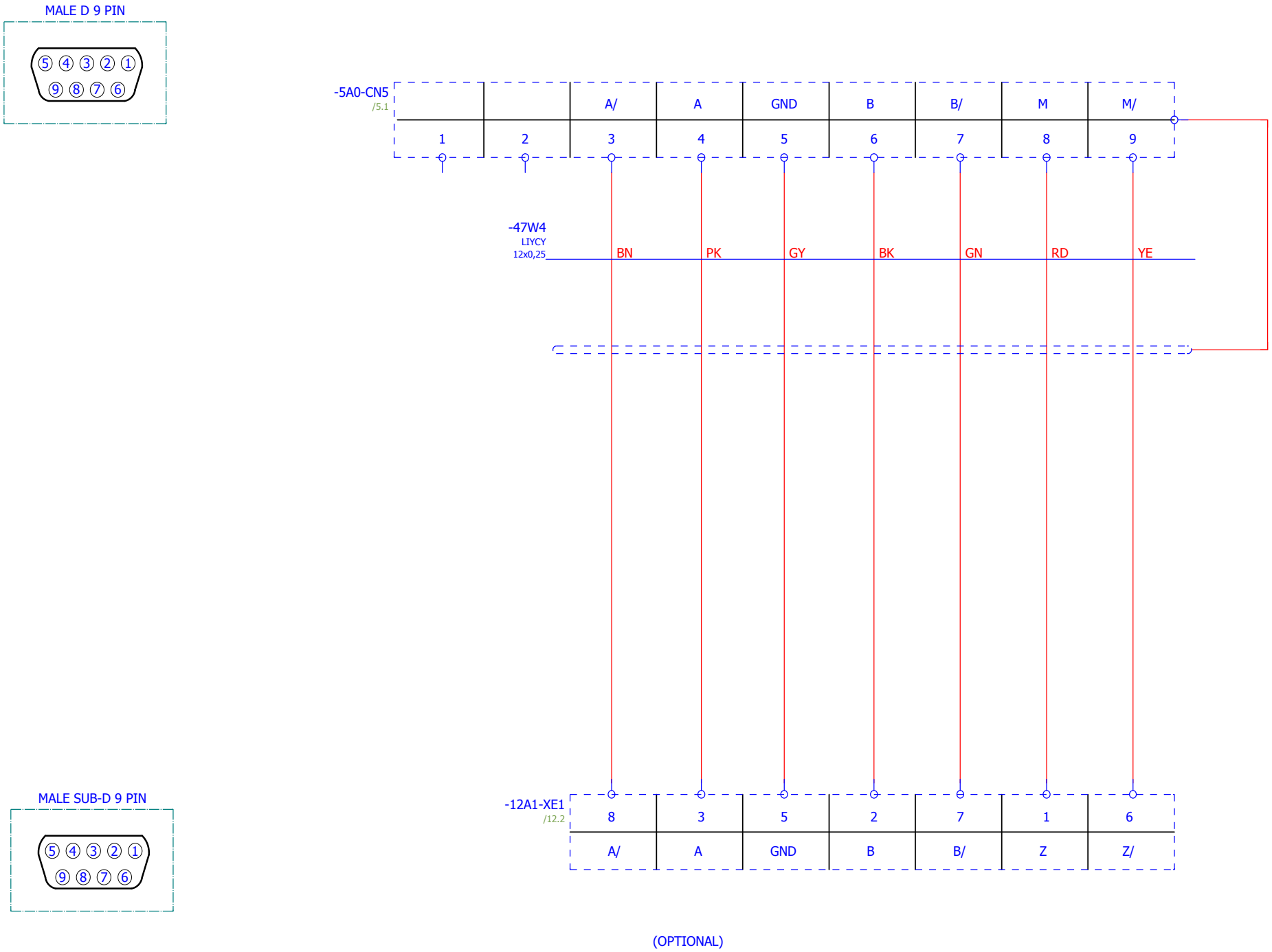

46 48

RICO Precision Ideas			Date	03-03-2016	RICO	DEC1 CN5-DA102	= EDM	
			Ed.	marcilio.silva			+ MCBN	
			Appr		PRCB 30100 SN2390 DA-66T			Page 47
	Modification	Date	Name	Original	X, R, AKAS II-M, RICO CROWNING			Total pages112

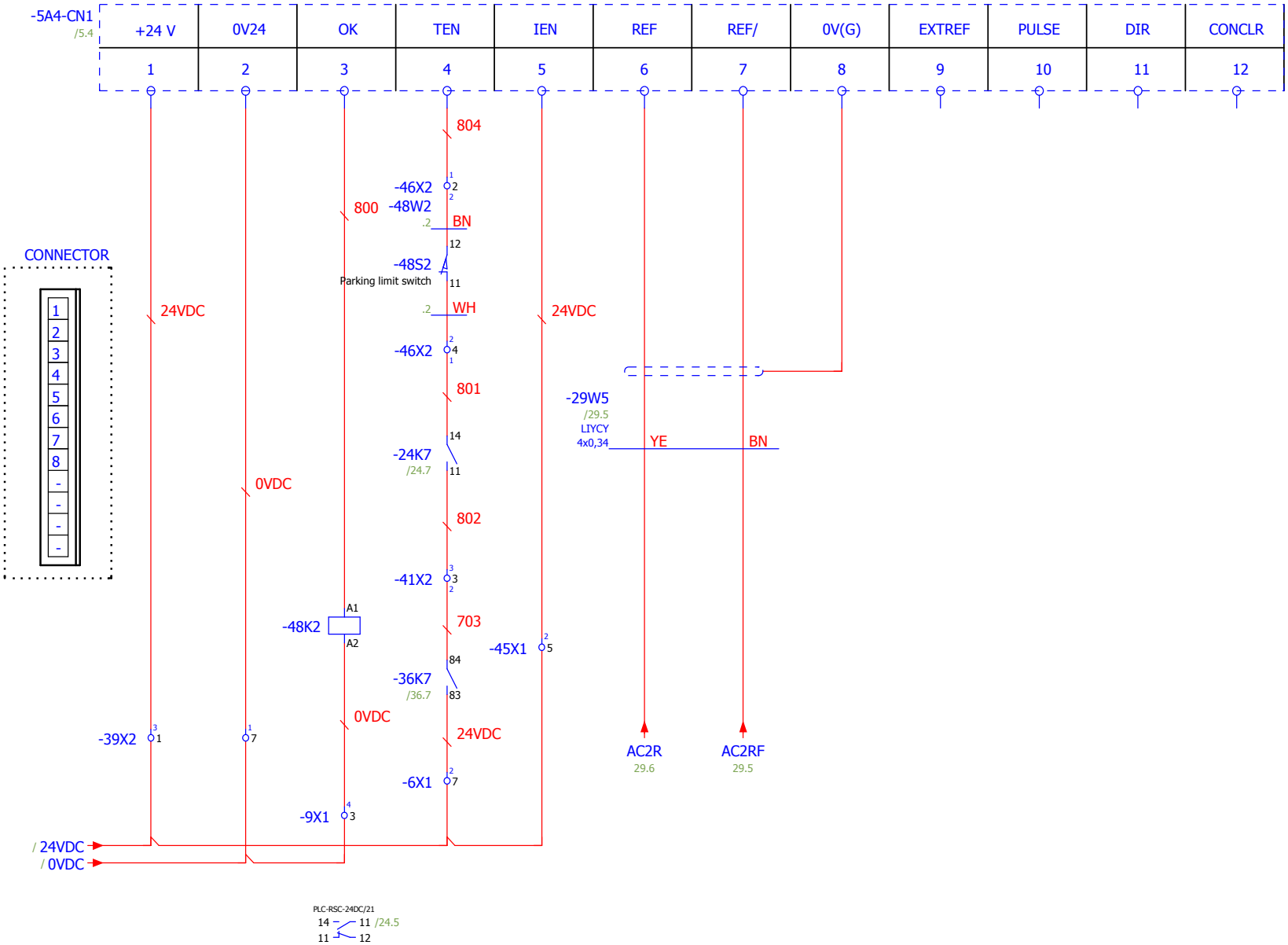

(OPTIONAL)

RICO Precision Ideas			Date	21-03-2016	RICO	DEC2 CN1-DA102	= EDM	
			Ed.	marcilio.silva			+ MCBN	
			Appr		PRCB 30100 SN2390 DA-66T			Page 48
Modification	Date	Name	Original		X, R, AKAS II-M, RICO CROWNING			Total pages112

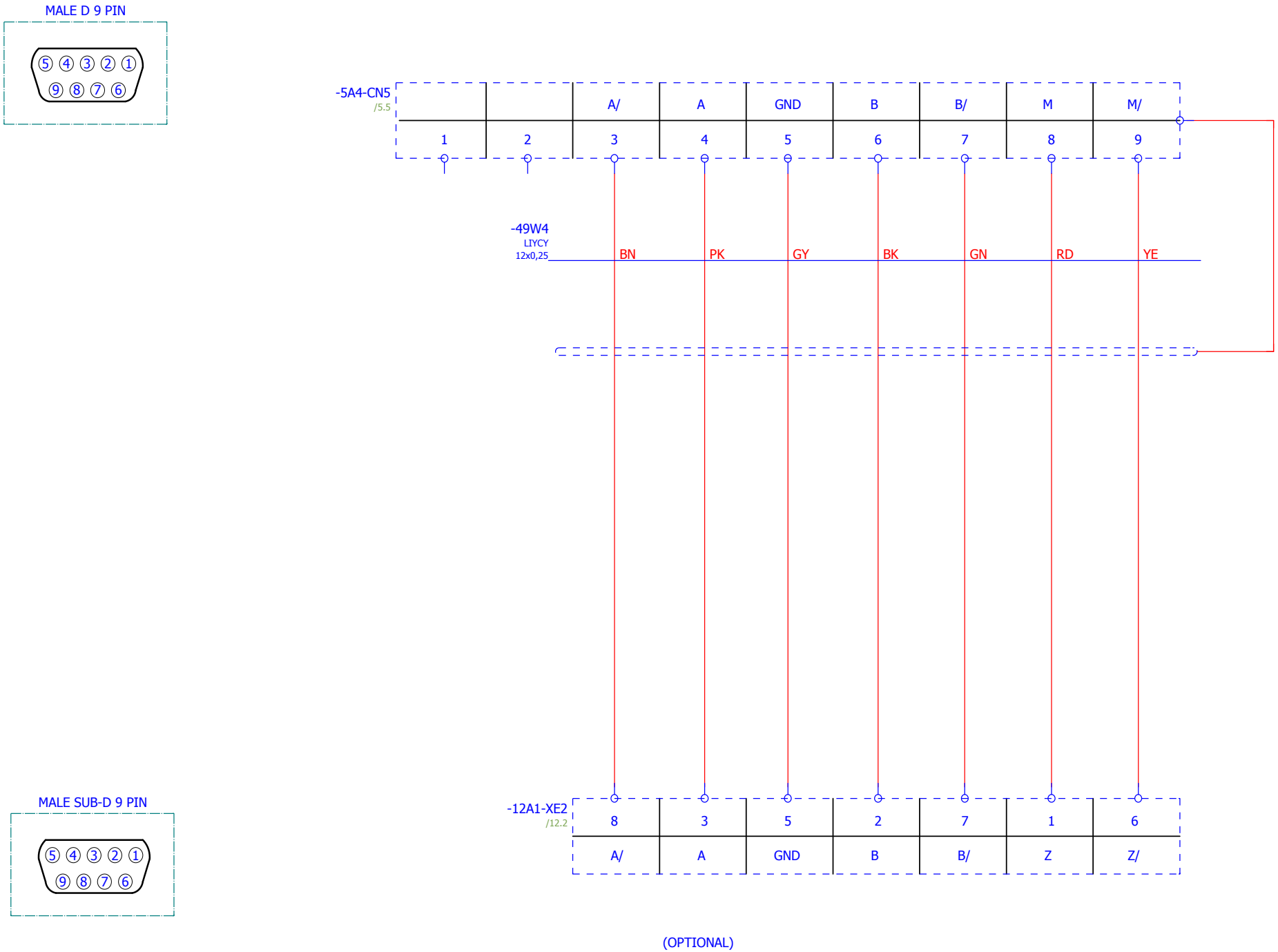

=REPORT+/1

Modification	Date	Name	Date	03-03-2016	RICO	DEC2 CN5-DA102	= EDM
			Ed.	marcilio.silva			+ MCBN
			Appr		PRCB 30100 SN2390 DA-66T		Page 49
			Original		X, R, AKAS II-M, RICO CROWNING		Total pages112

Precision Ideas

Parts list

F01_001

Device tag	Quantity	Designation	Type number	Supplier	Part number
=EDM+MCBN-2AF0	1	Fuse terminal block	2002-1611	WAGO	WAGO.2002-1611
=EDM+MCBN-2AF1	1	Fuse terminal block	2002-1611	WAGO	WAGO.2002-1611
=EDM+MCBN-1F0	2		Fuse Holder	SE	SE.DF143C
=EDM+MCBN-1F5	2	Fuse terminal block	2002-1611	WAGO	WAGO.2002-1611
=EDM+MCBN-1F6	2	Fuse terminal block	2002-1611	WAGO	WAGO.2002-1611
=EDM+MCBN-1F7	2	Fuse terminal block	2002-1611	WAGO	WAGO.2002-1611
=EDM+MCBN-1F8	2	Fuse terminal block	2002-1611	WAGO	WAGO.2002-1611
=EDM+MCBN-1F8.1	2	Fuse terminal block	2002-1611	WAGO	WAGO.2002-1611
=EDM+MCBN-1F8.1	2				FUSE5x20-2A
=EDM+MCBN-1F9	2	Fuse terminal block	2002-1611	WAGO	WAGO.2002-1611
=EDM+MCBN-1F9.1	2	Fuse terminal block	2002-1611	WAGO	WAGO.2002-1611
=EDM+MCBN-1F9.1	2				FUSE5x20-2A
=EDM+MCBN-2F0	1	Fuse terminal block	2002-1611	WAGO	WAGO.2002-1611
=EDM+MCBN-2F0.1	1	Fuse terminal block	2002-1611	WAGO	WAGO.2002-1611
=EDM+MCBN-2F1	1	Fuse terminal block	2002-1611	WAGO	WAGO.2002-1611
=EDM+MCBN-2F1.1	1	Fuse terminal block	2002-1611	WAGO	WAGO.2002-1611
=EDM+MCBN-2F2	1	Fuse terminal block	2002-1611	WAGO	WAGO.2002-1611
=EDM+MCBN-2F2.1	1	Fuse terminal block	2002-1611	WAGO	WAGO.2002-1611
=EDM+MCBN-2F3	1	Fuse terminal block	2002-1611	WAGO	WAGO.2002-1611
=EDM+MCBN-2F3.1	1	Fuse terminal block	2002-1611	WAGO	WAGO.2002-1611
=EDM+MCBN-2F4	1	Fuse terminal block	2002-1611	WAGO	WAGO.2002-1611
=EDM+MCBN-2F5	1	Fuse terminal block	2002-1611	WAGO	WAGO.2002-1611
=EDM+MCBN-2F8	1	Fuse terminal block	2002-1611	WAGO	WAGO.2002-1611
=EDM+MCBN-2F8	1				FUSE5x20-2A
=EDM+MCBN-2F9	1	Fuse terminal block	2002-1611	WAGO	WAGO.2002-1611
=EDM+MCBN-2F9	1				FUSE5x20-2A
=EDM+MCBN-3F0	1	Fuse terminal block	2002-1611	WAGO	WAGO.2002-1611
=EDM+MCBN-3F1	1	Fuse terminal block	2002-1611	WAGO	WAGO.2002-1611
=EDM+MCBN-3F3	1	Fuse terminal block	2002-1611	WAGO	WAGO.2002-1611
=EDM+MCBN-3F4	1	Fuse terminal block	2002-1611	WAGO	WAGO.2002-1611
=EDM+MCBN-3F6	1	Fuse terminal block	2002-1611	WAGO	WAGO.2002-1611
=EDM+MCBN-3F7	1	Fuse terminal block	2002-1611	WAGO	WAGO.2002-1611
=EDM+MCBN-4F0	1	Fuse terminal block	2002-1611	WAGO	WAGO.2002-1611
=EDM+MCBN-4F1	1	Fuse terminal block	2002-1611	WAGO	WAGO.2002-1611
=EDM+MCBN-4F3	1	Fuse terminal block	2002-1611	WAGO	WAGO.2002-1611
=EDM+MCBN-4F4	1	Fuse terminal block	2002-1611	WAGO	WAGO.2002-1611
=EDM+MCBN-5F2	1	Fuse terminal block	2002-1611	WAGO	WAGO.2002-1611
=EDM+MCBN-5F3	1	Fuse terminal block	2002-1611	WAGO	WAGO.2002-1611
=EDM+MCBN-5F4	1	Fuse terminal block	2002-1611	WAGO	WAGO.2002-1611
=EDM+MCBN-5F6	1	Fuse terminal block	2002-1611	WAGO	WAGO.2002-1611
=EDM+MCBN-5F7	1	Fuse terminal block	2002-1611	WAGO	WAGO.2002-1611
=EDM+MCBN-5F8	1	Fuse terminal block	2002-1611	WAGO	WAGO.2002-1611
=EDM+MCBN-13F3	1	Fuse terminal block	2002-1611	WAGO	WAGO.2002-1611
=EDM+MCBN-13F3.1	1	Fuse terminal block	2002-1611	WAGO	WAGO.2002-1611
=EDM+MCBN-13F4	1	Fuse terminal block	2002-1611	WAGO	WAGO.2002-1611
=EDM+MCBN-13F5	1	Fuse terminal block	2002-1611	WAGO	WAGO.2002-1611
=EDM+MCBN-1Q2	2	thermal overload relay for motor TeSys	LRD21	SE	SE.LRD21
=EDM+MCBN-1Q6	2	thermal overload relay for motor TeSys	LRD32	SE	SE.LRD32

Pos	Code name	designation	Quantity	Remark
	WAGO.2002-2211/1000-0410	DOUBLE DECK DIODE TERMINAL BLOCK	2	CENTRE MARKING
			0	
	DA66T		1	
	RC.12.06.10.009	Generic Sub-D 9 pin female connector	3	
	COMPACTA 6-12-MS 12K		2	
	TEL.XCSPA791	SAFETY INTERLOCKING SWITCH	2	
	R2AA08085FXH11M 750W		2	
	R2AA06020FXH11M 200W		3	
	TME118/IRN118EP	Armadura TME118/IRN118EP	2	
	BACO.33E10	NO CONTACT	2	
	PZZ.PX12040	3 Position pedal PX12040	2	
	SE.ZB6-Z1B	NO BLOCK	9	
	SE.ZB6-EB5B	YELLOW LED	3	
	SD.RS1A03AA	SANYO DENKI DRIVE RS1A03AA (30A)	2	
	DELEM.I/O-DC-178909	Delem I/O connector with LED	17	
	SANYO.AL-00385596	CN2 connector	5	
	SANYO.AL-00329461-01	CNA connector	1	
	SANYO.AL-00329458-01	CNC connector	5	
	SANYO.AL-00385594	CN1 connector	4	
	SANYO.AL-00385594_1		4	
	SD.RS1A01AA	SANYO DENKI DRIVE RS1A01AA (15A)	3	
	UNIMEC.F1ECO4D		2	
	DELEM.DM-103 VA		1	
	DELEM.I/O-DC-161586	Delem I/O connector	8	
	DELEM.DC-SUBD-15-F-CP	Delem analog A connector	5	
	DELEM.DC-SUBD-15-M-CP	Delem analog B connector	1	

Pos	Code name	designation	Quantity	Remark
	DELEM.DC-SUBD-9-M-CP	Delem encoder 9pin male connector	11	
	DELEM.DK-1079-002	Delem valve interface cable DK-1079-002 (1,5m)	2	
	DELEM.DM-102		3	
	FPSC-B-C-S		1	
	RICO.SUBD-9-M	Generic Sub-D 9 pin male connector	2	
	FIESSLER.GMSAV2	Fiessler GMSAV2 counter decoder	1	
	RICO.SUBD-9-F	Generic Sub-D 9 pin female connector	3	
	WAGO.2002-1611	Fuse terminal block	48	CENTRE-/ LATERAL MARKING
	SE.ABL8MEM05040		1	
	LIYCYFLEX12x0,25	Flexible control cable 12x0,25	12	
	SE.DF143C		2	
	FUSE5x20-10A		4	
	FUSE5x20-2A		6	
	SE.RM17TG00	RM17TG00	2	
	SE.LC1D098B7	contactor TeSys LC1-D - 4P (2NO + 2NC) - AC-1	7	440V 20A - coil 24 V AC
	GC1610B5		14	
	SE.CA3KN223BD	contactor CA3-K - 2 NO + 2 NC	2	instantaneous - 10A - 24 V DC
	PXC. PLC-RSC-24DC/21	Single relay	39	
	SE.CA3KN31BD3	contactor CA3-K - 3 NO + 1 NC	2	instantaneous - 10A - 24 V DC
	SE.LC1D123B7	contactor TeSys LC1-D - 3P - AC-3 440V 12A	2	coil 24 V AC
	VENT.120x120x3 230V	VENTILATOR 120x120x3 230V	1	
	SE.LRD21	thermal overload relay for motor TeSys	2	12..18 A - class 10A
	SE.LRD32	thermal overload relay for motor TeSys	2	23..32A - class 10A
	A-B.194E-A80-1753	IEC Load Switch, Base/DIN Rail Mounting	2	OFF-ON (90°)
	SMC.D-A93L	Auto switch Reed, 2-wire 24V DC, 100V AC,	2	3m cable, direct mounting, indicator light (red LED),
	PZZ.MKV11D15		8	

Pos	Code name	designation	Quantity	Remark
	400V-230V(920VA)+24V(100VA)		2	
	SE.ABL8RPS24030	24DV - 3A - POWER SUPPLY	1	
	SE.ABL8RPS24100	24DV - 10A - POWER SUPPLY	1	
	HMS-024V	Hour counter	1	
	DELEM.DK-HSB-RJ45-05	CABO HIGH SPEED BUS RJ45 DELEM DK-HSB-RJ45-05	4	
	LIYCY4x1,5	Shielded control cable 4x1,5	1	
	LAPP.1119 204 (4G1,0)	Control line, 4G1.0	1	
	LAPP.1119 203 (3G1,0)	Control line, 3G1.0	5	
	SANYO.AADCABMOT-R2-3M	Sanyo motor connection cable 3M	1	
	SANYO.AADCABCOD-R2-3M	Sanyo encoder cable (3m)	1	
	SANYO.AADCABMOT-R2-4M	Sanyo motor connection cable (4m)	1	
	SANYO.AADCABCOD-R2-4M	Sanyo encoder cable (4m)	1	
	SANYO.AADCABMOT-R2-7M	Sanyo motor connection cable (7m)	3	
	SANYO.AADCABCOD-R2-7M	Sanyo encoder cable (7m)	3	
	IGUS.CF27.15.15.02.01.D	PUR servo cable CF27.D (4G1,5+(2x1,5)C)C	2	
	TKD.1503495	KAWEFLEX 5477 SK-C-PUR UL/CSA 8X2X0,18	2	OB, GREEN, FOR DRAG CHAIN
	LAPP.1137105	ÖLFLEX® FD 820 H 5G0,75	1	
	LIYCYFLEX4x0,34	Flexible control cable 4x0,34	2	
	HELU.24577	UL/CSA Cable for Drag Chains MULTISPEED®-TRONIC-PUR 4x0,34 mm² (22 AWG) BK	2	
	LIYCY4x0,34	Shielded control cable 4x0,34	3	
	DELEM.DK-HSB-RJ45-70	CABO HIGH SPEED BUS RJ45 DELEM DK-HSB-RJ45-70	1	
	DELEM.DK-24N-40	Delem 24 power cable (4m)	4,00	
	DELEM.DK-1080-002	Delem 24 power cable (1.5m)	4	
	LIYCY12x0,25	Shielded control cable 12x0,25	10	
	LAPP.0034604	UNITRONIC LiYCY 4x0,5	12	
	TKD.0500325	ELITRONIC-CY LIYCY 3X0,14	2	DIN47100, GREY RAL 7001

Pos	Code name	designation	Quantity	Remark
	LAPP.0034504	UNITRONIC LiYCY 4x0,34	2	
	LAPP.0034412	UNITRONIC LiYCY 12x0,25	3	
	LIYCYFLEX4x0,25	Flexible control cable 4x0,25	2	
	H05W-F 3G1,00	Power cable H05W-F 3G1,00	3	
	LAPP.0034603	UNITRONIC LiYCY 3x0,5	1	
	GIVIMISURE.8PM04/SCG2-C86		1	
	GIVIMISURE.8PM07/SCG2-C86		1	
	WAGO.2006-1201	2-CONDUCTOR THROUGH TERMINAL BLOCK	18	CENTRE-/ LATERAL MARKING
	WAGO.2006-1207	2-CONDUCTOR EARTH TERMINAL BLOCK	19	CENTRE-/ LATERAL MARKING
	WAGO.2002-2201	DOUBLE DECK TERMINAL BLOCK	337	THROUGH/THROUGH
	WAGO.2004-1207	2-CONDUCTOR EARTH TERMINAL BLOCK	33	CENTRE-/ LATERAL MARKING
	WAGO.2002-2211/1000-0411	DOUBLE DECK DIODE TERMINAL BLOCK	11	CENTRE MARKING
	HAR.09120032774	HAN-BRID RJ45 PASAMUROS	1	
	WAGO.2002-2221/1000-0434	DOUBLE DECK LED TERMINAL BLOCK	3	CENTRE MARKING
	Green5mmLED	Green 5mm LED	2	
	SE.ZB6-Z2B	NC BLOCK	1	
	SE.ZB6-Z5B	NO-NC BLOCK	1	
	AKAS-LC-II-M		1	
	GIVIMISURE.PBSHR5Z00220 05VL M0.5/S CG1		2	
	PSEN OP4H-S-30-090/1	Light Barrier	1	

Cable diagram

F09_002

Cable name	=EDM+MCBN-2AW1		Cable type	LIYCY FLEX				
Function text			No. of conductors	12		Cross-section	0,25	Cable length
Function text	Page / column	Target designation from	Connection point	Conductor	Target designation to	Connection point	Page / column	Function text
	/11.1	+NMC1-11A0-COM2	3	BU	+LED-2AU1	TX	/2a.2	
	/11.1	+NMC1-11A0-COM2	2	PK	+LED-2AU1	RX	/2a.2	
	/11.1	+NMC1-11A0-COM2	5	YE	+LED-2AU1	GND	/2a.2	

Cable name	=EDM+MCBN-W1		Cable type	DK-HSB-RJ45-05				
Function text			No. of conductors			Cross-section		Cable length
Function text	Page / column	Target designation from	Connection point	Conductor	Target designation to	Connection point	Page / column	Function text
	/11.8	-11A8	HSB_H		-12A1	HSB_H	/12.1	
	/11.8	-11A8	GND		-12A1	GND	/12.2	
	/11.9	-11A8	HSB_L		-12A1	HSB_L	/12.2	

Cable name	=EDM+MCBN-1W0		Cable type	H07				
Function text			No. of conductors	4G		Cross-section	16	Cable length
Function text	Page / column	Target designation from	Connection point	Conductor	Target designation to	Connection point	Page / column	Function text
	/1.0	-1X0	1:2	L1	L1		/1.0	
	/1a.0	-1X0	1:2	L1	L1		/1a.0	
	/1.0	-1X0	2:2	L2	L2		/1.0	
	/1a.0	-1X0	2:2	L2	L2		/1a.0	
	/1.0	-1X0	3:2	L3	L3		/1.0	
	/1a.0	-1X0	3:2	L3	L3		/1a.0	
	/1.1	-1X0	4:2	PE	PE		/1.1	
	/1a.1	-1X0	4:2	PE	PE		/1a.1	

Cable name	=EDM+MCBN-1W5		Cable type	LIYCY				
Function text			No. of conductors	4		Cross-section	1,5	Cable length
Function text	Page / column	Target designation from	Connection point	Conductor	Target designation to	Connection point	Page / column	Function text
				1				
				2				

Cable diagram

F09_002

Cable name	=EDM+MCBN-1W5		Cable type	LIYCY				
Function text			No. of conductors	4		Cross-section	1,5	Cable length
Function text	Page / column	Target designation from	Connection point	Conductor	Target designation to	Connection point	Page / column	Function text
				3				
				GNYE				
	/1.6	+MSB1-1X6	1	BN	-1X6	3:2	/1.6	
	/1a.6	+MSB1-1X6	1	BN	-1X6	4:2	/1a.6	
	/1.6	+MSB1-1A5	PE	GN	-1X6	1	/1.6	
	/1a.6	+MSB1-1A5	PE	GN	-1X6	1	/1a.6	
	/1.6	+MSB1-1X6	3	WH	-1X6	4:2	/1.6	
	/1a.6	+MSB1-1X6	3	WH	-1X6	3:2	/1a.6	
	/1.6	+MSB1-1X6	2	YE	-1X6	2:2	/1.6	
	/1a.6	+MSB1-1X6	2	YE	-1X6	2:2	/1a.6	

Cable name	=EDM+MCBN-2W4		Cable type					
Function text			No. of conductors			Cross-section		Cable length
Function text	Page / column	Target designation from	Connection point	Conductor	Target designation to	Connection point	Page / column	Function text
				1				
				2				
				GNYE				
	/2.4	-2X4	1:1	WH	+LGTR-2H4	x1	/2.4	
	/2.5	-2X4	2:1	WH	+LGTR-2H4	x2	/2.4	

Cable name	=EDM+MCBN-2W5		Cable type	ÖLFLEX CLASSIC 110				
Function text			No. of conductors	3G		Cross-section	1	Cable length
Function text	Page / column	Target designation from	Connection point	Conductor	Target designation to	Connection point	Page / column	Function text
				1				
				2				
				GNYE				
	/2.4	-2X4	1:3	BN	+LGTF-2H5	x1	/2.5	
	/2.5	-2X4	2:3	BU	+LGTF-2H5	x2	/2.5	

Cable diagram

F09_002

Cable name	=EDM+MCBN-2W8		Cable type	ÖLFLEX CLASSIC 110				
Function text			No. of conductors	3G		Cross-section	1	Cable length
Function text	Page / column	Target designation from	Connection point	Conductor	Target designation to	Connection point	Page / column	Function text
				1				
				2				
				GNYE				
	/2.8	-2F8	2	BN	-2M8	1	/2.8	
	/2.9	-2F9	2	BU	-2M8	2	/2.8	

Cable name	=EDM+MCBN-3W0		Cable type	SANYO.AADCABMOT-R2-3M				
Function text			No. of conductors			Cross-section		Cable length
Function text	Page / column	Target designation from	Connection point	Conductor	Target designation to	Connection point	Page / column	Function text
BRUSHLESS MOTOR R2AA08075F	/3.1	+BGG-3M0-M	PE	GNYE	PE		/3.2	
BRUSHLESS MOTOR R2AA08075F	/3.1	+BGG-3M0-M	U1	U	-3A1-CNC	U	/3.2	
BRUSHLESS MOTOR R2AA08075F	/3.1	+BGG-3M0-M	V1	V	-3A1-CNC	V	/3.2	
BRUSHLESS MOTOR R2AA08075F	/3.1	+BGG-3M0-M	W1	W	-3A1-CNC	W	/3.2	

Cable name	=EDM+MCBN-3W2		Cable type	SANYO.AADCABCOD-R2-3M				
Function text			No. of conductors			Cross-section		Cable length
Function text	Page / column	Target designation from	Connection point	Conductor	Target designation to	Connection point	Page / column	Function text
	/3.2	+BGG-3M0-ENC			-3A1-CN2		/3.2	

Cable name	=EDM+MCBN-3W3		Cable type	SANYO.AADCABMOT-R2-4M				
Function text			No. of conductors			Cross-section		Cable length
Function text	Page / column	Target designation from	Connection point	Conductor	Target designation to	Connection point	Page / column	Function text
BRUSHLESS MOTOR R2AA08075F	/3.3	+BGG-3M3-M	PE	GNYE	PE		/3.5	
BRUSHLESS MOTOR R2AA08075F	/3.3	+BGG-3M3-M	W1	U	-3A4-CNC	W	/3.5	
BRUSHLESS MOTOR R2AA08075F	/3.3	+BGG-3M3-M	V1	V	-3A4-CNC	V	/3.5	
BRUSHLESS MOTOR R2AA08075F	/3.3	+BGG-3M3-M	U1	W	-3A4-CNC	U	/3.5	

Cable diagram

F09_002

Cable name	=EDM+MCBN-3W5		Cable type	SANYO.AADCABCOD-R2-4M				
Function text			No. of conductors			Cross-section		Cable length
Function text	Page / column	Target designation from	Connection point	Conductor	Target designation to	Connection point	Page / column	Function text
	/3.4	+BGG-3M3-ENC			-3A4-CN2		/3.5	

Cable name	=EDM+MCBN-3W6		Cable type	SANYO.AADCABMOT-R2-7M				
Function text			No. of conductors			Cross-section		Cable length
Function text	Page / column	Target designation from	Connection point	Conductor	Target designation to	Connection point	Page / column	Function text
BRUSHLESS MOTOR R2AA08075F	/3.6	+BGG-3M6-M	PE	GNYE	PE		/3.8	
BRUSHLESS MOTOR R2AA08075F	/3.6	+BGG-3M6-M	U1	U	-3A7-CNC	U	/3.8	
BRUSHLESS MOTOR R2AA08075F	/3.6	+BGG-3M6-M	V1	V	-3A7-CNC	V	/3.8	
BRUSHLESS MOTOR R2AA08075F	/3.6	+BGG-3M6-M	W1	W	-3A7-CNC	W	/3.8	

Cable name	=EDM+MCBN-3W8		Cable type	SANYO.AADCABCOD-R2-7M				
Function text			No. of conductors			Cross-section		Cable length
Function text	Page / column	Target designation from	Connection point	Conductor	Target designation to	Connection point	Page / column	Function text
	/3.7	+BGG-3M6-ENC			-3A7-CN2		/3.8	

Cable name	=EDM+MCBN-4W0		Cable type	SANYO.AADCABMOT-R2-7M				
Function text			No. of conductors			Cross-section		Cable length
Function text	Page / column	Target designation from	Connection point	Conductor	Target designation to	Connection point	Page / column	Function text
BRUSHLESS MOTOR R2AA08075F	/4.0	+BGG-4M0-M	U1	U	-4A1-CNC	U	/4.2	
BRUSHLESS MOTOR R2AA08075F	/4.0	+BGG-4M0-M	V1	V	-4A1-CNC	V	/4.2	
BRUSHLESS MOTOR R2AA08075F	/4.0	+BGG-4M0-M	W1	W	-4A1-CNC	W	/4.2	

Cable name	=EDM+MCBN-4W2		Cable type	SANYO.AADCABCOD-R2-7M				
Function text			No. of conductors			Cross-section		Cable length
Function text	Page / column	Target designation from	Connection point	Conductor	Target designation to	Connection point	Page / column	Function text
	/4.1	+BGG-4M0-ENC			-4A1-CN2		/4.2	

Cable diagram

F09_002

Cable name =EDM+MCBN-4W3			Cable type SANYO.AADCABMOT-R2-7M					
Function text			No. of conductors			Cross-section		Cable length
Function text	Page / column	Target designation from	Connection point	Conductor	Target designation to	Connection point	Page / column	Function text
BRUSHLESS MOTOR R2AA08075F	/4.3	+BGG-4M3-M	U1	U	-4A4-CNC	U	/4.5	
BRUSHLESS MOTOR R2AA08075F	/4.3	+BGG-4M3-M	V1	V	-4A4-CNC	V	/4.5	
BRUSHLESS MOTOR R2AA08075F	/4.3	+BGG-4M3-M	W1	W	-4A4-CNC	W	/4.5	

Cable name =EDM+MCBN-4W5			Cable type SANYO.AADCABCOD-R2-7M					
Function text			No. of conductors			Cross-section		Cable length
Function text	Page / column	Target designation from	Connection point	Conductor	Target designation to	Connection point	Page / column	Function text
	/4.4	+BGG-4M3-ENC			-4A4-CN2		/4.5	

Cable name =EDM+MCBN-5W1			Cable type					
Function text			No. of conductors			Cross-section		Cable length
Function text	Page / column	Target designation from	Connection point	Conductor	Target designation to	Connection point	Page / column	Function text
				BK(L1)				
				BK(L2)				
				BK(L3)				
				GNYE				
				BK5				
				BK6				
				SH				
	/9.7		x1	BK	-9X7	2	/9.7	
	/9.7	-10X4	5	WH	-9X7	1	/9.7	
	/5.1	-5A0-M			+ACFL-5M2-M	W1	/5.2	
	/5.1	-5A0-M			+ACFL-5M2-M	V1	/5.2	
	/5.1	-5A0-M			+ACFL-5M2-M	U1	/5.2	
	/5.1				+ACFL-5M2-M	PE	/5.2	

Cable diagram

F09_002

Cable name	=EDM+MCBN-5W3		Cable type	KAWEFLEX 5477 SK-C-PUR UL/CSA				
Function text			No. of conductors	16		Cross-section	0,18	Cable length
Function text	Page / column	Target designation from	Connection point	Conductor	Target designation to	Connection point	Page / column	Function text
				SH				
				BK				
				BN				
				RD				
				OG				
				YE				
				GN				
				BU				
				VT				
				GY				
				WH				
				WHBK				
				WHBN				
				WHRD				
				WHOG				
				WHYE				
				WHGN				
	/5.2	-5A0-CN3			+ACFL-5M2-ENC	1	/5.3	

Cable name	=EDM+MCBN-5W5		Cable type	PUR-Servoleitung				
Function text			No. of conductors	4		Cross-section	1,5+1,5	Cable length
Function text	Page / column	Target designation from	Connection point	Conductor	Target designation to	Connection point	Page / column	Function text
				BK(L1)				
				BK(L2)				
				BK(L3)				
				GNYE				
				BK5				

Cable diagram

F09_002

Cable name	=EDM+MCBN-5W5		Cable type	PUR-Servoleitung				
Function text			No. of conductors	4		Cross-section	1,5+1,5	Cable length
Function text	Page / column	Target designation from	Connection point	Conductor	Target designation to	Connection point	Page / column	Function text
				BK6				
				SH				
	/9.8		x1	BK	-9X8	2	/9.8	
	/9.8	-10X4	6	WH	-9X8	1	/9.8	
	/5.5	-5A4-M			+ACFR-5M6-M	W1	/5.6	
	/5.5	-5A4-M			+ACFR-5M6-M	V1	/5.6	
	/5.5	-5A4-M			+ACFR-5M6-M	U1	/5.6	
	/5.5				+ACFR-5M6-M	PE	/5.6	

Cable name	=EDM+MCBN-5W7		Cable type	KAWEFLEX 5477 SK-C-PUR UL/CSA				
Function text			No. of conductors	16		Cross-section	0,18	Cable length
Function text	Page / column	Target designation from	Connection point	Conductor	Target designation to	Connection point	Page / column	Function text
				SH				
				BK				
				BN				
				RD				
				OG				
				YE				
				GN				
				BU				
				VT				
				GY				
				WH				
				WHBK				
				WHBN				
				WHRD				
				WHOG				

Cable diagram

F09_002

Cable name	=EDM+MCBN-5W7		Cable type	KAWEFLEX 5477 SK-C-PUR UL/CSA				
Function text			No. of conductors	16		Cross-section	0,18	Cable length
Function text	Page / column	Target designation from	Connection point	Conductor	Target designation to	Connection point	Page / column	Function text
				WHYE				
				WHGN				
	/5.6	-5A4-CN3			+ACFR-5M6-ENC	1	/5.7	

Cable name	=EDM+MCBN-7W1		Cable type	LIYCY FLEX				
Function text			No. of conductors	12		Cross-section	0,25	Cable length
Function text	Page / column	Target designation from	Connection point	Conductor	Target designation to	Connection point	Page / column	Function text
	/7b.4	-7X1	3:3	1	+MSB1-1X6	1	/7b.4	
	/7b.3	-7X1	2:3	2	+MSB1-1X6	2	/7b.3	
	/7b.3	-7X1	1:3	3	+MSB1-1X6	3	/7b.3	
	/7b.1	-7X1	1:1	4	+MSB1-1X6	4	/7b.1	
	/7b.1	-7X1	2:1	5	+MSB1-1X6	5	/7b.1	
	/7b.2	-7X1	3:1	5	+MSB1-1X6	5	/7b.1	
	/7.1	-7X1	3:1	BN	+MSB1-CRWN	11	/7.1	
	/7a.1	-7X1	1:1	BN	+MSB1-CRWN	15	/7a.2	
	/7.3	-7X1	2:3	BU	+MSB1-CRWN	19	/7.3	
	/7a.3	-7X1	2:3	BU	+MSB1-CRWN	19	/7a.3	
	/7.2	-7X1	1:1	GN	+MSB1-CRWN	15	/7.2	
	/7a.2	-7X1	3:1	GN	+MSB1-CRWN	11	/7a.1	
	/7.3	-7X1	1:3	PK	+MSB1-CRWN	18	/7.3	
	/7a.3	-7X1	1:3	PK	+MSB1-CRWN	18	/7a.3	
	/7.4	-7X1	3:3	RD	+MSB1-CRWN	20	/7.4	
	/7a.4	-7X1	3:3	RD	+MSB1-CRWN	20	/7a.4	
	/7.1	-7X1	2:1	WH	+MSB1-CRWN	12	/7.1	
	/7a.1	-7X1	2:1	WH	+MSB1-CRWN	12	/7a.1	

Cable diagram

F09_002

Cable name	=EDM+MCBN-9W2		Cable type	LIYCY FLEX				
Function text			No. of conductors	4		Cross-section	0,34	Cable length
Function text	Page / column	Target designation from	Connection point	Conductor	Target designation to	Connection point	Page / column	Function text
	/9.2	+BGG-YP1_2-YP1_2		BN	-19K5	14	/9.2	
	/9.2	+BGG-YP1_2-YP1_2		WH	-9X1	10	/9.2	

Cable name	=EDM+MCBN-9W3		Cable type	LIYCY FLEX				
Function text			No. of conductors	4		Cross-section	0,34	Cable length
Function text	Page / column	Target designation from	Connection point	Conductor	Target designation to	Connection point	Page / column	Function text
	/9.2	+BGG-YP1_2-YP1_2		BN	-19K6	14	/9.3	
	/9.2	+BGG-YP1_2-YP1_2		WH	-9X1	9	/9.3	

Cable name	=EDM+MCBN-9W5		Cable type	LIYCY FLEX				
Function text			No. of conductors	20		Cross-section	0,25	Cable length
Function text	Page / column	Target designation from	Connection point	Conductor	Target designation to	Connection point	Page / column	Function text
	/14.1	-9X6.A	14	BK	-7X0	1:4	/14.1	
	/38.4	-9X6.A	8	BN	-33X9	12:2	/38.4	
	/14.5	-9X6.A	17	BN/GY	-7X0	5:4	/14.6	
	/31.9	-9X6.A	16	BN/PK	-9X5	8:1	/31.9	
	/31a.9	-9X6.A	16	BN/PK	-9X5	8:1	/31a.9	
	/9.5	-9X6.B	16	BN/YE	+NMC1-9H5	BN/YE	/9.5	CNC READY
	/9.6	-9X6.A	2	BU	+NMC1-9R5	BU	/9.5	
	/14.1	-9X6.A	7	GN	-7X0	2:4	/14.1	
	/14.5	-9X6.A	10	GN/WH	-7X0	10:4	/14.6	
	/14.5	-9X6.A	5	GY	-7X0	7:4	/14.6	
	/30.2	-9X6.A	3	PK	-9X5	7:1	/30.2	
	/14.1	-9X6.A	1	RD	-7X0	11:4	/14.1	
	/30.1	-9X6.A	11	RD/BU	-39X2	1:3	/30.1	
	/37.9	-9X6.A	13	VT	-9X5	14:1	/37.9	
	/30.1	-9X6.A	4	WH/PK	-9X5	6:1	/30.1	
	/37.7	-9X6.A	6	YE	-9X5	12:1	/37.7	

Cable diagram

F09_002

Cable name	=EDM+MCBN-9W5		Cable type	LIYCY FLEX				
Function text			No. of conductors	20		Cross-section	0,25	Cable length
Function text	Page / column	Target designation from	Connection point	Conductor	Target designation to	Connection point	Page / column	Function text
	/37.8	-9X6.B	17	YE/WH	-9X5	13:1	/37.8	

Cable name	=EDM+MCBN-10W0		Cable type	MULTISPEED®-TRONIC-PUR				
Function text			No. of conductors	4,0		Cross-section	0,34	Cable length
Function text	Page / column	Target designation from	Connection point	Conductor	Target designation to	Connection point	Page / column	Function text
	/10.0	-46X2	5:2	WH	+ACF-10B0	3	/10.0	
	/10.0	-46X2	1:4	BN	+ACF-10B0	1	/10.0	
				GN				
				YE				
	/10.1	-46X2	4:4	BU	+ACF-10B0	2	/10.0	

Cable name	=EDM+MCBN-10W1		Cable type	MULTISPEED®-TRONIC-PUR				
Function text			No. of conductors	4,0		Cross-section	0,34	Cable length
Function text	Page / column	Target designation from	Connection point	Conductor	Target designation to	Connection point	Page / column	Function text
	/10.1	-46X2	6:2	WH	+ACF-10B1	3	/10.1	
	/10.1	-46X2	2:4	BN	+ACF-10B1	1	/10.1	
				GN				
				YE				
	/10.2	-46X2	5:4	BU	+ACF-10B1	2	/10.1	

Cable name	=EDM+MCBN-10W4		Cable type	LIYCY				
Function text			No. of conductors	4		Cross-section	0,34	Cable length
Function text	Page / column	Target designation from	Connection point	Conductor	Target designation to	Connection point	Page / column	Function text
	/10.4	-10X4	1:3	BN	+HBC-10S4	1	/10.4	
	/10.4	-10X4	1:1	YE	+HBC-10S4	3	/10.4	
	/10.5	-10X4	2:1		+HBC-10S4	2	/10.4	

Cable diagram

F09_002

Cable name	=EDM+MCBN-10W5		Cable type	ÖLFLEX CLASSIC 110				
Function text			No. of conductors	3G		Cross-section 1		Cable length
Function text	Page / column	Target designation from	Connection point	Conductor	Target designation to	Connection point	Page / column	Function text
				1				
				2				
				GNYE				
	/10.5	-10X4	3:1	BN	+HBC-Y30	x1	/10.5	
	/10.5	-10X4	3:3	BU	+HBC-Y30	x2	/10.5	
	/10.5		x1	BU	+HBC-Y30	x2	/10.5	

Cable name	=EDM+MCBN-10W6		Cable type	ÖLFLEX CLASSIC 110				
Function text			No. of conductors	3G		Cross-section 1		Cable length
Function text	Page / column	Target designation from	Connection point	Conductor	Target designation to	Connection point	Page / column	Function text
				1				
				2				
				GNYE				
	/10.6	-10X4	4:1	BN	+HBC-Y31	x1	/10.6	
	/10.6	-10X4	4:3	BU	+HBC-Y31	x2	/10.6	
	/10.6		x1	BU	+HBC-Y31	x2	/10.6	

Cable name	=EDM+MCBN-11W0		Cable type	DK-HSB-RJ45-05				
Function text			No. of conductors			Cross-section		Cable length
Function text	Page / column	Target designation from	Connection point	Conductor	Target designation to	Connection point	Page / column	Function text
	/11.0	+NMC1-11A0-ETH	1		-11X0	1	/11.0	
	/11.0	+NMC1-11A0-ETH	2		-11X0	2	/11.0	
	/11.0	+NMC1-11A0-ETH	3		-11X0	3	/11.0	
	/11.0	+NMC1-11A0-ETH	4		-11X0	4	/11.0	
	/11.0	+NMC1-11A0-ETH	5		-11X0	5	/11.0	
	/11.1	+NMC1-11A0-ETH	6		-11X0	6	/11.0	
	/11.1	+NMC1-11A0-ETH	6		-11X0	7	/11.0	
	/11.1	+NMC1-11A0-ETH	7		-11X0	8	/11.0	

Cable diagram

F09_002

Cable name	=EDM+MCBN-11W1		Cable type	DK-HSB-RJ45-70				
Function text			No. of conductors			Cross-section		Cable length
Function text	Page / column	Target designation from	Connection point	Conductor	Target designation to	Connection point	Page / column	Function text
	/11.2	+NMC1-11A0-HSB-1	HSB_H		-11A3	HSB_H	/11.3	
	/11.2	+NMC1-11A0-HSB-1	GND		-11A3	GND	/11.3	
	/11.2	+NMC1-11A0-HSB-1	HSB_L		-11A3	HSB_L	/11.3	

Cable name	=EDM+MCBN-11W2		Cable type					
Function text			No. of conductors	8G		Cross-section	0,25	Cable length 4
Function text	Page / column	Target designation from	Connection point	Conductor	Target designation to	Connection point	Page / column	Function text
	/11.3	-11X2	4:1	BK	+NMC1-11A0	PE	/11.2	
	/11.2	-11X2	2:3	BN	+NMC1-11A0	2	/11.2	
	/31.1	-11X2	5:3	GN	-9X6.B	5	/31.1	
	/31.2	-11X2	6:3	GY	-9X6.B	3	/31.2	
	/31.2	-11X2	6:1	PK	-9X6.B	2	/31.2	
	/31a.2	-11X2	6:1	PK	-9X6.B	2	/31a.2	
	/11.2	-11X2	2:1	WH	+NMC1-11A0	5	/11.2	
	/31.1	-11X2	5:1	YE	-9X6.B	4	/31.1	
	/31a.1	-11X2	5:1	YE	-9X6.B	4	/31a.1	

Cable name	=EDM+MCBN-11W3		Cable type	DK-1080-002				
Function text			No. of conductors			Cross-section		Cable length
Function text	Page / column	Target designation from	Connection point	Conductor	Target designation to	Connection point	Page / column	Function text
	/11.2	-11X2	2	1	-11A3	24V	/11.3	
	/11.2	-11X2	2	2	-11A3	0V	/11.3	

Cable name	=EDM+MCBN-11W4		Cable type	DK-HSB-RJ45-05				
Function text			No. of conductors			Cross-section		Cable length
Function text	Page / column	Target designation from	Connection point	Conductor	Target designation to	Connection point	Page / column	Function text
	/11.4	-11A3	HSB_H		-11A5	HSB_H	/11.6	
	/11.4	-11A3	GND		-11A5	GND	/11.6	

Cable diagram

F09_002

Cable name	=EDM+MCBN-11W4		Cable type	DK-HSB-RJ45-05					
Function text			No. of conductors			Cross-section		Cable length	
Function text	Page / column	Target designation from	Connection point	Conductor	Target designation to	Connection point	Page / column	Function text	
	/11.4	-11A3	HSB_L		-11A5	HSB_L	/11.6		

Cable name	=EDM+MCBN-11W5		Cable type	DK-1080-002					
Function text			No. of conductors			Cross-section		Cable length	
Function text	Page / column	Target designation from	Connection point	Conductor	Target designation to	Connection point	Page / column	Function text	
	/11.5	-11X2	2:4	1	-11A5	24V	/11.6		
	/11.5	-11X2	2:2	2	-11A5	0V	/11.6		

Cable name	=EDM+MCBN-11W6		Cable type	DK-HSB-RJ45-05					
Function text			No. of conductors			Cross-section		Cable length	
Function text	Page / column	Target designation from	Connection point	Conductor	Target designation to	Connection point	Page / column	Function text	
	/11.6	-11A5	HSB_H		-11A8	HSB_H	/11.8		
	/11.6	-11A5	GND		-11A8	GND	/11.8		
	/11.6	-11A5	HSB_L		-11A8	HSB_L	/11.8		

Cable name	=EDM+MCBN-11W8		Cable type	DK-1080-002					
Function text			No. of conductors			Cross-section		Cable length	
Function text	Page / column	Target designation from	Connection point	Conductor	Target designation to	Connection point	Page / column	Function text	
	/11.7	-11X2	3:4	1	-11A8	24V	/11.8		
	/11.7	-11X2	3:2	2	-11A8	0V	/11.8		

Cable name	=EDM+MCBN-12W1		Cable type	DK-1080-002					
Function text			No. of conductors			Cross-section		Cable length	
Function text	Page / column	Target designation from	Connection point	Conductor	Target designation to	Connection point	Page / column	Function text	
	/12.1	-11X2	5:4	1	-12A1	24V	/12.1		
	/12.1	-11X2	5:2	2	-12A1	0V	/12.1		

Cable diagram

F09_002

Cable name =EDM+MCBN-13W4			Cable type LIYCY					
Function text			No. of conductors 12			Cross-section 0,25		Cable length
Function text	Page / column	Target designation from	Connection point	Conductor	Target designation to	Connection point	Page / column	Function text
	/11	-13A3-COM2	1		-COM2	1	/11	
	/11	-13A3-COM2	6		-COM2	6	/11	
	/11	-13A3-COM2	9		-COM2	9	/11	
	/11.0	-13A3-COM2	1		+NMC1-11A0-COM1	1	/11.0	
	/11.1	-13A3-COM2	6		+NMC1-11A0-COM1	6	/11.1	
	/11.1	-13A3-COM2	2		+NMC1-11A0-COM1	2	/11.1	
	/11.1	-13A3-COM2	7		+NMC1-11A0-COM1	7	/11.1	
	/11.1	-13A3-COM2	3		+NMC1-11A0-COM1	3	/11.1	
	/11.1	-13A3-COM2	8		+NMC1-11A0-COM1	8	/11.1	
	/11.1	-13A3-COM2	4		+NMC1-11A0-COM1	4	/11.1	
	/11.1	-13A3-COM2	9		+NMC1-11A0-COM1	9	/11.1	
	/11.1	-13A3-COM2	5		+NMC1-11A0-COM1	5	/11.1	
	/13.4	-13A3-COM2	1		+NMC1-11A0-COM1	1	/13.5	
	/13.4	-13A3-COM2	6		+NMC1-11A0-COM1	6	/13.5	
	/13.4	-13A3-COM2	2		+NMC1-11A0-COM1	2	/13.5	
	/13.4	-13A3-COM2	7		+NMC1-11A0-COM1	7	/13.5	
	/13.4	-13A3-COM2	3		+NMC1-11A0-COM1	3	/13.5	
	/13.4	-13A3-COM2	8		+NMC1-11A0-COM1	8	/13.5	
	/13.4	-13A3-COM2	4		+NMC1-11A0-COM1	4	/13.5	
	/13.4	-13A3-COM2	9		+NMC1-11A0-COM1	9	/13.5	
	/13.4	-13A3-COM2	5		+NMC1-11A0-COM1	5	/13.5	

Cable name =EDM+MCBN-15W1			Cable type DK-1079-002					
Function text			No. of conductors 16			Cross-section		Cable length
Function text	Page / column	Target designation from	Connection point	Conductor	Target designation to	Connection point	Page / column	Function text
	/15.1	-15X0	10:2		-11A3-XV	1	/15.1	
	/15.2	-15X0	2:4		-11A3-XV	2	/15.2	

Cable diagram

F09_002

Cable name	=EDM+MCBN-15W1		Cable type	DK-1079-002				
Function text			No. of conductors	16		Cross-section		Cable length
Function text	Page / column	Target designation from	Connection point	Conductor	Target designation to	Connection point	Page / column	Function text
	/15.2	-15X0	3:4		-11A3-XV	10	/15.2	
	/15.3	-15X0	4:4		-11A3-XV	3	/15.3	
	/15.3	-15X0	5:4		-11A3-XV	11	/15.3	
	/15.4	-15X0	3:2		-11A3-XV	9	/15.4	
	/15.4	-15X0	4:2		-11A3-XV	15	/15.4	
	/15.4	-15X0	7:4		-11A3-XV	16	/15.4	
	/15.5	-15X0	6:4		-11A3-XV	8	/15.5	
	/15.5	-15X0	9:2		-11A3-XV	7	/15.5	
	/15.6	-15X0	5:2		-11A3-XV	12	/15.6	
	/15.6	-15X0	8:4		-11A3-XV	5	/15.6	
	/15.7	-15X0	9:4		-11A3-XV	13	/15.7	
	/15.7	-15X0	10:4		-11A3-XV	6	/15.7	
	/15.7	-15X0	11:4		-11A3-XV	14	/15.7	
	/15.8	-15X0	8:2		-11A3-XV	4	/15.8	

Cable name	=EDM+MCBN-15W2		Cable type	UNITRONIC® LiYCY				
Function text			No. of conductors	4		Cross-section	0,5	Cable length
Function text	Page / column	Target designation from	Connection point	Conductor	Target designation to	Connection point	Page / column	Function text
	/15.2	-15X0	3:3	WH	+HBL-Y1-Y24	1	/15.2	
	/15.2	-15X0	2:3	BN	+HBL-Y1-Y24	2	/15.2	
				GN				
				YE				
				SH				
	/15.2	-15X0	1	GN	-15X0	1:2	/15.1	
	/15.3	-15X0	1	GN	-15X0	1	/15.2	

Cable diagram

F09_002

Cable name	=EDM+MCBN-15W3		Cable type	UNITRONIC® LiYCY				
Function text			No. of conductors	4		Cross-section	0,5	Cable length
Function text	Page / column	Target designation from	Connection point	Conductor	Target designation to	Connection point	Page / column	Function text
	/15.3	-15X0	5:3	WH	+HBL-Y1-Y25	1	/15.3	
	/15.3	-15X0	4:3	BN	+HBL-Y1-Y25	2	/15.3	
				GN				
				YE				
				SH				
	/15.3	-15X0	1	GN	-15X0	12	/15.4	

Cable name	=EDM+MCBN-15W4		Cable type	UNITRONIC® LiYCY				
Function text			No. of conductors	4		Cross-section	0,5	Cable length
Function text	Page / column	Target designation from	Connection point	Conductor	Target designation to	Connection point	Page / column	Function text
	/15.4	-15X0	7:3	WH	+HBC-Y28	1	/15.4	
	/15.5	-15X0	6:3	BN	+HBC-Y28	2	/15.4	
				GN				
				YE				
				SH				

Cable name	=EDM+MCBN-15W6		Cable type	UNITRONIC® LiYCY				
Function text			No. of conductors	4		Cross-section	0,5	Cable length
Function text	Page / column	Target designation from	Connection point	Conductor	Target designation to	Connection point	Page / column	Function text
	/15.7	-15X0	9:3	WH	+HBR-Y2-Y26	1	/15.7	
	/15.6	-15X0	8:3	BN	+HBR-Y2-Y26	2	/15.7	
				GN				
				YE				
				SH				
	/15.6	-15X0	12	GN	-15X0	12	/15.4	
	/15.8	-15X0	12	GN	-15X0	12	/15.6	

Cable diagram

F09_002

Cable name	=EDM+MCBN-15W7		Cable type	UNITRONIC® LiYCY				
Function text			No. of conductors	4		Cross-section	0,5	Cable length
Function text	Page / column	Target designation from	Connection point	Conductor	Target designation to	Connection point	Page / column	Function text
	/15.7	-15X0	11:3	WH	+HBR-Y2-Y27	1	/15.7	
	/15.7	-15X0	10:3	BN	+HBR-Y2-Y27	2	/15.8	
				GN				
				YE				
				SH				

Cable name	=EDM+MCBN-16W2		Cable type	LIYCY FLEX				
Function text			No. of conductors	12		Cross-section	0,25	Cable length
Function text	Page / column	Target designation from	Connection point	Conductor	Target designation to	Connection point	Page / column	Function text
	/16.6	-16X2	5:3	BK	-11A3-X1		/16.6	
	/16.2	-16X2	7:1	BU	-11A3-X1		/16.2	
	/16.6	-16X2	6:3	GN	-11A3-X1		/16.6	
	/16.4	-16X2	2:1	GY	-11A3-X1		/16.4	
	/16.3	-16X2	1:1	PK	-11A3-X1		/16.3	
	/16.8	-16X2	6:1	RD	-11A3-X1		/16.8	
	/16.5	-16X2	4:3	VT	-11A3-X1		/16.5	
	/16.5	-16X2	3:1	WH	-11A3-X1		/16.5	
	/16.7	-16X2	7:3	YE	-11A3-X1		/16.7	

Cable name	=EDM+MCBN-17W2		Cable type	LIYCY FLEX				
Function text			No. of conductors	12		Cross-section	0,25	Cable length
Function text	Page / column	Target designation from	Connection point	Conductor	Target designation to	Connection point	Page / column	Function text
	/17.2	-17X2	5:1		-11A3-X2		/17.2	
	/17.3	-17X2	1:3		-11A3-X2		/17.3	
	/17.4	-17X2	1:1		-11A3-X2		/17.4	
	/17.5	-17X2	2:3		-11A3-X2		/17.5	
	/17.5	-17X2	3:3		-11A3-X2		/17.5	
	/17.6	-17X2	4:3		-11A3-X2		/17.6	

Cable diagram

F09_002

Cable name	=EDM+MCBN-17W2		Cable type	LIYCY FLEX				
Function text			No. of conductors	12		Cross-section	0,25	Cable length
Function text	Page / column	Target designation from	Connection point	Conductor	Target designation to	Connection point	Page / column	Function text
	/17.6	-17X2	5:3		-11A3-X2		/17.6	
	/17.8	-17X2	4:1		-11A3-X2		/17.8	

Cable name	=EDM+MCBN-18W2		Cable type	LIYCY FLEX				
Function text			No. of conductors	12		Cross-section	0,25	Cable length
Function text	Page / column	Target designation from	Connection point	Conductor	Target designation to	Connection point	Page / column	Function text
	/18.3	-18X2	4:3	BN	-11A3-X3		/18.3	
	/18.2	-18X2	6:1		-11A3-X3		/18.2	
	/18.3	-18X2	1:1		-11A3-X3		/18.3	
	/18.4	-18X2	2:1		-11A3-X3		/18.4	
	/18.5	-18X2	5:3		-11A3-X3		/18.5	
	/18.6	-18X2	6:3		-11A3-X3		/18.6	
	/18.6	-18X2	3:3		-11A3-X3		/18.6	
	/18.8	-18X2	5:1		-11A3-X3		/18.8	

Cable name	=EDM+MCBN-19W2		Cable type	LIYCY FLEX				
Function text			No. of conductors	12		Cross-section	0,25	Cable length
Function text	Page / column	Target designation from	Connection point	Conductor	Target designation to	Connection point	Page / column	Function text
	/19.6	-19X2	2:3	BK	-11A5-X1		/19.6	
	/19.2	-19X2	5:1	BU	-11A5-X1		/19.2	
	/19.6	-19X2	1:1	GN	-11A5-X1		/19.6	
	/19.4	-19X2	2:1	GY	-11A5-X1		/19.4	
	/19.3	-19X2	5:3	PK	-11A5-X1		/19.3	
	/19.8	-19X2	4:1	RD	-11A5-X1		/19.8	
	/19.5	-19X2	1:3	VT	-11A5-X1		/19.5	
	/19.5	-19X2	3:1	WH	-11A5-X1		/19.5	
	/19.7	-19X2	4:3	YE	-11A5-X1		/19.7	

Cable diagram

F09_002

Cable name	=EDM+MCBN-19W3		Cable type	ELITRONIC-CY LIYCY				
Function text			No. of conductors	3		Cross-section	0,14	Cable length
Function text	Page / column	Target designation from	Connection point	Conductor	Target designation to	Connection point	Page / column	Function text
				SH				
	/19.3	-19X2	3:4	WH	-19S3		/19.3	
				BN				
				GN				
	/19.3	-19X2	4:2	BN	-19S3		/19.3	

Cable name	=EDM+MCBN-19W4		Cable type	ELITRONIC-CY LIYCY				
Function text			No. of conductors	3		Cross-section	0,14	Cable length
Function text	Page / column	Target designation from	Connection point	Conductor	Target designation to	Connection point	Page / column	Function text
				SH				
	/19.3	-19X2	5:4	WH	-19S4		/19.4	
				BN				
				GN				
	/19.4	-19X2	3:2	BN	-19S4		/19.4	

Cable name	=EDM+MCBN-20W2		Cable type	LIYCY FLEX				
Function text			No. of conductors	12		Cross-section	0,25	Cable length
Function text	Page / column	Target designation from	Connection point	Conductor	Target designation to	Connection point	Page / column	Function text
	/20.2	-20X2	3:1		-11A5-X3		/20.2	
	/20.4	-20X2	1:1		-11A5-X3		/20.4	
	/20.5	-20X2	1:3		-11A5-X3		/20.5	
	/20.7	-20X2	2:3		-11A5-X3		/20.7	
	/20.8	-20X2	2:1		-11A5-X3		/20.8	

Cable name	=EDM+MCBN-21W2		Cable type	LIYCY FLEX				
Function text			No. of conductors	12		Cross-section	0,25	Cable length
Function text	Page / column	Target designation from	Connection point	Conductor	Target designation to	Connection point	Page / column	Function text
	/21.6	-21X2	4:3	BK	-11A8-X1		/21.6	

Cable diagram

F09_002

Cable name	=EDM+MCBN-21W2		Cable type	LIYCY FLEX				
Function text			No. of conductors	12		Cross-section	0,25	Cable length
Function text	Page / column	Target designation from	Connection point	Conductor	Target designation to	Connection point	Page / column	Function text
	/21.2	-21X2	5:1	BU	-11A8-X1		/21.2	
	/21.4	-21X2	2:3	GY	-11A8-X1		/21.4	
	/21.3	-21X2	5:3	PK	-11A8-X1		/21.3	
	/21.8	-21X2	4:1	RD	-11A8-X1		/21.8	
	/21.5	-21X2	3:3	WH	-11A8-X1		/21.5	
	/21.7	-21X2	1	YE	-11A8-X1		/21.7	

Cable name	=EDM+MCBN-22W2		Cable type	LIYCY FLEX				
Function text			No. of conductors	12		Cross-section	0,25	Cable length
Function text	Page / column	Target designation from	Connection point	Conductor	Target designation to	Connection point	Page / column	Function text
	/22.2	-22X2	5:1	BU	-11A8-X3		/22.2	
	/22.4	-22X2	2:3	GY	-11A8-X3		/22.4	
	/22.8	-22X2	4:1	RD	-11A8-X3		/22.8	
	/22.5	-22X2	3:3	WH	-11A8-X3		/22.5	
	/22.7	-22X2	1:3	YE	-11A8-X3		/22.7	

Cable name	=EDM+MCBN-23W2		Cable type	LIYCY FLEX				
Function text			No. of conductors	12		Cross-section	0,25	Cable length
Function text	Page / column	Target designation from	Connection point	Conductor	Target designation to	Connection point	Page / column	Function text
	/23.2	-23X2	5:1	BU	-12A1-X1		/23.2	
	/23.6	-23X2	1:3	GN	-12A1-X1		/23.6	
	/23.4	-23X2	3:3	GY	-12A1-X1		/23.4	
	/23.8	-23X2	4:1	RD	-12A1-X1		/23.8	
	/23.5	-23X2	4:3	WH	-12A1-X1		/23.5	
	/23.7	-23X2	2:3	YE	-12A1-X1		/23.7	

Cable diagram

F09_002

Cable name	=EDM+MCBN-24W2		Cable type	LIYCY FLEX				
Function text			No. of conductors	12		Cross-section	0,25	Cable length
Function text	Page / column	Target designation from	Connection point	Conductor	Target designation to	Connection point	Page / column	Function text
	/24.2	-24X2	5:1	BU	-12A1-X3		/24.2	
	/24.6	-24X2	1:3	GN	-12A1-X3		/24.6	
	/24.4	-24X2	4:3	GY	-12A1-X3		/24.4	
	/24.8	-24X2	4:1	RD	-12A1-X3		/24.8	
	/24.5	-24X2	3:3	WH	-12A1-X3		/24.5	
	/24.7	-24X2	2:3	YE	-12A1-X3		/24.7	

Cable name	=EDM+MCBN-25W1		Cable type	UNITRONIC® LiYCY				
Function text			No. of conductors	4		Cross-section	0,34	Cable length
Function text	Page / column	Target designation from	Connection point	Conductor	Target designation to	Connection point	Page / column	Function text
	/25.2	-11A3-XB		WH	+HBL-Y1-LVDTY1	2	/15.2	
	/32.4	-13A3-E05	+	BN	+HBL-Y1-LVDTY1	4	/15.2	
	/25.2	-11A3-XB		GN	+HBL-Y1-LVDTY1	1	/15.1	
	/25.3	-11A3-XB		YE	+HBL-Y1-LVDTY1	3	/15.2	
				SH				

Cable name	=EDM+MCBN-25W6		Cable type	UNITRONIC® LiYCY				
Function text			No. of conductors	4		Cross-section	0,34	Cable length
Function text	Page / column	Target designation from	Connection point	Conductor	Target designation to	Connection point	Page / column	Function text
	/25.7	-11A3-XB		WH	+HBR-Y2-LVDTY2	2	/15.8	
	/32.5	-13A3-E05	+	BN	+HBR-Y2-LVDTY2	4	/15.8	
	/25.6	-11A3-XB		GN	+HBR-Y2-LVDTY2	1	/15.8	
	/25.8	-11A3-XB		YE	+HBR-Y2-LVDTY2	3	/15.8	
				SH				

Cable diagram

F09_002

Cable name	=EDM+MCBN-26W0		Cable type	UNITRONIC® LiYCY				
Function text			No. of conductors	12		Cross-section	0,25	Cable length
Function text	Page / column	Target designation from	Connection point	Conductor	Target designation to	Connection point	Page / column	Function text
				WH				
	/26.0	-41X0	5:4	BN	-11A3-XA		/26.0	
				GN				
	/26.1	-41X0	6:4	YE	-11A3-XA		/26.1	
				GY				
	/26.6	-7X1	1:4	PK	-11A3-XA		/26.6	
	/26.7	-7X1	2:4	BU	-11A3-XA		/26.7	
	/26.7	-7X1	3:4	RD	-11A3-XA		/26.7	
				BK				
				VT				
				GYPK				
				RDBU				
				SH				
	/26.0	-41X0	5	BN	-41X0	5:4	/41.4	
	/26.1	-41X0	6	YE	-41X0	6:4	/41.5	

Cable name	=EDM+MCBN-27W0		Cable type	UNITRONIC® LiYCY				
Function text			No. of conductors	4		Cross-section	0,5	Cable length
Function text	Page / column	Target designation from	Connection point	Conductor	Target designation to	Connection point	Page / column	Function text
				WH				
	/27.0	-42X1	5:4	BN	-11A5-XA		/27.0	
				GN				
	/27.1	-42X1	6:4	YE	-11A5-XA		/27.1	
				SH				
	/27.0	-42X1	5	BN	-42X1	5:4	/42.4	
	/27.1	-42X1	6	YE	-42X1	6:4	/42.5	

Cable diagram

F09_002

Cable name	=EDM+MCBN-27W5		Cable type	UNITRONIC® LiYCY				
Function text			No. of conductors	4		Cross-section	0,5	Cable length
Function text	Page / column	Target designation from	Connection point	Conductor	Target designation to	Connection point	Page / column	Function text
				WH				
	/27.5	-43X0	5:4	BN	-11A5-XA		/27.5	
				GN				
				YE				
				SH				
	/27.5	-43X0	5	BN	-43X0	5:4	/43.4	
	/27.6	-43X0	6:4		-11A5-XA		/27.6	
	/27.6	-43X0	6		-43X0	6:4	/43.5	

Cable name	=EDM+MCBN-28W0		Cable type	UNITRONIC® LiYCY				
Function text			No. of conductors	4		Cross-section	0,5	Cable length
Function text	Page / column	Target designation from	Connection point	Conductor	Target designation to	Connection point	Page / column	Function text
	/28.6	-45X1	6:4	WH	-11A8-XA		/28.6	
	/28.0	-44X0	5:4	BN	-11A8-XA		/28.0	
	/28.5	-45X1	5:4	GN	-11A8-XA		/28.5	
	/28.1	-44X0	6:4	YE	-11A8-XA		/28.1	
				SH				
	/28.0	-44X0	5	BN	-44X0	5:4	/44.4	
	/28.5	-45X1	5	GN	-45X1	5:4	/45.4	
	/28.6	-45X1	6	WH	-45X1	6:4	/45.5	
	/28.1	-44X0	6	YE	-44X0	6:4	/44.5	

Cable name	=EDM+MCBN-29W0		Cable type	LIYCY				
Function text			No. of conductors	4		Cross-section	0,34	Cable length
Function text	Page / column	Target designation from	Connection point	Conductor	Target designation to	Connection point	Page / column	Function text
	/29.0	-12A1-XA		BN	-5A0-CN1		/46.4	
	/29.1	-12A1-XA		YE	-5A0-CN1		/46.4	

Cable diagram

F09_002

Cable name	=EDM+MCBN-29W5		Cable type	LIYCY				
Function text			No. of conductors	4		Cross-section	0,34	Cable length
Function text	Page / column	Target designation from	Connection point	Conductor	Target designation to	Connection point	Page / column	Function text
	/29.5	-12A1-XA		BN	-5A4-CN1		/48.4	
	/29.6	-12A1-XA		YE	-5A4-CN1		/48.4	

Cable name	=EDM+MCBN-30W7		Cable type	LIYCY FLEX				
Function text			No. of conductors	4		Cross-section	0,25	Cable length
Function text	Page / column	Target designation from	Connection point	Conductor	Target designation to	Connection point	Page / column	Function text
	/30.8	-6X1	9:3	BN	+DS1-30S7	BN	/30.8	
	/30.9	-6X1	10:3	BN	+DS2-30S8	BN	/30.9	
	/30.8	-9X1	2:3	GN	+DS2-30S8	GN	/30.8	
	/30.9	-9X1	1:3	GN		GN	/30.9	
	/30.8	-13A3-E03	+	WH	+DS1-30S7	WH	/30.8	
	/30.9	-13A3-E03	+	WH	+DS2-30S8	WH	/30.9	
-	/30.8	-13A3-E03	-	YE	+DS2-30S8	YE	/30.8	
-	/30.9	-13A3-E03	-	YE		YE	/30.9	

Cable name	=EDM+MCBN-32W0		Cable type	UNITRONIC® LiYCY				
Function text			No. of conductors	4		Cross-section	0,5	Cable length
Function text	Page / column	Target designation from	Connection point	Conductor	Target designation to	Connection point	Page / column	Function text
	/32.1	-32X1	1:1	WH	+HBL-32B0	4	/32.1	
	/32.1	-32X1	5:1	BN	+HBL-32B0	1	/32.1	
				GN				
				YE				
				SH				
	/32.1	-32X1	4:1	GN	+HBL-32B0-PE	3	/32.1	
	/32.1	-32H1	x1	WH	+HBL-32B0	4	/32.1	

Cable diagram

F09_002

Cable name	=EDM+MCBN-32W2		Cable type	UNITRONIC® LiYCY				
Function text			No. of conductors	4		Cross-section	0,5	Cable length
Function text	Page / column	Target designation from	Connection point	Conductor	Target designation to	Connection point	Page / column	Function text
	/32.2	-32X1	2:1	WH	+HBR-32B1	4	/32.2	
	/32.2	-32X1	5:3	BN	+HBR-32B1	1	/32.2	
				GN				
				YE				
				SH				
	/32.2	-32X1	4:1	GN	+HBR-32B1-PE	3	/32.2	
	/32.2	-32H2	x1	WH	+HBR-32B1	4	/32.2	

Cable name	=EDM+MCBN-32W3		Cable type	UNITRONIC® LiYCY				
Function text			No. of conductors	4		Cross-section	0,5	Cable length
Function text	Page / column	Target designation from	Connection point	Conductor	Target designation to	Connection point	Page / column	Function text
	/32.3	-32X1	3:1	WH	+HBC-32B3	4	/32.3	
	/32.3	-32X1	6:1	BN	+HBC-32B3	1	/32.3	
				GN				
				YE				
				SH				
	/32.4	-32X1	4:1	GN	+HBC-32B3-PE	3	/32.3	
	/32.4	-32H4	x1	WH	+HBC-32B3	4	/32.3	

Cable name	=EDM+MCBN-35W0		Cable type	H05W-F				
Function text			No. of conductors	3G		Cross-section	1	Cable length
Function text	Page / column	Target designation from	Connection point	Conductor	Target designation to	Connection point	Page / column	Function text
	/35.1	-32X1	8:1	BN	+HBL-Y21	x1	/35.1	
	/35.1	-32X1	8:1	BN		x2	/35.1	
	/35.1	-32X1	8:3	BU	+HBL-Y21	x2	/35.1	
	/35.1	-32X1	7:1	GNYE	+HBL-Y21	PE	/35.1	

Cable diagram

F09_002

Cable name	=EDM+MCBN-35W2		Cable type	H05W-F				
Function text			No. of conductors	3G		Cross-section	1	Cable length
Function text	Page / column	Target designation from	Connection point	Conductor	Target designation to	Connection point	Page / column	Function text
	/35.2	-32X1	9:1	BN	+HBC-Y23	x1	/35.2	
	/35.2	-32X1	9:1	BN		x2	/35.3	
	/35.2	-32X1	9:3	BU	+HBC-Y23	x2	/35.2	
	/35.2	-32X1	7:1	GNYE	+HBC-Y23	PE	/35.2	

Cable name	=EDM+MCBN-35W3		Cable type	H05W-F				
Function text			No. of conductors	3G		Cross-section	1	Cable length
Function text	Page / column	Target designation from	Connection point	Conductor	Target designation to	Connection point	Page / column	Function text
	/35.3	-32X1	10:1	BN	+HBR-Y22	x1	/35.3	
	/35.3	-32X1	10:1	BN		x2	/35.4	
	/35.3	-32X1	10:3	BU	+HBR-Y22	x2	/35.3	
	/35.4	-32X1	7:1	GNYE	+HBR-Y22	PE	/35.3	

Cable name	=EDM+MCBN-38W1		Cable type	UNITRONIC® LiYCY				
Function text			No. of conductors	12		Cross-section	0,25	Cable length
Function text	Page / column	Target designation from	Connection point	Conductor	Target designation to	Connection point	Page / column	Function text
	/38.4	-33X9	11:3	WH	+SCCT-38A1-2		/38.1	
	/38.4	-33X9	12:1	BN	+SCCT-38A1	1	/38.1	
				GN				
				SH				
	/38a.4	-33X9	2:3	WH	+SCCT-38A1	2	/38a.2	
	/38a.3	-33X9	1:3	BN	+SCCT-38A1	1	/38a.2	
				GN				
				YE				
				GY				
				PK				
	/38a.4	-33X9	12:3	BU	+SCCT-38A1	4	/38a.2	
				RD				

Cable diagram

F09_002

Cable name	=EDM+MCBN-38W1		Cable type	UNITRONIC® LiYCY				
Function text			No. of conductors	12		Cross-section	0,25	Cable length
Function text	Page / column	Target designation from	Connection point	Conductor	Target designation to	Connection point	Page / column	Function text
				BK				
				VT				
				GYPK				
				RDBU				
				SH				
	/38b.4	-33X9	2:3	WH	+SCCT-38A1	2	/38b.2	
	/38b.3	-33X9	1:3	BN	+SCCT-38A1	1	/38b.2	
				GN				
				YE				
				GY				
				PK				
	/38b.4	-33X9	12:3	BU	+SCCT-38A1	4	/38b.2	
				RD				
				BK				
				VT				
				GYPK				
				RDBU				
				SH				
	/38.2	-33X9	13:1	GN	+SCCT-38A1-6		/38.2	
	/38a.2	-33X9	13:1	GN	+SCCT-38A1	5	/38a.2	
	/38b.2	-33X9	13:1	GN	+SCCT-38A1	5	/38b.2	

Cable name	=EDM+MCBN-38W3		Cable type	OLFLEX 110				
Function text			No. of conductors	21G		Cross-section	0,5	Cable length
Function text	Page / column	Target designation from	Connection point	Conductor	Target designation to	Connection point	Page / column	Function text
	/38a.3	-33X9	1:4	1	+SCCR-38A3	1H	/38a.3	
	/38b.3	-33X9	1:4	1	+SCCR-38A3	1H	/38b.3	

Cable diagram

F09_002

Cable name =EDM+MCBN-38W3			Cable type OLFLEX 110					
Function text			No. of conductors 21G			Cross-section 0,5		Cable length
Function text	Page / column	Target designation from	Connection point	Conductor	Target designation to	Connection point	Page / column	Function text
	/38.4	-33X9	4:2	2	+SCCR-38A3	2	/38.4	
	/38a.4	-33X9	2:4	2	+SCCR-38A3	2H	/38a.4	
	/38b.4	-33X9	2:4	2	+SCCR-38A3	2H	/38b.4	
	/38a.4	-33X9	3:4	3	+SCCR-38A3	3H	/38a.4	
	/38b.4	-33X9	3:4	3	+SCCR-38A3	3H	/38b.4	
	/38a.6	-33X9	8:2	4	+SCCR-38A3	4H	/38a.6	
	/38b.6	-33X9	8:2	4	+SCCR-38A3	4H	/38b.6	
	/38a.7	-33X9	9:2	5	+SCCR-38A3	5H	/38a.7	
	/38b.7	-33X9	9:2	5	+SCCR-38A3	5H	/38b.7	
	/38.4	-33X9	12:4	6	+SCCR-38A3	6	/38.4	
	/38a.5	-33X9	11:2	6	+SCCR-38A3	6H	/38a.5	
	/38b.5	-33X9	11:2	6	+SCCR-38A3	6H	/38b.5	
	/38.6	-33X9	9:2	7	+SCCR-38A3	7	/38.6	
	/38a.4	-33X9	2:2	7	+SCCR-38A3	7H	/38a.4	
	/38b.4	-33X9	2:2	7	+SCCR-38A3	7H	/38b.4	
	/38.7	-33X9	8:4	8	+SCCR-38A3	8	/38.7	
	/38a.5	-33X9	3:2	8	+SCCR-38A3	8H	/38a.5	
	/38b.5	-33X9	3:2	8	+SCCR-38A3	8H	/38b.5	
	/38.5	-33X9	5:2	9	+SCCR-38A3	9	/38.5	
	/38a.4	-33X9	4:2	9	+SCCR-38A3	9H	/38a.4	
	/38b.4	-33X9	4:2	9	+SCCR-38A3	9H	/38b.4	
	/38.6	-33X9	7:2	10	+SCCR-38A3	10	/38.6	
	/38a.6	-39X2	7:1	10	+SCCR-38A3	10H	/38a.6	
	/38b.6	-39X2	7:1	10	+SCCR-38A3	10H	/38b.6	
	/38.6	-33X9	6:2	11	+SCCR-38A3	11	/38.6	
	/38a.4	-33X9	12:2	11	+SCCR-38A3	11H	/38a.4	
	/38b.4	-33X9	12:2	11	+SCCR-38A3	11H	/38b.4	

Cable diagram

F09_002

Cable name =EDM+MCBN-38W3			Cable type OLFLEX 110					
Function text			No. of conductors 21G			Cross-section 0,5		Cable length
Function text	Page / column	Target designation from	Connection point	Conductor	Target designation to	Connection point	Page / column	Function text
	/38.5	-33X9	10:2	15	+SCCR-38A3	15	/38.5	
	/38a.5	-33X9	10:2	16	+SCCR-38A3	5V	/38a.5	
	/38b.5	-33X9	10:2	16	+SCCR-38A3	5V	/38b.5	
	/38a.5	-33X9	1:2	17	+SCCR-38A3	4V	/38a.5	
	/38b.5	-33X9	1:2	17	+SCCR-38A3	4V	/38b.5	
	/38a.6	-33X9	7:2	18	+SCCR-38A3	3V	/38a.6	
	/38b.6	-33X9	7:2	18	+SCCR-38A3	3V	/38b.6	
	/38a.5	-33X9	5:2	19	+SCCR-38A3	2V	/38a.5	
	/38b.5	-33X9	5:2	19	+SCCR-38A3	2V	/38b.5	
	/38a.5	-33X9	6:2	20	+SCCR-38A3	1V	/38a.5	
	/38b.5	-33X9	6:2	20	+SCCR-38A3	1V	/38b.5	
	/38a.7	-33X9	13:2	GNYE	+SCCR-38A3	14H	/38a.7	
	/38b.7	-33X9	13:2	GNYE	+SCCR-38A3	14H	/38b.7	
	/38.4	-33X9	11:4		+SCCR-38A3-5		/38.4	
	/38.4	-33X9	2:2		+SCCR-38A3-13		/38.4	
	/38.5	-33X9	3:2		+SCCR-38A3-14		/38.5	
	/38.5	-33X9	1:2		+SCCR-38A3-12		/38.5	
	/38.6	-33X9	11:2		+SCCR-38A3-20		/38.6	
	/38.6	-39X2	7:1		+SCCR-38A3-3		/38.6	
	/38.7	-33X9	13:2		+SCCR-38A3-1		/38.7	

Cable name =EDM+MCBN-39W2			Cable type OP-COAXIAL					
Function text			No. of conductors 4			Cross-section		Cable length 10
Function text	Page / column	Target designation from	Connection point	Conductor	Target designation to	Connection point	Page / column	Function text
	/39.2	-39X2	2:1	BN	+LBT-39A3	1	/39.3	
	/39.6	+LBR-39A5	3	BN	+LBT-39A3	1	/39.3	
	/39.2	-39X2	8:1	BU	+LBT-39A3	3	/39.3	

Cable diagram

F09_002

Cable name	=EDM+MCBN-39W7		Cable type	OP-COAXIAL				
Function text			No. of conductors	8		Cross-section		Cable length 3
Function text	Page / column	Target designation from	Connection point	Conductor	Target designation to	Connection point	Page / column	Function text
	/39.6	+LBR-39A5	2	BN	+LBR-39A5	3	/39.6	
	/39.7	-39X2	9:1	BU	+LBR-39A5	7	/39.6	
	/39.6	+LBR-39A5	5	GY	+LBR-39A5	8	/39.6	
	/39.8	-9X5	11:1	PK	+LBR-39A5	6	/39.6	
	/39.8	-9X5	10:1	RD	+LBR-39A5	8	/39.6	

Cable name	=EDM+MCBN-41W1		Cable type	LIYCY				
Function text			No. of conductors	12		Cross-section 0,25		Cable length
Function text	Page / column	Target designation from	Connection point	Conductor	Target designation to	Connection point	Page / column	Function text
	/41.3	-41X0	3:1	BK	-3A1-CN1		/41.3	
	/41.4	-41X0	5:3	BN	-3A1-CN1		/41.4	
	/41.1	-41X0	7:1	BU	-3A1-CN1		/41.1	
	/41.1	-3A1-CN1		BU	-3A1-CN1		/41.4	
	/41.2	-41X0	2:1	GN	-3A1-CN1		/41.2	
	/41.2	-41X0	1:1	PK	-3A1-CN1		/41.2	
	/41.1	-41X0	5:1	RD	-3A1-CN1		/41.1	
	/41.3	-41X0	4:1	VT	-3A1-CN1		/41.3	
	/41.5	-41X0	6:3	YE	-3A1-CN1		/41.5	

Cable name	=EDM+MCBN-41W3		Cable type					
Function text			No. of conductors			Cross-section		Cable length
Function text	Page / column	Target designation from	Connection point	Conductor	Target designation to	Connection point	Page / column	Function text
	/41.3	-41X0	3:2	BN	-41S3	12	/41.3	
	/41.3	-41X0	5:2	BU	-41S3	11	/41.3	

Cable diagram

F09_002

Cable name =EDM+MCBN-41W3.1			Cable type					
Function text			No. of conductors			Cross-section		Cable length
Function text	Page / column	Target designation from	Connection point	Conductor	Target designation to	Connection point	Page / column	Function text
	/41.3	-41X0	4:4	BN	-41S3.1	12	/41.3	
	/41.3	-41X0	6:2	BU	-41S3.1	11	/41.3	
Cable name =EDM+MCBN-41W6			Cable type LIYCY					
Function text			No. of conductors 12			Cross-section 0,25		Cable length
Function text	Page / column	Target designation from	Connection point	Conductor	Target designation to	Connection point	Page / column	Function text
	/41.8	-11A3-XE3		BK	-3A1-CN1		/41.8	
	/41.8	-11A3-XE3		BN	-3A1-CN1		/41.8	
	/41.7	-11A3-XE3		GN	-3A1-CN1		/41.7	
	/41.6	-11A3-XE3		GY	-3A1-CN1		/41.6	
	/41.9	-11A3-XE3		PK	-3A1-CN1		/41.9	
	/41.7	-11A3-XE3		RD	-3A1-CN1		/41.7	
	/41.6	-11A3-XE3		YE	-3A1-CN1		/41.6	
Cable name =EDM+MCBN-42W1			Cable type LIYCY					
Function text			No. of conductors 12			Cross-section 0,25		Cable length
Function text	Page / column	Target designation from	Connection point	Conductor	Target designation to	Connection point	Page / column	Function text
	/42.3	-42X1	3:1	BK	-3A4-CN1		/42.3	
	/42.4	-42X1	5:3	BN	-3A4-CN1		/42.4	
	/42.1	-42X1	7:1	BU	-3A4-CN1		/42.1	
	/42.1	-3A4-CN1		BU	-3A4-CN1		/42.4	
	/42.2	-42X1	2:1	GN	-3A4-CN1		/42.2	
	/42.2	-42X1	1:1	PK	-3A4-CN1		/42.2	
	/42.1	-42X1	5:1	RD	-3A4-CN1		/42.1	
	/42.5	-42X1	7:3	RDBU	-3A4-CN1		/42.5	
	/42.3	-42X1	4:1	VT	-3A4-CN1		/42.3	
	/42.5	-42X1	6:3	YE	-3A4-CN1		/42.5	

Cable diagram

F09_002

Cable name	=EDM+MCBN-42W3		Cable type					
Function text			No. of conductors			Cross-section		Cable length
Function text	Page / column	Target designation from	Connection point	Conductor	Target designation to	Connection point	Page / column	Function text
	/42.3	-42X1	4:2	BN	-42S3	12	/42.3	
	/42.3	-42X1	6:2	BU	-42S3	11	/42.3	

Cable name	=EDM+MCBN-42W3.1		Cable type					
Function text			No. of conductors			Cross-section		Cable length
Function text	Page / column	Target designation from	Connection point	Conductor	Target designation to	Connection point	Page / column	Function text
	/42.3	-42X1	3:4	BN	-42S3.1	12	/42.3	
	/42.3	-42X1	5:2	BU	-42S3.1	11	/42.3	

Cable name	=EDM+MCBN-42W6		Cable type	LIYCY				
Function text			No. of conductors	12		Cross-section	0,25	Cable length
Function text	Page / column	Target designation from	Connection point	Conductor	Target designation to	Connection point	Page / column	Function text
	/42.8	-11A5-XE1		BK	-3A4-CN1		/42.8	
	/42.8	-11A5-XE1		BN	-3A4-CN1		/42.8	
	/42.7	-11A5-XE1		GN	-3A4-CN1		/42.7	
	/42.6	-11A5-XE1		GY	-3A4-CN1		/42.6	
	/42.9	-11A5-XE1		PK	-3A4-CN1		/42.9	
	/42.7	-11A5-XE1		RD	-3A4-CN1		/42.7	
	/42.6	-11A5-XE1		YE	-3A4-CN1		/42.6	

Cable name	=EDM+MCBN-43W0		Cable type	LIYCY				
Function text			No. of conductors	12		Cross-section	0,25	Cable length
Function text	Page / column	Target designation from	Connection point	Conductor	Target designation to	Connection point	Page / column	Function text
	/43.3	-43X0	4:1	BK	-3A7-CN1		/43.3	
	/43.4	-43X0	5:3	BN	-3A7-CN1		/43.4	
	/43.1	-43X0	7:1	BU	-3A7-CN1		/43.1	
	/43.1	-3A7-CN1		BU	-3A7-CN1		/43.4	
	/43.2	-43X0	2:1	GN	-3A7-CN1		/43.2	

Cable diagram

F09_002

Cable name	=EDM+MCBN-43W0		Cable type	LIYCY				
Function text			No. of conductors	12		Cross-section	0,25	Cable length
Function text	Page / column	Target designation from	Connection point	Conductor	Target designation to	Connection point	Page / column	Function text
	/43.2	-43X0	1:1	PK	-3A7-CN1		/43.2	
	/43.1	-43X0	5:1	RD	-3A7-CN1		/43.1	
	/43.3	-43X0	3:1	VT	-3A7-CN1		/43.3	
	/43.5	-43X0	6:3		-3A7-CN1		/43.5	

Cable name	=EDM+MCBN-43W3		Cable type	UNITRONIC® LiYCY				
Function text			No. of conductors	4		Cross-section	0,5	Cable length
Function text	Page / column	Target designation from	Connection point	Conductor	Target designation to	Connection point	Page / column	Function text
	/43.3	-43X0	6:2	WH	-43S3.1	11	/43.3	
	/43.3	-43X0	3:4	BN	-43S3.1	12	/43.3	
	/43.3	-43X0	4:2	GN	-43S3	12	/43.3	
	/43.3	-43X0	5:2	YE	-43S3	11	/43.3	
				SH				

Cable name	=EDM+MCBN-43W6		Cable type	LIYCY				
Function text			No. of conductors	12		Cross-section	0,25	Cable length
Function text	Page / column	Target designation from	Connection point	Conductor	Target designation to	Connection point	Page / column	Function text
	/43.8	-11A5-XE2		BK	-3A7-CN1		/43.8	
	/43.8	-11A5-XE2		BN	-3A7-CN1		/43.8	
	/43.7	-11A5-XE2		GN	-3A7-CN1		/43.7	
	/43.6	-11A5-XE2		GY	-3A7-CN1		/43.6	
	/43.9	-11A5-XE2		PK	-3A7-CN1		/43.9	
	/43.7	-11A5-XE2		RD	-3A7-CN1		/43.7	
	/43.6	-11A5-XE2		YE	-3A7-CN1		/43.6	

Cable diagram

F09_002

Cable name	=EDM+MCBN-44W0		Cable type	LIYCY				
Function text			No. of conductors	12		Cross-section	0,25	Cable length
Function text	Page / column	Target designation from	Connection point	Conductor	Target designation to	Connection point	Page / column	Function text
	/44.3	-44X0	4:1	BK	-4A1-CN1		/44.3	
	/44.4	-44X0	5:3	BN	-4A1-CN1		/44.4	
	/44.1	-44X0	7:1	BU	-4A1-CN1		/44.1	
	/44.1	-4A1-CN1		BU	-4A1-CN1		/44.4	
	/44.2	-44X0	2:1	GN	-4A1-CN1		/44.2	
	/44.2	-44X0	1:1	PK	-4A1-CN1		/44.2	
	/44.1	-44X0	5:1	RD	-4A1-CN1		/44.1	
	/44.3	-44X0	3:1	VT	-4A1-CN1		/44.3	
	/44.5	-44X0	6:3	YE	-4A1-CN1		/44.5	

Cable name	=EDM+MCBN-44W3		Cable type					
Function text			No. of conductors			Cross-section		Cable length
Function text	Page / column	Target designation from	Connection point	Conductor	Target designation to	Connection point	Page / column	Function text
	/44.3	-44X0	3:4	BN	-44S3	12	/44.3	
	/44.3	-44X0	6:2	BU	-44S3	11	/44.3	

Cable name	=EDM+MCBN-44W6		Cable type	LIYCY				
Function text			No. of conductors	12		Cross-section	0,25	Cable length
Function text	Page / column	Target designation from	Connection point	Conductor	Target designation to	Connection point	Page / column	Function text
	/44.8	-11A8-XE1		BK	-4A1-CN1		/44.8	
	/44.8	-11A8-XE1		BN	-4A1-CN1		/44.8	
	/44.7	-11A8-XE1		GN	-4A1-CN1		/44.7	
	/44.6	-11A8-XE1		GY	-4A1-CN1		/44.6	
	/44.9	-11A8-XE1		PK	-4A1-CN1		/44.9	
	/44.7	-11A8-XE1		RD	-4A1-CN1		/44.7	
	/44.6	-11A8-XE1		YE	-4A1-CN1		/44.6	

Cable diagram

F09_002

Cable name	=EDM+MCBN-45W0		Cable type	LIYCY				
Function text			No. of conductors	12		Cross-section	0,25	Cable length
Function text	Page / column	Target designation from	Connection point	Conductor	Target designation to	Connection point	Page / column	Function text
	/45.3	-45X1	3:1	BK	-4A4-CN1		/45.3	
	/45.4	-45X1	5:3	BN	-4A4-CN1		/45.4	
	/45.1	-45X1	7:1	BU	-4A4-CN1		/45.1	
	/45.1	-4A4-CN1		BU	-4A4-CN1		/45.4	
	/45.2	-45X1	2:1	GN	-4A4-CN1		/45.2	
	/45.2	-45X1	1:1	PK	-4A4-CN1		/45.2	
	/45.1	-45X1	5:1	RD	-4A4-CN1		/45.1	
	/45.3	-45X1	4:1	VT	-4A4-CN1		/45.3	
	/45.5	-45X1	6:3	YE	-4A4-CN1		/45.5	

Cable name	=EDM+MCBN-45W3		Cable type					
Function text			No. of conductors			Cross-section		Cable length
Function text	Page / column	Target designation from	Connection point	Conductor	Target designation to	Connection point	Page / column	Function text
	/45.3	-45X1	3:4	BN	-45S3	12	/45.3	
	/45.3	-45X1	6:2	BU	-45S3	11	/45.3	

Cable name	=EDM+MCBN-45W6		Cable type	LIYCY				
Function text			No. of conductors	12		Cross-section	0,25	Cable length
Function text	Page / column	Target designation from	Connection point	Conductor	Target designation to	Connection point	Page / column	Function text
	/45.8	-11A8-XE2		BK	-4A4-CN1		/45.8	
	/45.8	-11A8-XE2		BN	-4A4-CN1		/45.8	
	/45.7	-11A8-XE2		GN	-4A4-CN1		/45.7	
	/45.6	-11A8-XE2		GY	-4A4-CN1		/45.6	
	/45.9	-11A8-XE2		PK	-4A4-CN1		/45.9	
	/45.7	-11A8-XE2		RD	-4A4-CN1		/45.7	
	/45.6	-11A8-XE2		YE	-4A4-CN1		/45.6	

Cable diagram

F09_002

Cable name	=EDM+MCBN-46W2		Cable type					
Function text			No. of conductors			Cross-section		Cable length
Function text	Page / column	Target designation from	Connection point	Conductor	Target designation to	Connection point	Page / column	Function text
	/46.2	-46X2	1:2	BN	-46S2	12	/46.2	Parking limit switch
	/46.2	-46X2	3:2	WH	-46S2	11	/46.2	Parking limit switch

Cable name	=EDM+MCBN-47W4		Cable type	LIYCY				
Function text			No. of conductors	12		Cross-section	0,25	Cable length
Function text	Page / column	Target designation from	Connection point	Conductor	Target designation to	Connection point	Page / column	Function text
	/47.6	-12A1-XE1		BK	-5A0-CN5		/47.6	
	/47.4	-12A1-XE1		BN	-5A0-CN5		/47.4	
	/47.7	-12A1-XE1		GN	-5A0-CN5		/47.7	
	/47.6	-12A1-XE1		GY	-5A0-CN5		/47.6	
	/47.5	-12A1-XE1		PK	-5A0-CN5		/47.5	
	/47.7	-12A1-XE1		RD	-5A0-CN5		/47.7	
	/47.8	-12A1-XE1		YE	-5A0-CN5		/47.8	

Cable name	=EDM+MCBN-48W2		Cable type					
Function text			No. of conductors			Cross-section		Cable length
Function text	Page / column	Target designation from	Connection point	Conductor	Target designation to	Connection point	Page / column	Function text
	/48.2	-46X2	2:2	BN	-48S2	12	/48.2	Parking limit switch
	/48.2	-46X2	4:2	WH	-48S2	11	/48.2	Parking limit switch

Cable name	=EDM+MCBN-49W4		Cable type	LIYCY				
Function text			No. of conductors	12		Cross-section	0,25	Cable length
Function text	Page / column	Target designation from	Connection point	Conductor	Target designation to	Connection point	Page / column	Function text
	/49.6	-12A1-XE2		BK	-5A4-CN5		/49.6	
	/49.4	-12A1-XE2		BN	-5A4-CN5		/49.4	
	/49.7	-12A1-XE2		GN	-5A4-CN5		/49.7	
	/49.6	-12A1-XE2		GY	-5A4-CN5		/49.6	
	/49.5	-12A1-XE2		PK	-5A4-CN5		/49.5	

Cable diagram

F09_002

Cable name =EDM+MCBN-49W4			Cable type LIYCY					
Function text			No. of conductors 12			Cross-section 0,25		Cable length
Function text	Page / column	Target designation from	Connection point	Conductor	Target designation to	Connection point	Page / column	Function text
	/49.7	-12A1-XE2		RD	-5A4-CN5		/49.7	
	/49.8	-12A1-XE2		YE	-5A4-CN5		/49.8	

Cable name =EDM+LED-2AW2			Cable type					
Function text			No. of conductors			Cross-section		Cable length
Function text	Page / column	Target designation from	Connection point	Conductor	Target designation to	Connection point	Page / column	Function text
	+MCBN/2a.2	-2AU1	GND	BK/BU	-2AU2	3	+MCBN/2a.2	
	+MCBN/2a.2	-2AU1	VCC	BN/YE	-2AU2	1	+MCBN/2a.2	
	+MCBN/2a.3	-2AU1	CH1	GN/PK	-2AU2	5	+MCBN/2a.3	
	+MCBN/2a.2	-2AU1	GND	GY/WH	-2AU2	4	+MCBN/2a.2	
	+MCBN/2a.2	-2AU1	VCC	RD/BU	-2AU2	2	+MCBN/2a.2	
	+MCBN/2a.3	-2AU1	CH2	VT/PK	-2AU2	6	+MCBN/2a.3	

Terminal-strip overview

F14_001

Terminal strip	Terminal strip definition text	Terminals					Graphical page of terminal diagrams
		first	last	Total PE	Total N	Total number	
=EDM+MCBN-1X0		1	4	4	0	22	
=EDM+MCBN-1X1		1	3	0	0	28	
=EDM+MCBN-1X2		2	1	6	0	42	
=EDM+MCBN-1X6		1	5	8	0	26	
=EDM+MCBN-2X4		1	2	0	0	6	
=EDM+MCBN-3X0		1	2	0	0	6	
=EDM+MCBN-3X3		1	2	0	0	6	
=EDM+MCBN-3X6		1	2	0	0	6	
=EDM+MCBN-4X0		1	2	0	0	6	
=EDM+MCBN-4X3		1	2	0	0	6	
=EDM+MCBN-6X0				0	0	34	
=EDM+MCBN-6X1		1		0	0	121	
=EDM+MCBN-7X0		1	6	0	0	149	
=EDM+MCBN-7X1		1	3	0	0	39	
=EDM+MCBN-9X1		1		0	0	85	
=EDM+MCBN-9X5		1	13	0	0	59	
=EDM+MCBN-10X4		1	7	2	0	25	
=EDM+MCBN-11X2		1	3	2	0	46	
=EDM+MCBN-14X7		1	2	0	0	6	
=EDM+MCBN-15X0		2	1	2	0	36	
=EDM+MCBN-16X2		1	7	0	0	23	
=EDM+MCBN-17X2		1	5	0	0	19	
=EDM+MCBN-18X2		1	6	0	0	22	
=EDM+MCBN-19X2		1	5	0	0	26	
=EDM+MCBN-20X2		1	3	0	0	11	
=EDM+MCBN-21X2		1	5	0	0	16	
=EDM+MCBN-22X2		1	5	0	0	15	
=EDM+MCBN-23X2		1	5	0	0	16	
=EDM+MCBN-24X2		1	5	0	0	16	
=EDM+MCBN-32X1		1		2	0	32	
=EDM+MCBN-33X9		1	13	2	0	118	
=EDM+MCBN-39X2		1	5	2	0	114	
=EDM+MCBN-41X0		1	8	2	0	30	
=EDM+MCBN-41X2		3	4	0	0	9	
=EDM+MCBN-42X1		1	3	0	0	29	
=EDM+MCBN-43X0		1	8	2	0	30	
=EDM+MCBN-44X0		1	8	2	0	27	

Terminal-strip overview

F14_001

Terminal strip	Terminal strip definition text	Terminals					Graphical page of terminal diagrams
		first	last	Total PE	Total N	Total number	
=EDM+MCBN-45X1		1	3	0	0	28	
=EDM+MCBN-46X2		1	6	0	0	22	