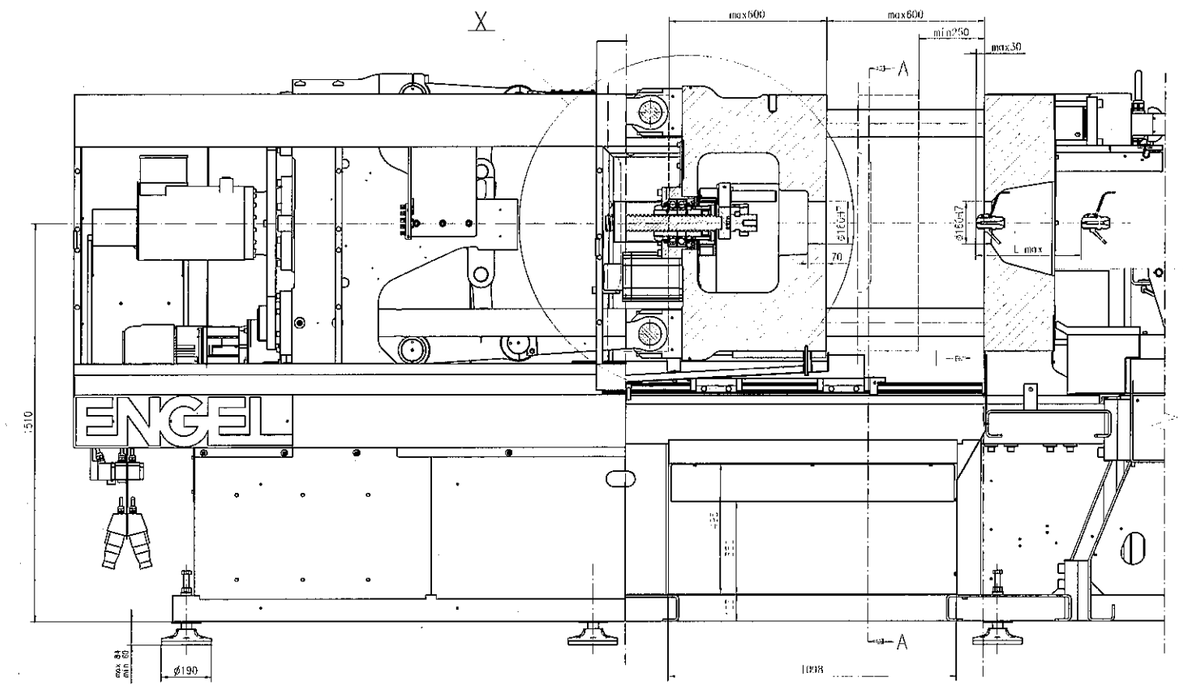

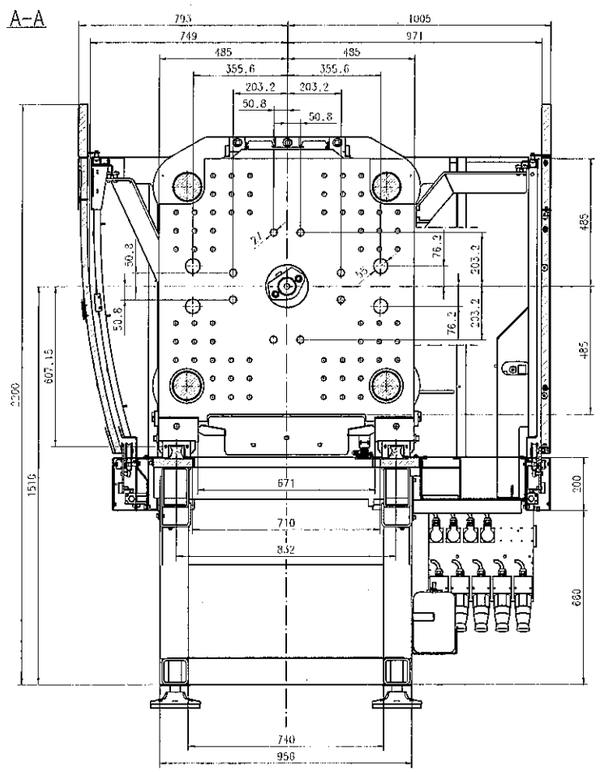

X
Auswerfersituation e-motion
Ejector situation

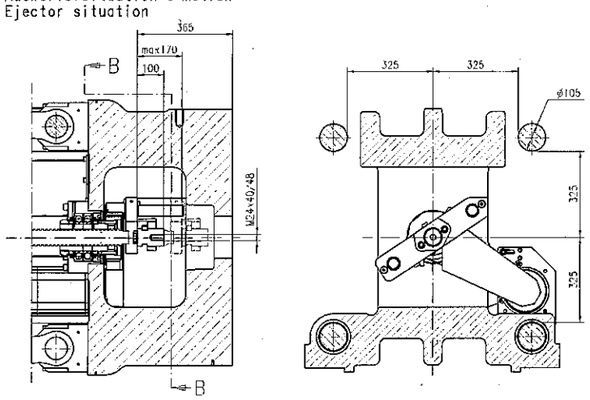

X
Auswerfersituation SPEED
Ejector situation

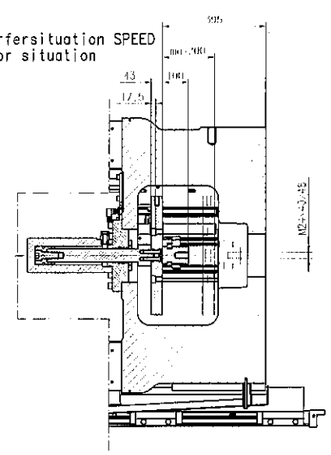

X
Auswerferkraft erhöht 220[kN]
Ejector force increased 220[KN]

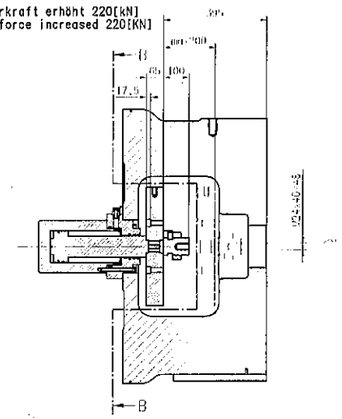

B-B
M 1:10

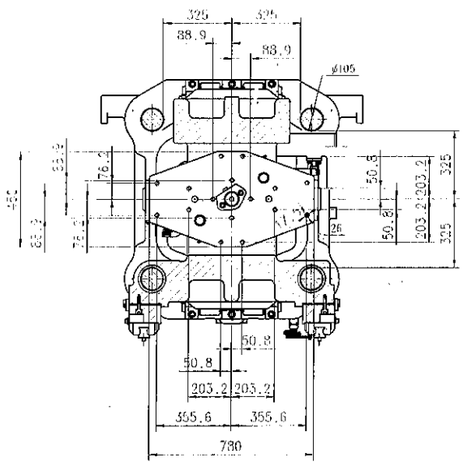

I

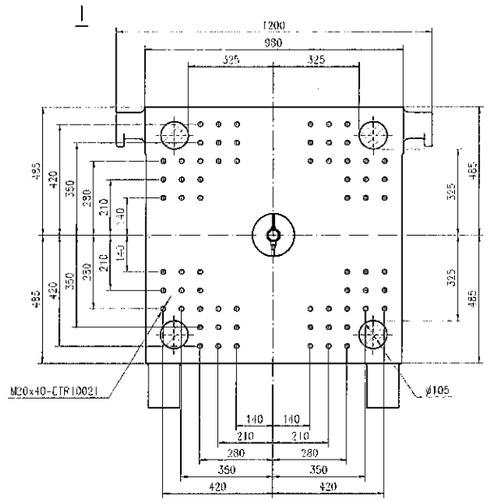

TYPE	DÜSENWEG NOZZLE STROKE Lmax (mm)
Speed 280/40,45	360
Speed 280/50,55	465
Speed 280/60,70	537

TYPE	DÜSENWEG NOZZLE STROKE Lmax (mm)
EM 940/280T	400
EM 1340/280T	400
EM 1640/280T	400

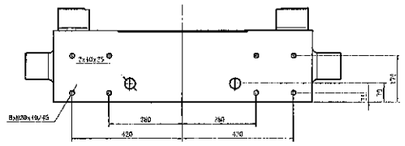

PLATEN LAYOUT
WERKZEGAUFSPANNMASSE

5191-904-29-00-008

00 | 1/1 | FR | 2008-05-19

ISO 1302 (1993)

EMS-WLCservice

0312-904-29-00

ENGEL