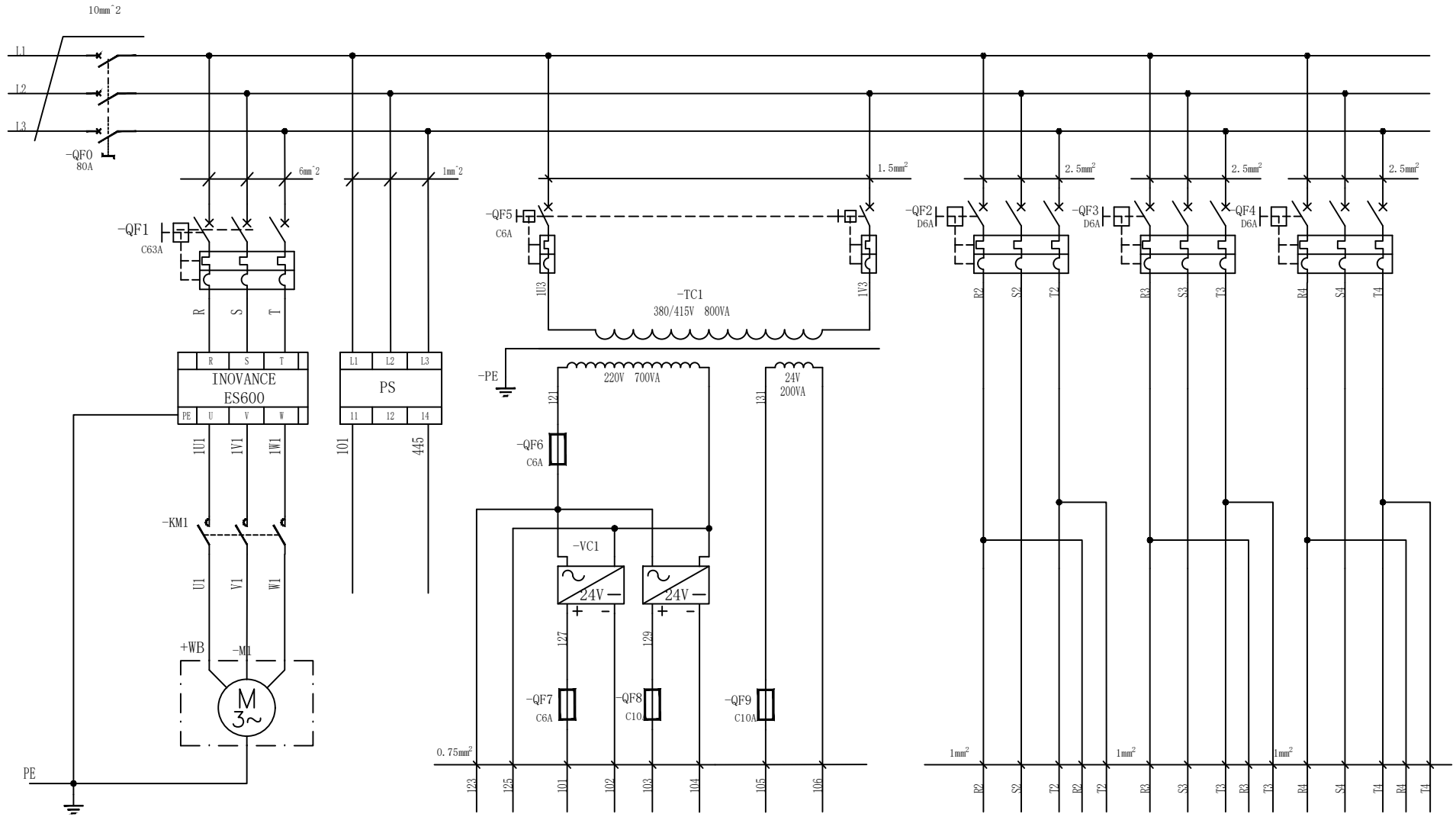
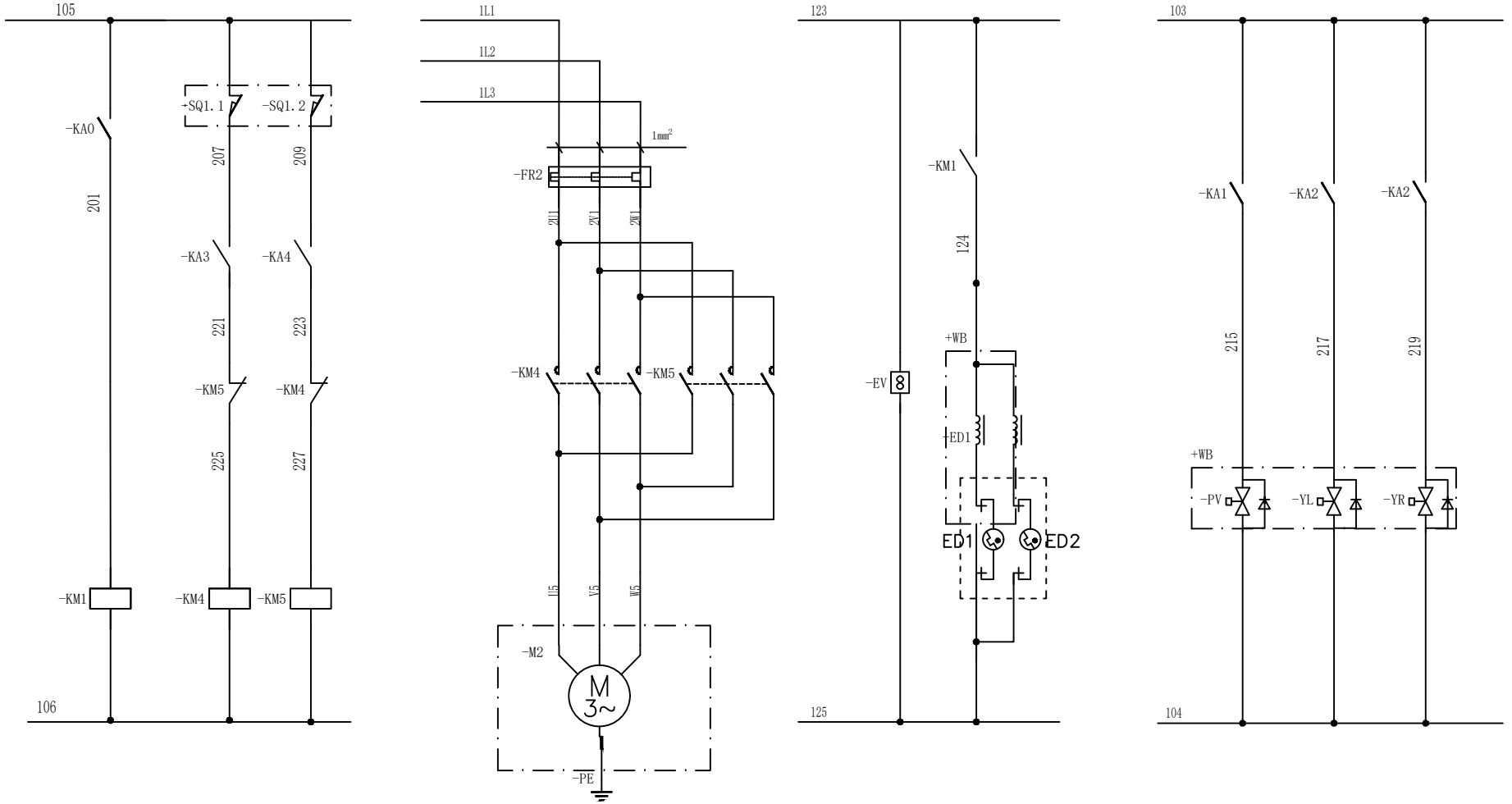
Power Swith	Pump Motor 18KW	Phase relay	Fan power	CNC power	Valve power	AC24V power	X1/X2 servo	R1/R2 servo	Z1/Z2 servo



| | | |

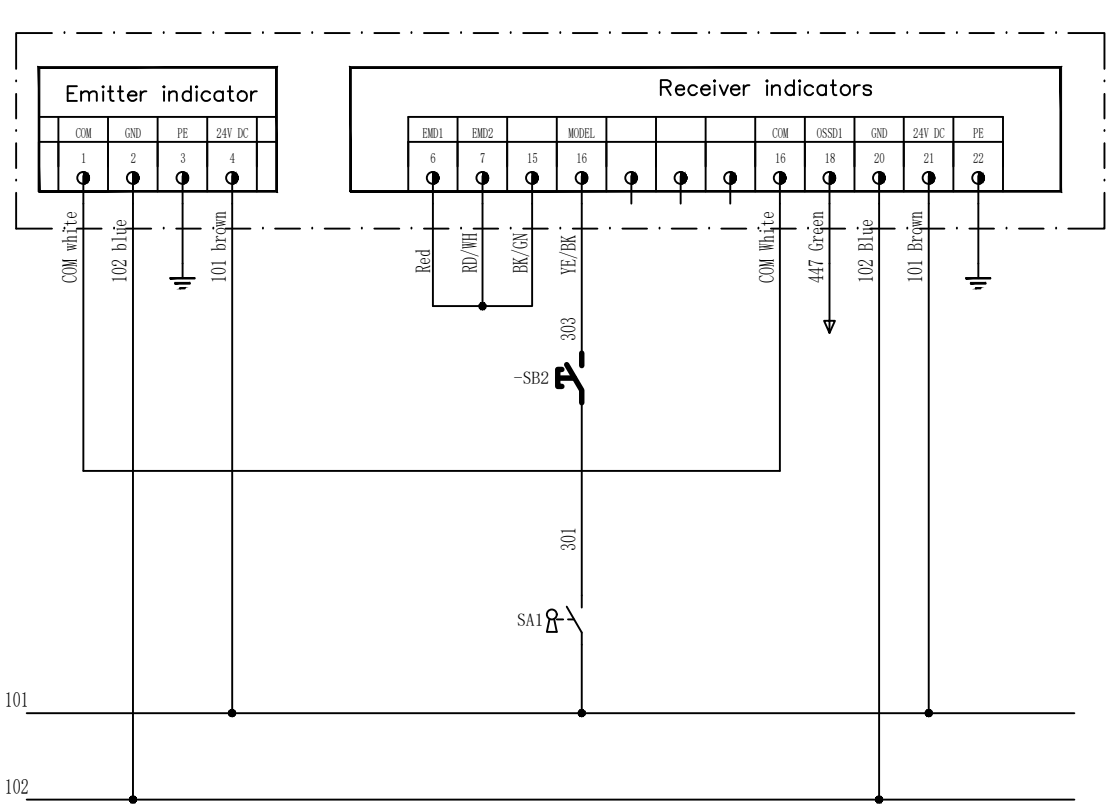
Pump start	Crowning control	Fan Light	Valve control

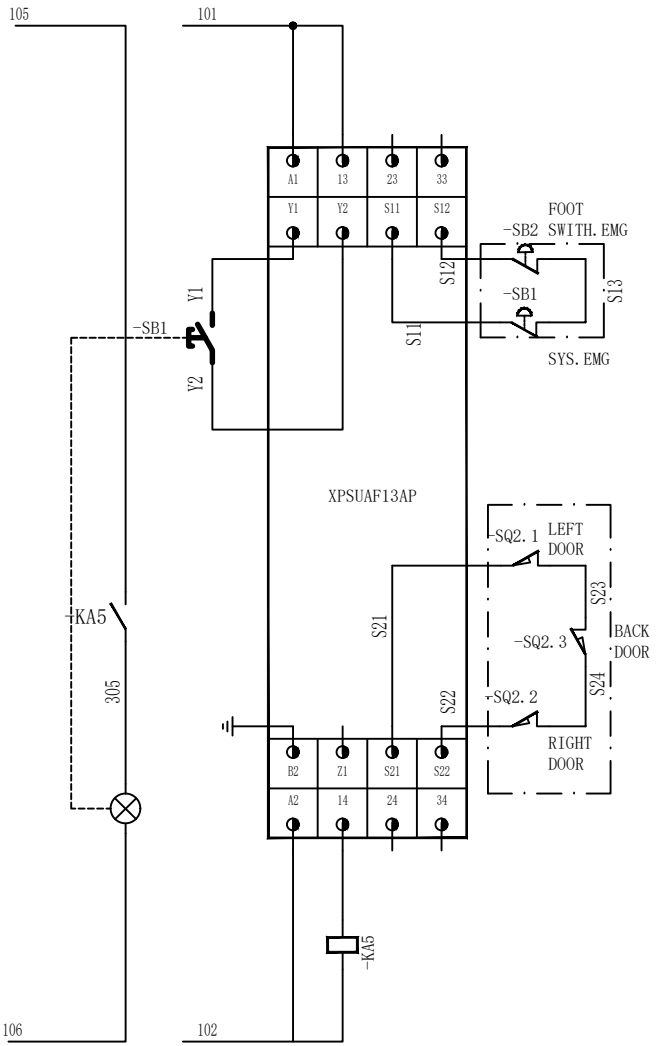


| | | |

LAZER SAFE

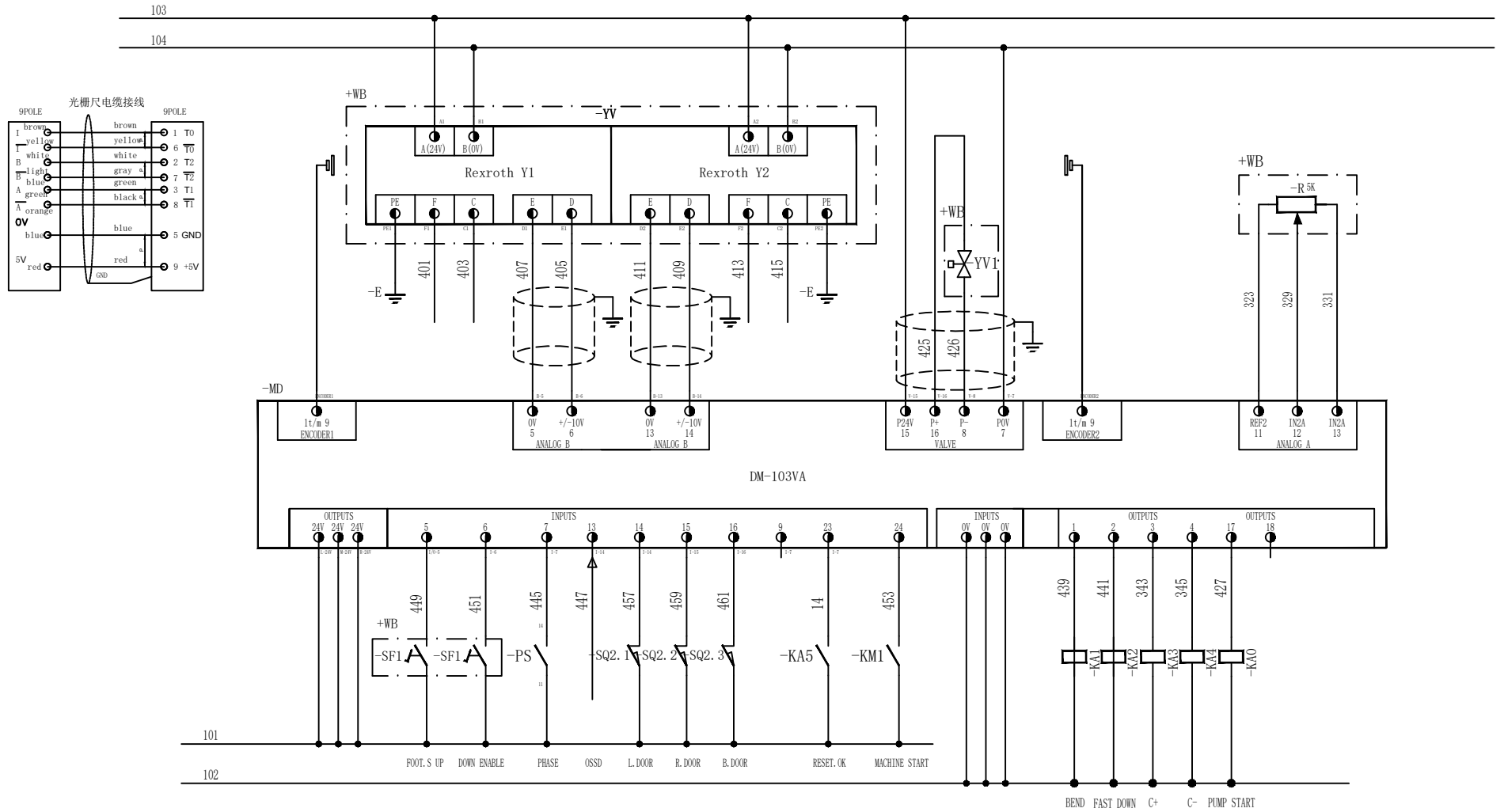
SAFETY MODULE





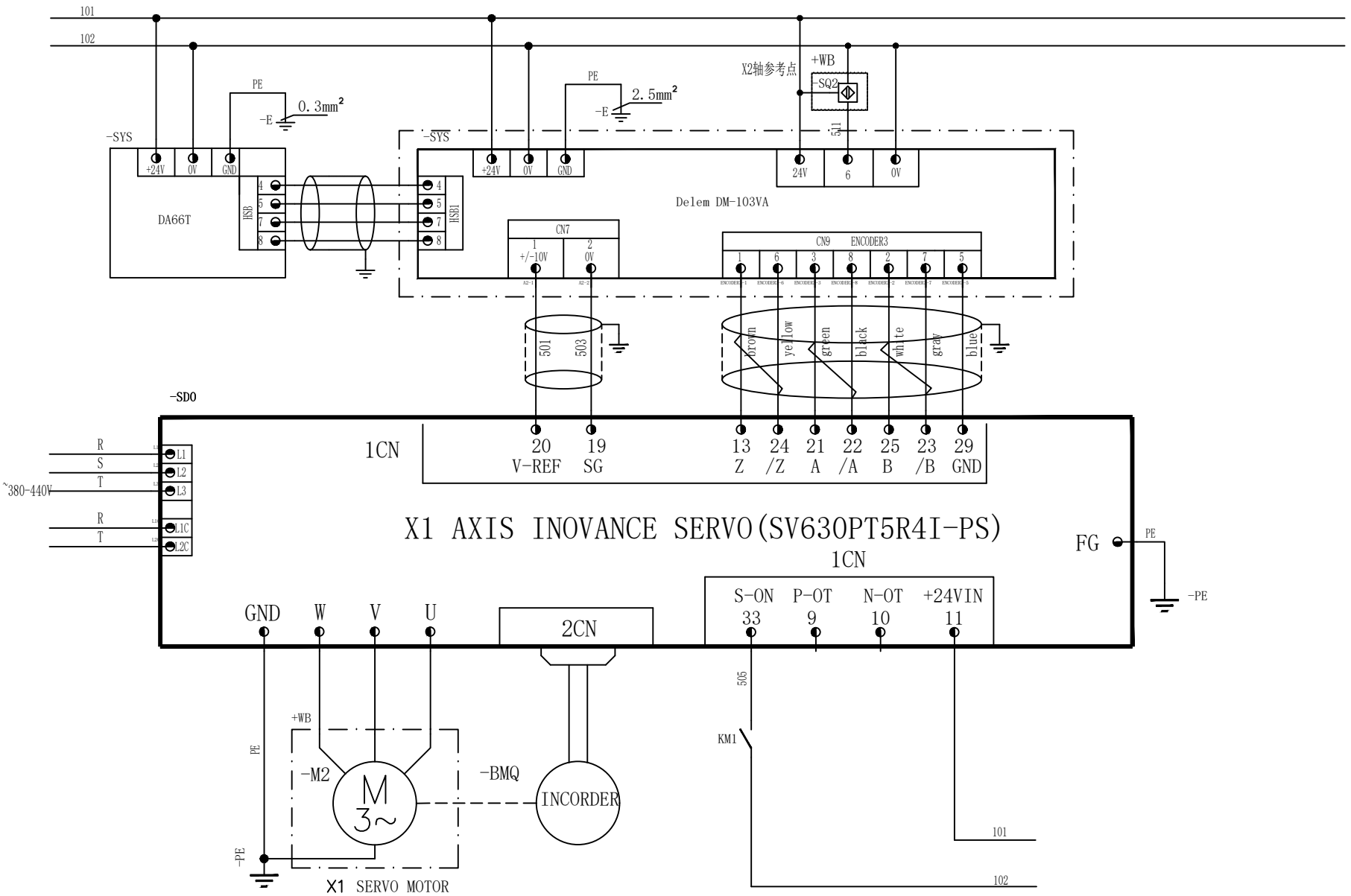
P-Y1Y2X1X2R1R2Z1Z2C-DA66T	NJSL-003	12
	+A	3

Y1 Proportion valve	Y2 Proportion valve	Pressure valve	Crowning feedback



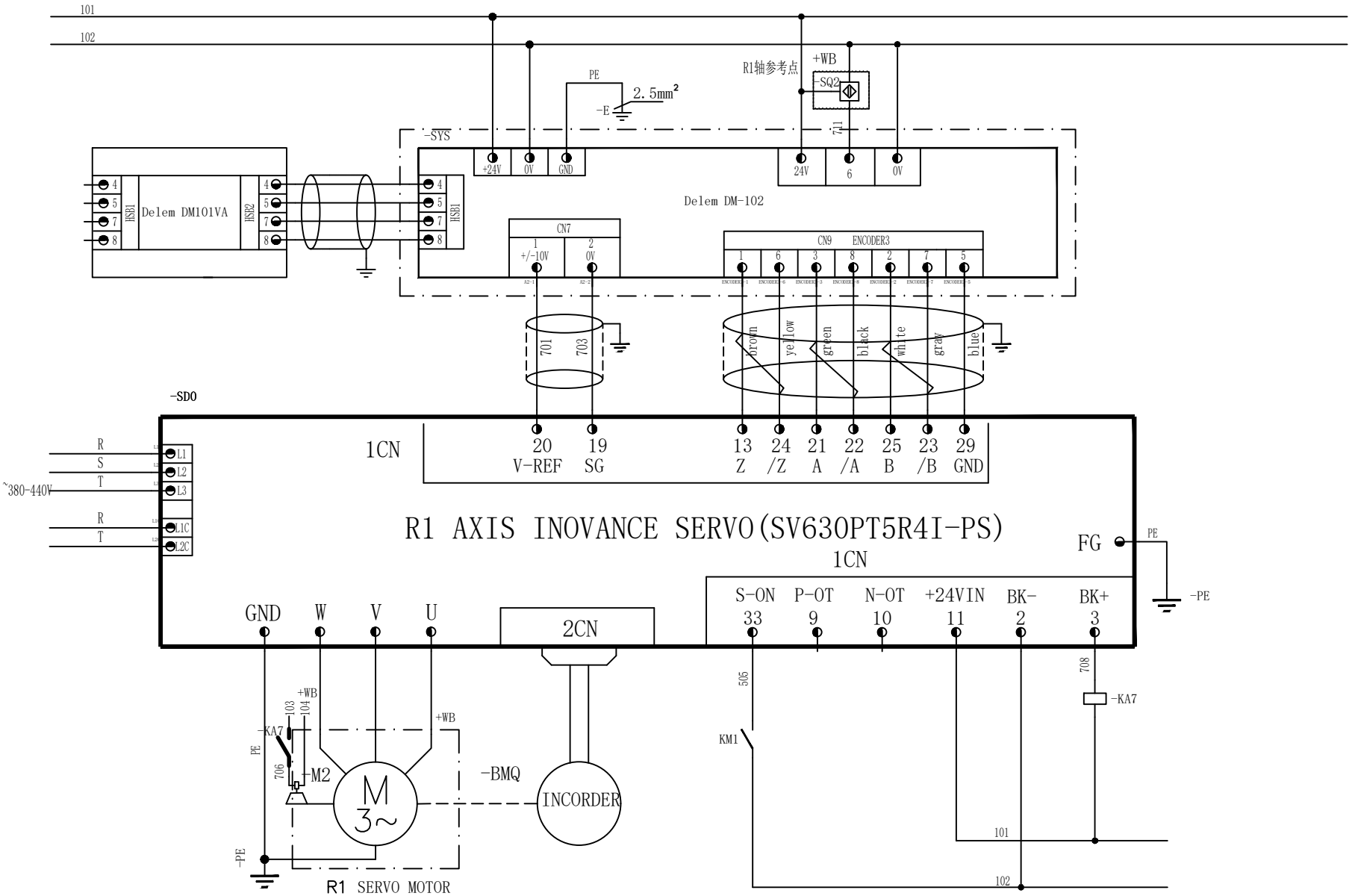
P-Y1Y2X1X2R1R2Z1Z2C-DA66T	NJSL-003	12
	+A	4

X1 Axis Servo control



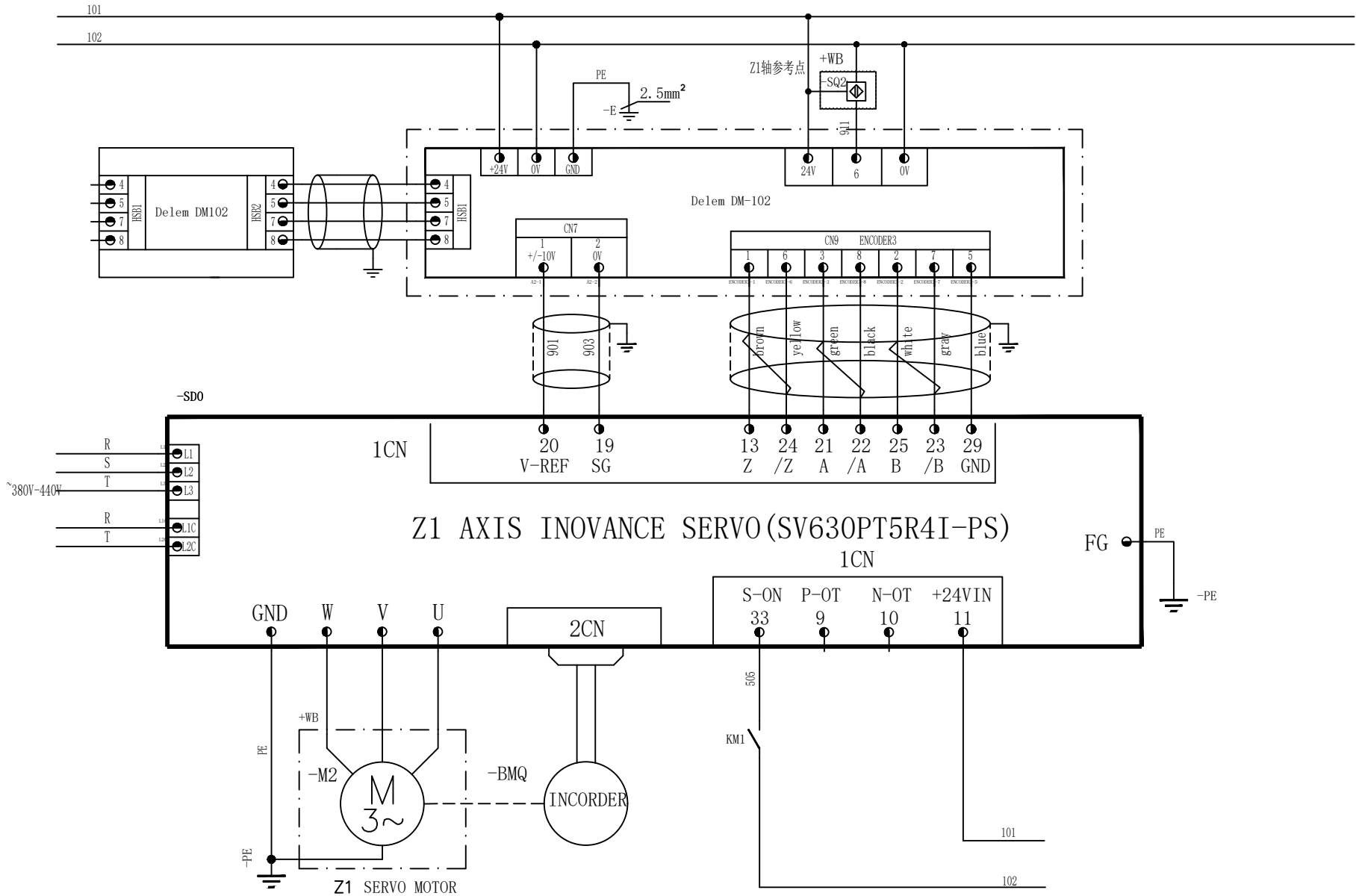
P-Y1Y2X1X2R1R2Z1Z2C-DA66T	NJSL-003	12
	+A	5

R1 Axis Servo control



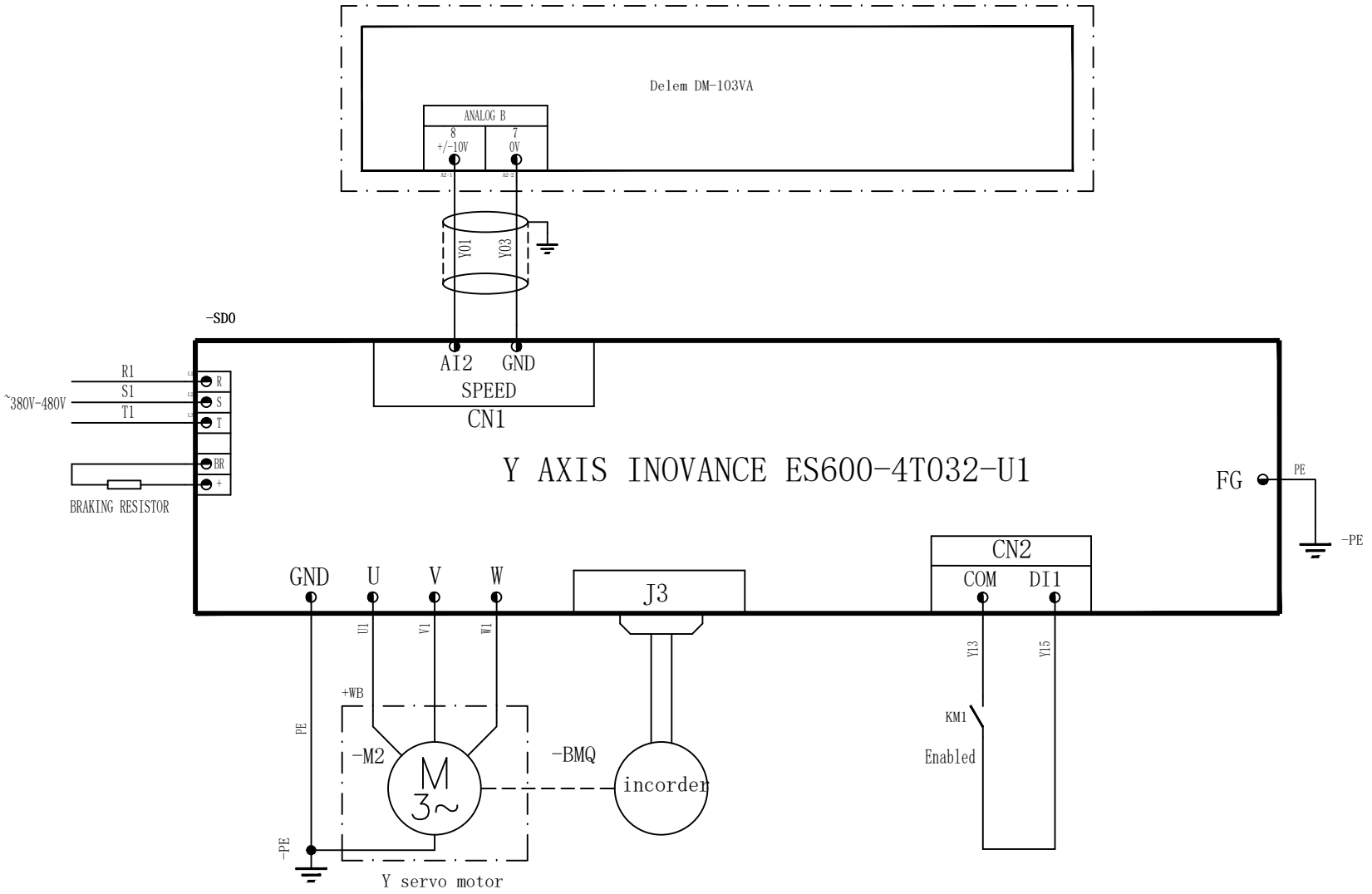
| | | |

Z1 Axis Servo control



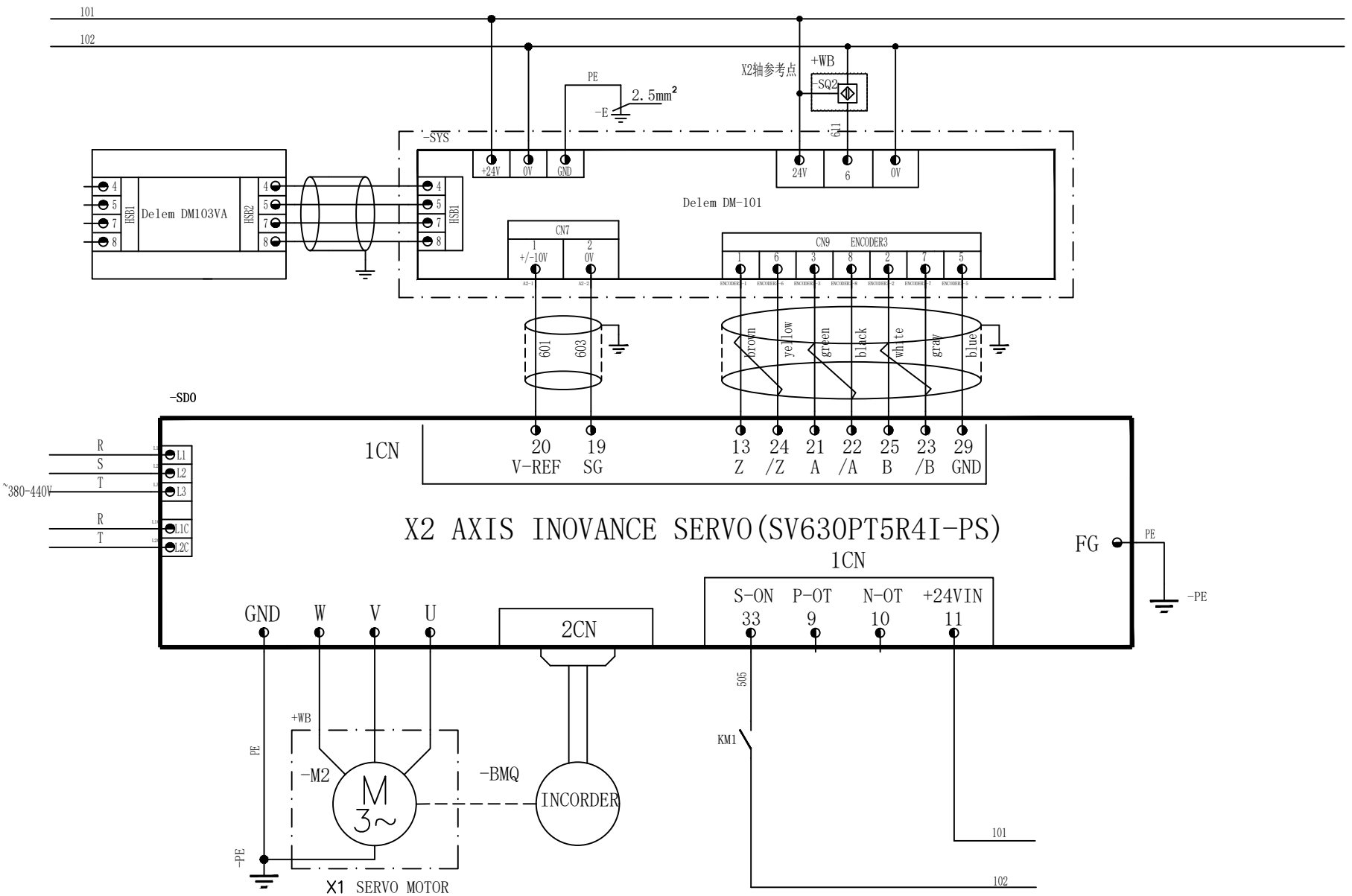
| | | |

Y Axis Pump Servo control



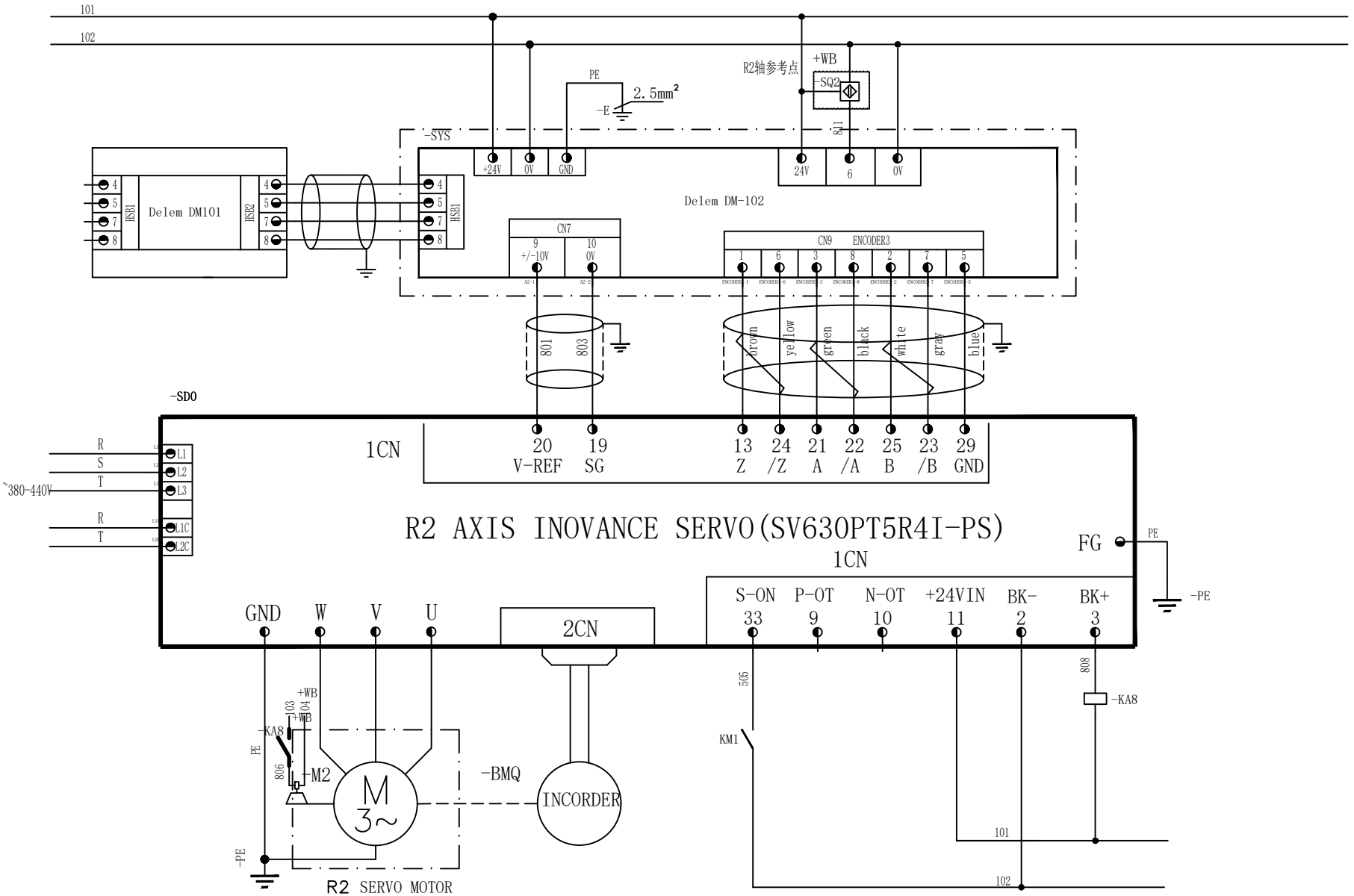
P-Y1Y2X1X2R1R2Z1Z2C-DA66T	NJSL-003	12
	+A	11

X2 Axis Servo control



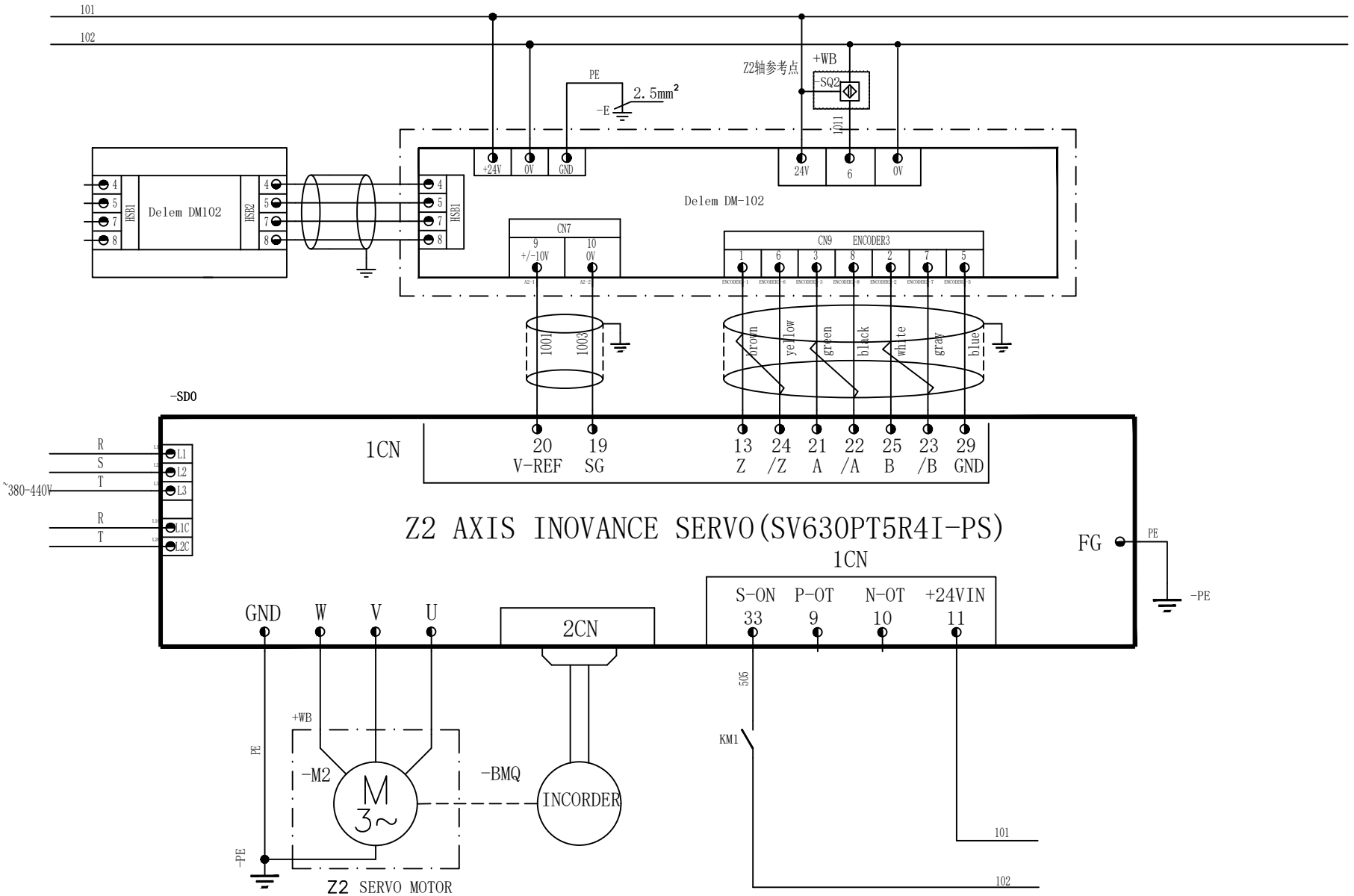
P-Y1Y2X1X2R1R2Z1Z2C-DA66T	NJSL-003	12
	+A	6

R2 Axis Servo control



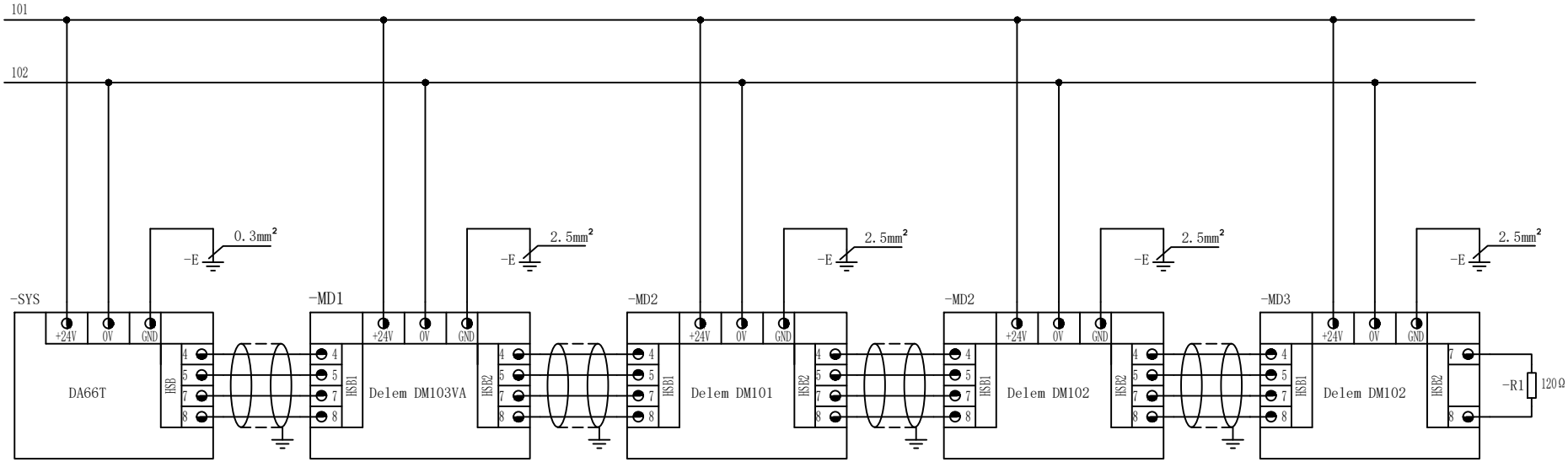
| | | |

Z2 Axis Servo control



P-Y1Y2X1X2R1R2Z1Z2C-DA66T		NJSL-003	12
			10

CNC Controller	Y1/Y2/X Moduler	Pressure valve	Pressure valve	Crowning feedback



| | | |