Urschel ETRS E-Model Slicer

Year of manufacture: 2019

The machine is CE-marked and complies with the applicable European Union regulations and directives.

Very low operating time – approximately 340 hours.

Urschel E-Model ETRS Slicing Machine

Capacity: 2 t/h
Rated power: 2.95 kW
Width: 897 mm
Height: 1,569 mm
Length: 2,560 mm
Weight: 560 kg

Cutting wheel diameter: 508 mm
Cutting wheel motor power: 2.2 kW
Feed conveyor motor power: 0.75 kW

Additional information:

Depending on the cutting wheel fitted, the machine can produce slices in various shapes.
Slicing thickness: 0.8–76.2 mm
Ultra-thin slicing: 0.5–6 mm with a MicroSlice cutting wheel
Crinkle cutting
Julienne cutting: approximately 12.7 × 12.7 mm to 50.8 × 50.8 mm

Stainless steel construction

Function:

The machine cuts the product into slices of various shapes.

Operating principle:

The product to be processed is placed on the feed conveyor, which transfers it to the cutting unit. The high-speed rotating, interchangeable cutting wheel slices the product to the selected cutting thickness.

The machine can be integrated into industrial processing lines.



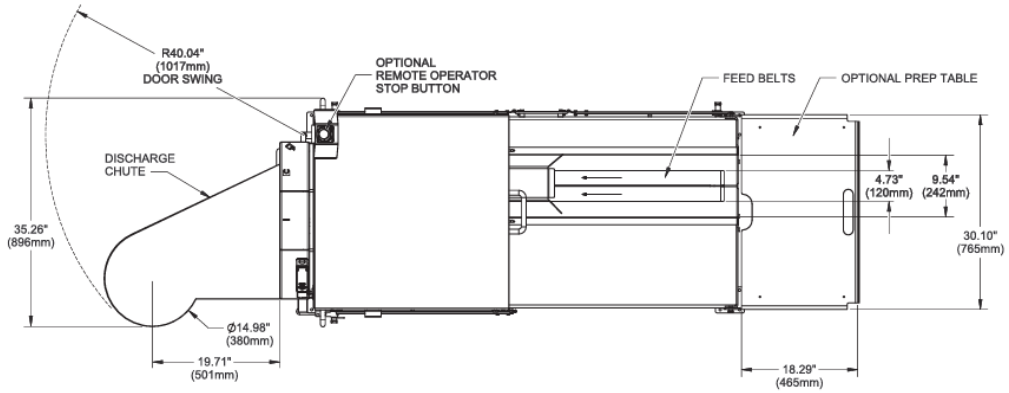
R40.04"
(1017mm)
DOOR SWING
OPTIONAL
REMOTE OPERATOR
STOP BUTTON
FEED BELTS
OPTIONAL PREP TABLE
DISCHARGE
CHUTE
4.73"
(120mm)
9.54"
(242mm)
35.26"
(896mm)
30.10"
(765mm)
Ø14.98"
(380mm)
19.71"
(501mm)
18.29"
(465mm)

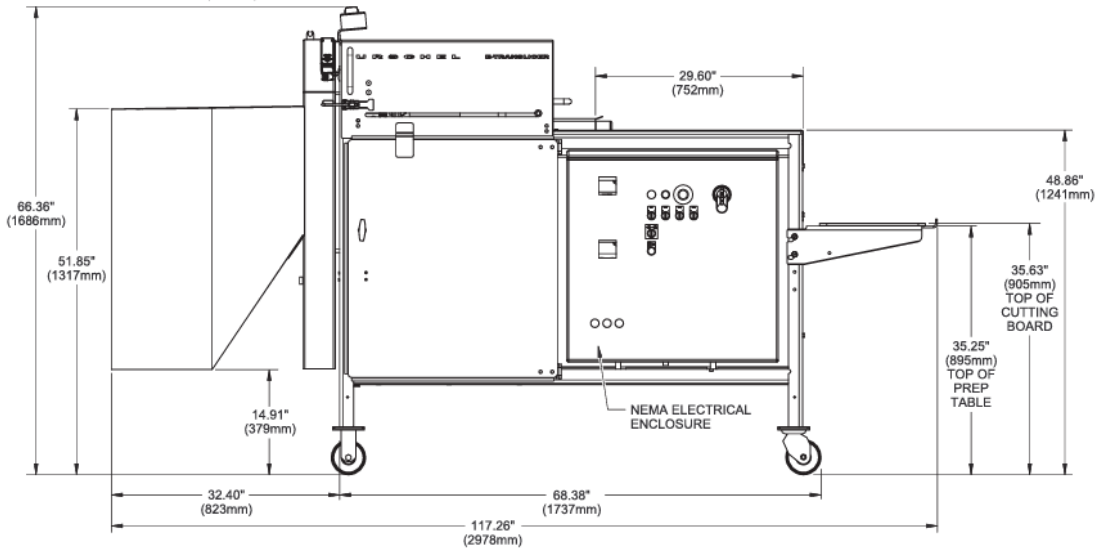
29.60"
(752mm)
66.36"
(1686mm)
48.86"
(1241mm)
51.85"
(1317mm)
35.63"
(905mm)
TOP OF
CUTTING
BOARD
35.25"
(895mm)
TOP OF
PREP
TABLE
14.91"
(379mm)
NEMA ELECTRICAL
ENCLOSURE
32.40"
(823mm)
68.38"
(1737mm)
117.26"
(2978mm)

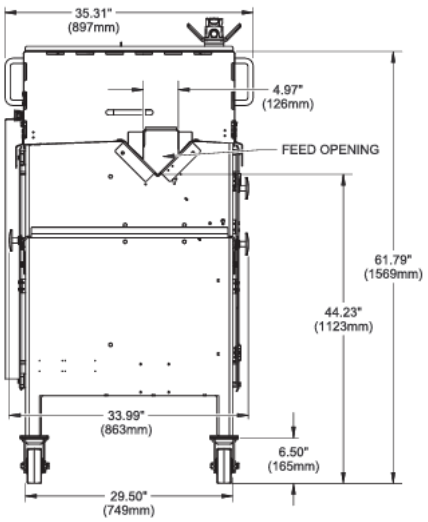
35.31"
(897mm)
4.97"
(126mm)
FEED OPENING
61.79"
(1569mm)
44.23"
(1123mm)
33.99"
(863mm)
6.50"
(165mm)
29.50"
(749mm)


E-TRANSLICER
ATTENTION
CAUTION
DANGER


KEY
Technology


URSCHEL
E-TRANSLICER
E-TRANSLICER
DANGER




TRANSLICER


KEY
Technology



