EMCO

EMCOMILL E350

3 axes CNC milling machines for the machining of small to medium lot sizes



MACHINING OF SMALL TO MEDIUM LOT SIZES

With a travel in X of 350 mm, the EMCOMILL E350 offers a perfect entry into demanding CNC milling for small to medium lot sizes at a very attractive price-performance ratio. It includes a fixed 20-station tool magazine, a tool changer with dual-gripper and a direct driven mechanical main spindle with 10000 rpm.

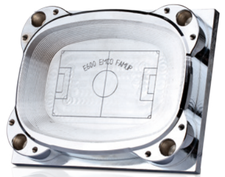

Demo part
(Steel)

1 TOOL MAGAZINE

/ 20-station tool magazine
/ Tool changer with dual-gripper arm

2 SPINDLE

/ Mechanical spindle direct drive: 10000 rpm
/ Speed of the main drive steplessly programmable
/ Powerful main motor
/ Main spindle bearings greased for life time

3 MACHINE STAND

/ Stable construction

4 CONTROL UNIT

/ State-of-the-art control technology from Siemens
/ Compact control design
/ Simple data transfer, either via ethernet or USB connection
/ Simple programming with ShopMill user interface or in ISO format

5 MACHINE CONSTRUCTION

/ Stable, gray cast-iron construction
/ Roller guides in X/Y/Z with automatic central oil lubrication



Performance and Torque

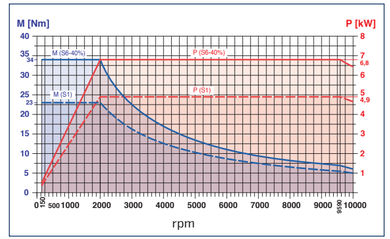

Performance and torque diagram main spindle (Siemens)



Cylinder Head
(Steel)

EMCOMILL E350

TECHNICAL HIGHLIGHTS



TOOL CHANGE

Quick coupler with dual-gripper arm and 'random' tool location coding; mechanical spindle with high performance drive.

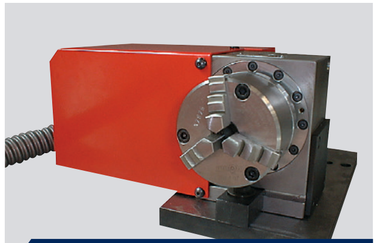

ROTARY TABLE

An optional 80 or 100 mm-diameter rotary table can be fitted as a 4th axis. The rotary table is CNC-controlled and can be interpolated with any linear axis (X, Y, Z).

HIGHLIGHTS

- / Extreme thermostability
- / Best machining precision
- / Mechanical spindle
- / State-of-the-art control technology from Siemens
- / JobShop programming software
- / Fairly priced
- / Minimal footprint
- / Made in the Heart of Europe

OPTIONS

- / 4th axis
- / Electronic handwheel
- / Automatic tool and workpiece measurement
- / Automatic door
- / Triple indicator lamp



CONTROL UNIT

The control is built into the machine casing to keep the machine's outer dimensions as small as possible.



DRUM-TYPE MAGAZINE

Drum-type magazine with 20 tool positions.

INSTALLATION PLAN

EMCOMILL E350

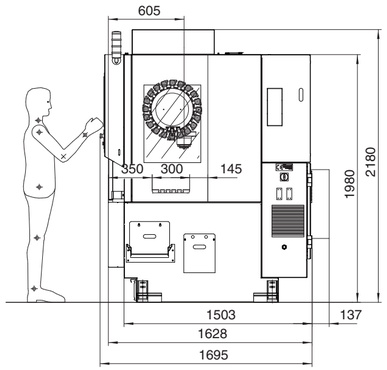

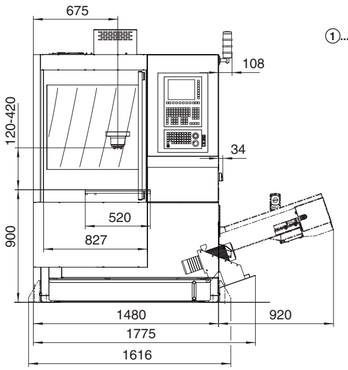

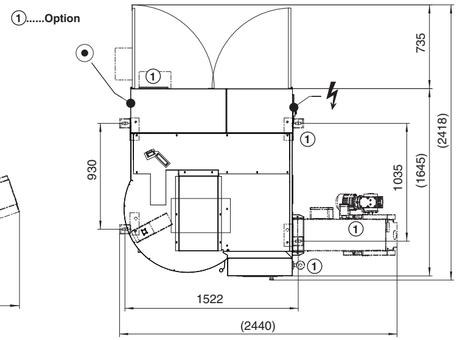

Details in millimeters

TECHNICAL DATA

EMCOMILL E350

Work area

Travel in X	350 mm
Travel in Y	250 mm
Travel in Z	300 mm
Min. clearance spindle nose – table	120 mm
Max. clearance spindle nose – table	420 mm

Tisch

Clamping Area	520 x 300 mm
T-groove: number, size, clearance	5 x 12 x 45 mm
Max. table load	100 kg
Table - floor distance	880 mm

Spindle

Speed range	50 – 10000 rpm
Spindle motor power	6,8 kW (S6)
Spindle torque	34 Nm (S6)
Tool taper (DIN 69871)	ISO 30
Drive	Direct drive

Tool change

Number of tool stations	20
Tool selection	Random tool location coding
Max. tool diameter (without adjacent tools)	63 mm (80 mm)
Max. tool length	200 mm
Max. tool weight	5 kg
Time for tool change (tool / tool)	2,5 s

General Data

Power supply	9 kVA
Dimensions W x P x H	1600 x 1700 x 1980 mm
Weight	1970 kg
Required compressed air	6 bar

beyond standard

EMCO GmbH / Salzburger Str. 80 / 5400 Hallein-Taxach / Austria / T +43 6245 891-0 / F +43 6245 86965 / info@emco.at

www.emco-world.com

EN7185 · 12/20 · Technical modifications reserved. Errors and omissions excepted.