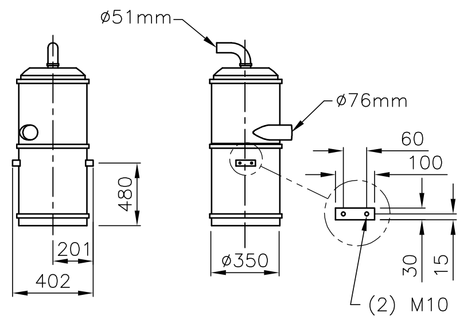

VOLKMANN CONVEYOR MOUNT DETAIL

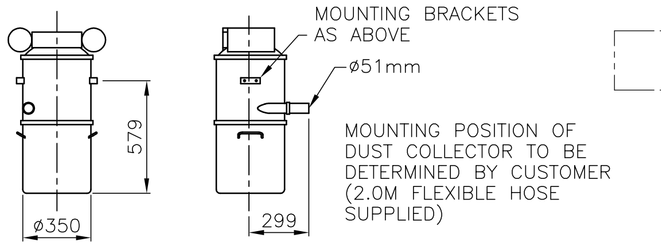

VOLKMANN DUST COLLECTOR MOUNT DETAIL

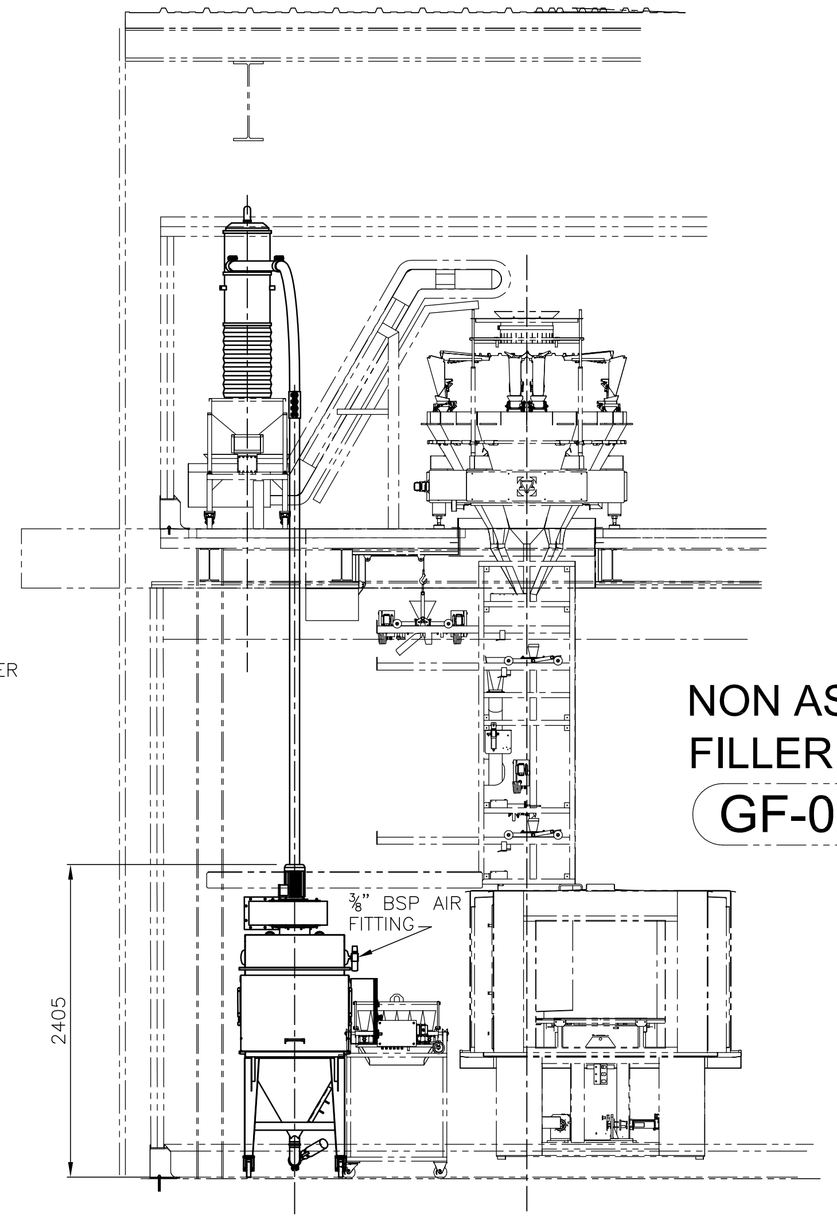

NON ASEPTIC FILLER ROOM

GF-02

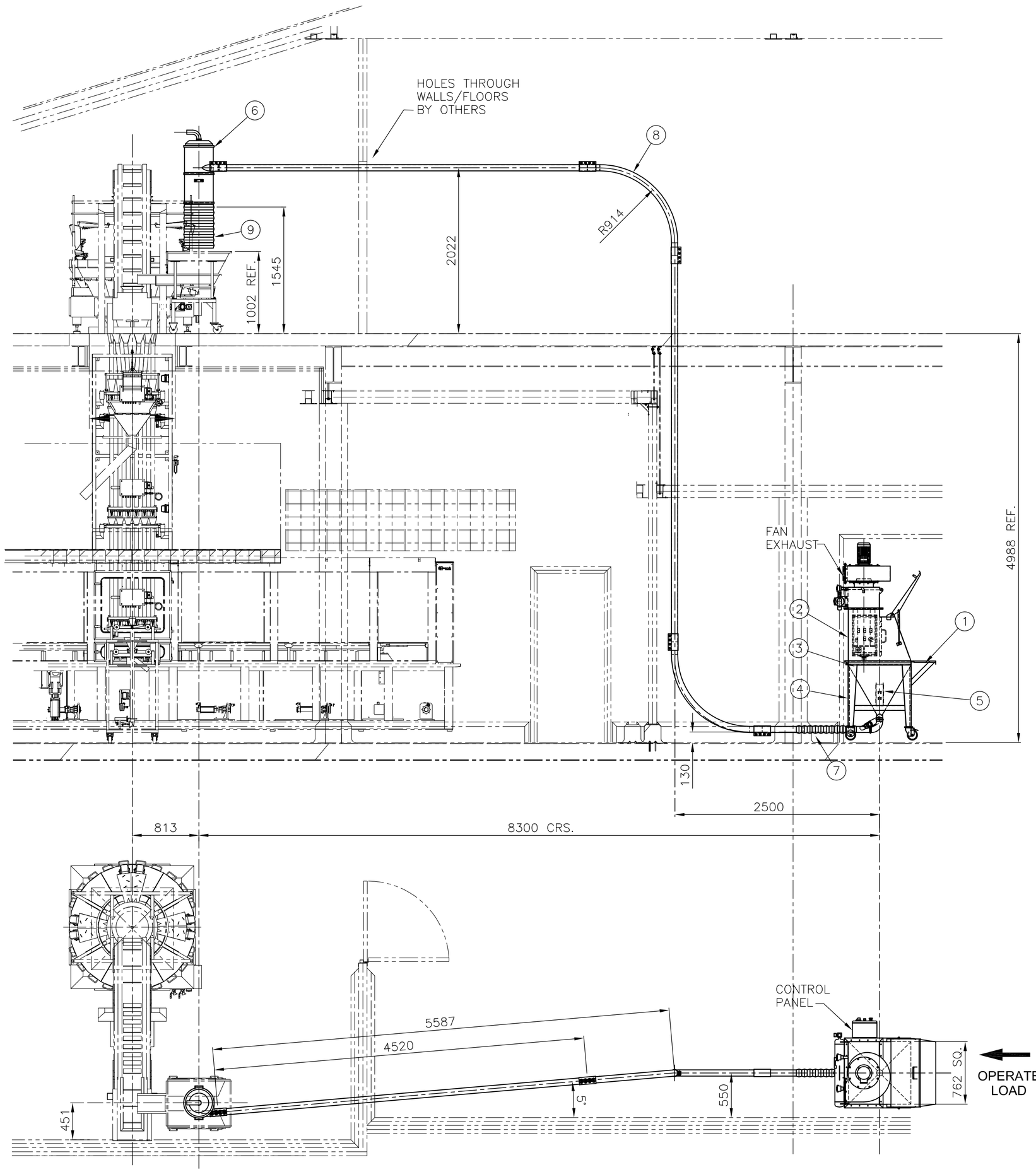

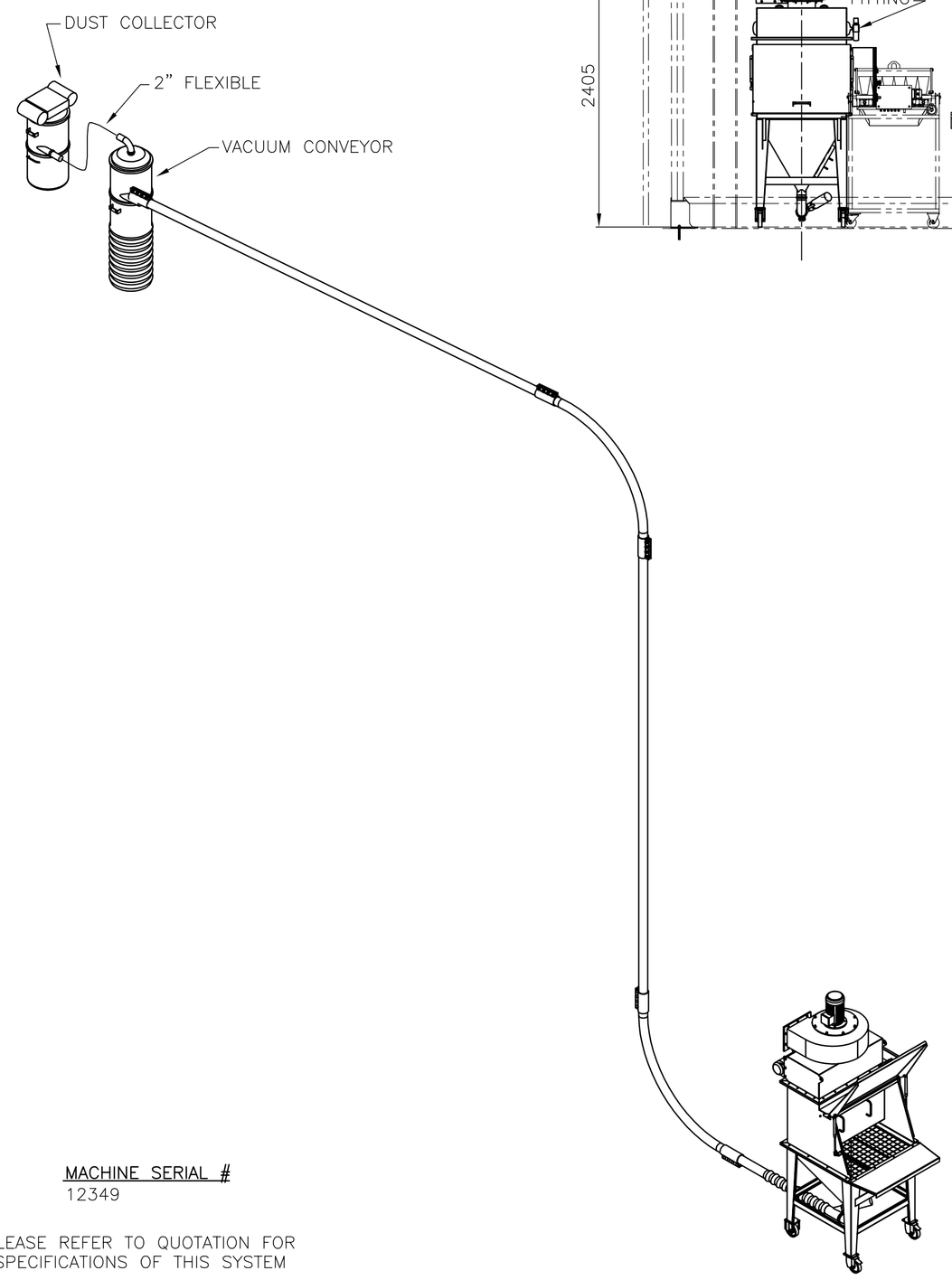

MACHINE SERIAL #
12349

PLEASE REFER TO QUOTATION FOR SPECIFICATIONS OF THIS SYSTEM

CONVEYING LINE INSTALL
- LAYOUT AND DESIGN OF FLEXICON PNEUMATI-CON CONVEYING LINE IS A "SUGGESTED" ROUTE.
- ACTUAL LAYOUT AND INSTALLATION MAY DIFFER FROM THAT PROPOSED.
- GOVERNING FACTOR OF PNEUMATI-CON CONVEYING LINE IS THE NUMBER OF BENDS. AND OVERALL CONVEYING LINE LENGTH
- FLEXICON WILL PROVIDE 4 BENDS, 3 x 6m STRAIGHT TUBE AND 12 CLAMPS
- CUSTOMER TO PROVIDE SUITABLE BRACKETS FOR INSTALLATION
-

REV	PLC'S	BY	DATE	DESCRIPTION
A	ALL	JP	11.12.12	MOVE HOPPER
B	ALL	JP	08.1.13	REVISE VOLKMANN UNIT TO SUPPLIED

INFORMATION SET FORTH IN THIS DRAWING IS PROPRIETARY WITH FLEXICON CORPORATION. THIS DRAWING SHALL NOT BE REPRODUCED, COPIED, LOANED OR SUBMITTED TO OUTSIDE PARTIES FOR EXAMINATION WITHOUT THE CONSENT OF FLEXICON CORPORATION, EXCEPT FOR THE PURPOSE FOR WHICH IT WAS SUPPLIED.

flexicon®
Flexicon (Europe) Ltd
www.flexicon.co.uk
89 Lower Herne Road
Herne, Herne Bay
Kent CT6 7PH
United Kingdom
Tel: +44 (0) 1227 374710
Fax: +44 (0) 1227 365821

DRN. BY: J. POPE. | REV. BY: | JOB No. 12349 | QUOTE No. 2012E0100-DPW113

DATE: 23.11.12 | SCALE: A1 1:33 | TITLE: CONVEYING SYSTEM LAYOUT

CUSTOMER: PREMIER FOODS | DWG No. C25783 | REV B | SHEET 1 OF 1