DOOSAN

LEO 1600

6 inch Compact Turning Center

MACHINE GREATNESS™

Basic structure

LEO 1600 includes a 30˚slanted stable bed structure with highly rigid roller type LM guideway for reliable machining.

A small footprint with big capabilities

The machine is a compact design with 1850 mm width and comes with a 175 mm X-axis stroke and 330 mm Z-axis stroke.

Travel

X-axis **175 mm** (6.9 inch)

Z-axis **330 mm** (13.0 inch)

Rapid feederate

X / Z-axis **30 m/min** (1181.1 ipm)

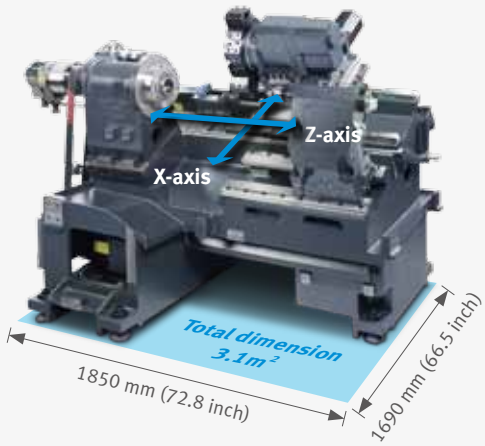

Machining Area

LEO 1600 offers the largest machining area in its class.

Bar working diameter

45 mm (1.8 inch)

Max. Allowable workpiece weight (including chuck)

Chuck work **70 kg** (154.3 lb)

Shaft work **150 kg** (330.7 lb)

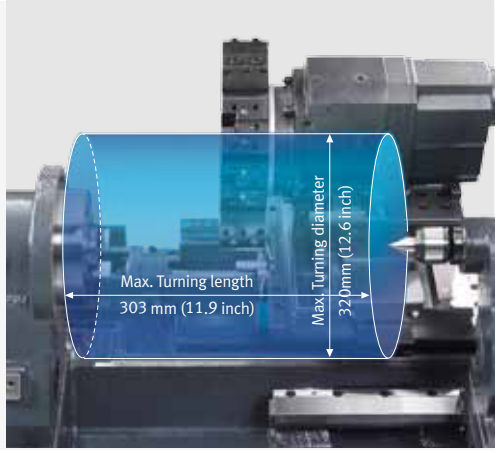

High reliable spindle

Highly reliable spindle with high-rigidity spindle bearing design is available with chuck size 6 inch standard, 8 inch option.

Chuck size

170 mm (6 inch)

210 mm (8 inch) option

NC : DOOSAN FANUC i series

Max. Spindle speed : 4000 r/min

Max. Spindle power : 7.5/5.5 kW (10.1/7.4 HP)

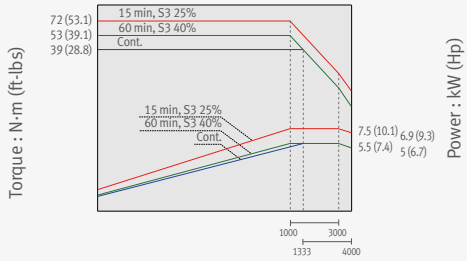

Turret

The durable eight station turret ensures stable tool rotation and increase machine performance.

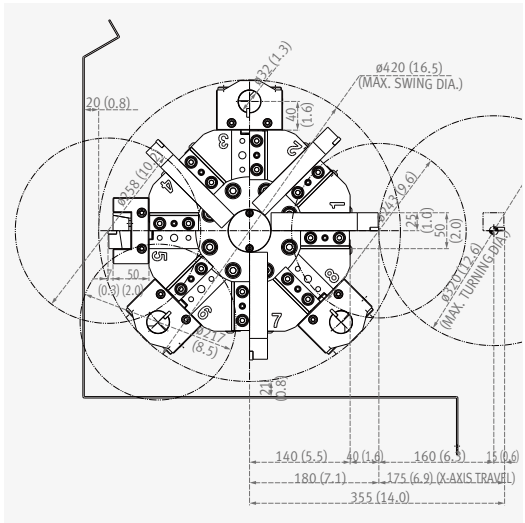

Tailstock option

Rigid tailstock is available to provide stable support of long workpieces.

Quill diameter

65 mm (2.6 inch)

Tailstock / Quill travel

320 / 80 mm (12.6 / 3.1 inch)

Live tail center

MT#4

Ease of Operation

User friendly Design for ease of operation

- Easy monitoring with reclined front window.
- Rear side chip disposal
- Routine maintenance details are placed in front

For reducing operator workload, designed wide door opening

Standard / Optional Specifications

Various optional features are available for customer-specific work environments.

● Standard ○ Optional X Not applicable

No.	Description	Features	LEO 1600
1	Chuck	170 mm (6 inch)	●
2		210 mm (8 inch)	○
3	Jaw	Soft Jaws	●
4		Hardened & Ground Jaws	○
5	Tailstock	Manual_Live	○
6		Live center_MT4	○
7	Chucking	Chuck clamp confirmation	○
8	Turret	8 stations	●
9		12 stations	○
10	Coolant pump	1.3 bar	●
11		1.5 bar	○
12		4.5 bar	○
13	Coolant option	Oil skimmer (Belt type)	○
14		Rear side	●
15		Right side	○
17	Rear chip conveyor	Hinged belt	○
18		Magnetic scrapper	○
19		Screw (auger)	○
20	Side chip conveyor	Hinged belt	○
21		Magnetic scrapper	○
22		Screw (auger)	○
23	Chip bucket	Folklift 110L (for auger conveyor)	○
24		Folklift 200L (for auger conveyor)	○
25		Folklift 220L	○
26		Folklift 300L	○
27		Folklift 380L	○
28		Rotation 220L	○
29		Rotation 300L	○
30		Rotation 380L	○

No.	Description	Features	LEO 1600
31	Optional device	Top cover	○
32		Parts catcher	○
33		Bar feeder interface	○
34		Air conditioner	○
35		Work & Tool counter	○
36		Signal tower	○
37	Customized Special Option	PARTS CATCHER_BOX TYPE_ MAIN/LEFT SPINDLE	○
38		TOOL SETTER_MANUAL	○
39		TOOL SETTER_AUTOMATIC_ ELECTRIC	○
40		U-DRILL HOLDER CAP	○
41		AUTOMATIC FRONT DOOR WITH SAFETY EDGE	○
42		NUMBER OF TOOL ST. FOR MAIN_12ST	○
43		COOLANT PRESSURE SWITCH	○
44		COOLANT CHILLER	○
45		AUTO WORK MEASUREMENT_ OLP40_RENISHAW	○
46		CHIP CONVEYOR TYPE_SCREW	○
47		AIR LIMIT SENSING ON CHUCK_PREPARATION	○
48		AIR CHUCK PREPARATION	○
49		MIST COLLECTOR_0.4KW	○
50		MIST COLLECTOR_0.75KW	○
51		TSC FOR MAIN/LEFT SPINDLE_ PREPARATION	○
52		TSA FOR MAIN/LEFT SPINDLE_ PREPARATION	○
53		Coolant level switch : Sensing level - Low	○

* Please contact DOOSAN to select detail specifications.

Quick change CAPTO option

The Quick Change Tool system simplifies tool change operation. Recommended for users who need to change tools frequently or reduce the set-up time.

External Dimensions

LEO 1600

Unit: mm (inch)

Top View

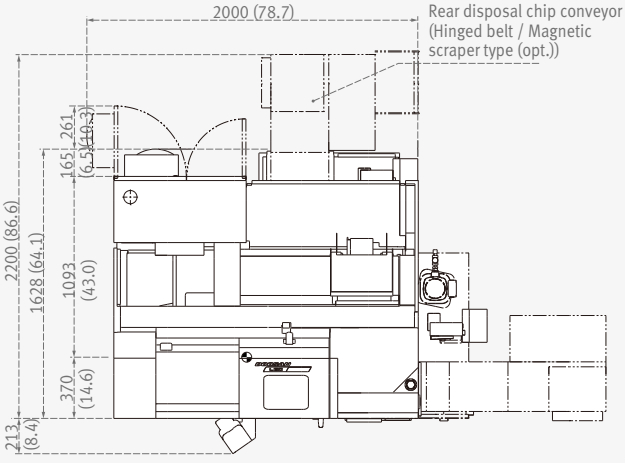

Front View

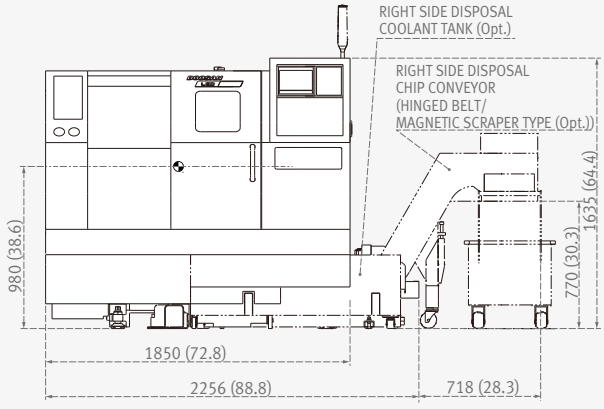

* Some peripheral equipment can be placed in other places

Tooling System / Working Range

Tooling System (8 stations)

Unit: mm (inch)

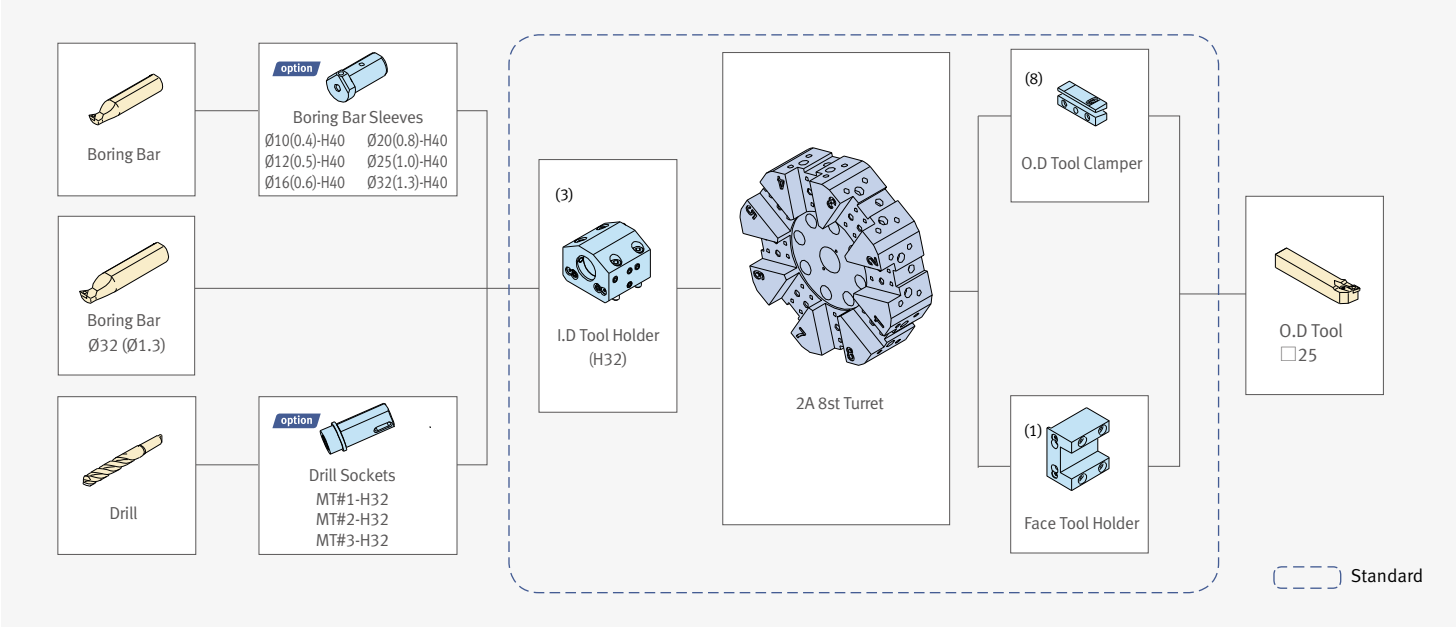

Working Range

Unit: mm (inch)

OD Holder

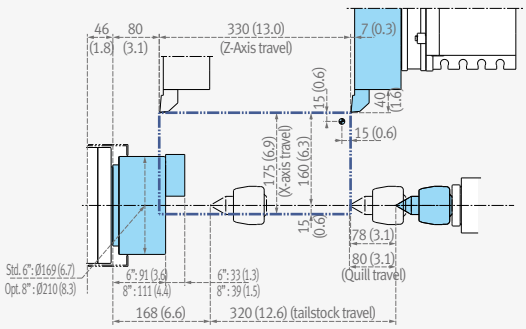

ID Holder

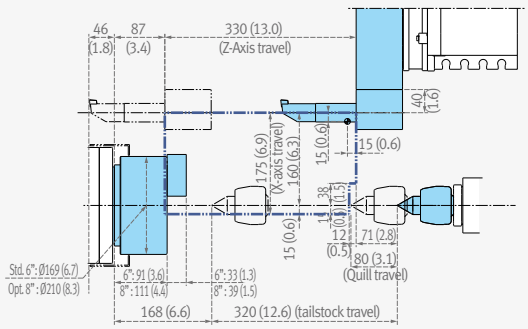

Face tool Holder

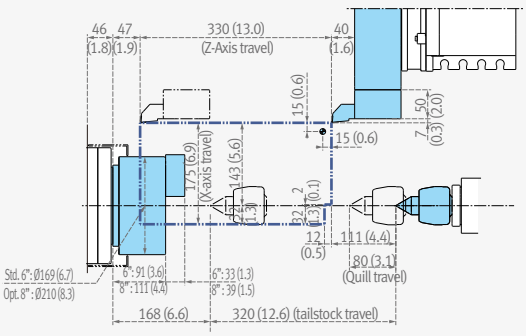

Machine Specifications

Item			Unit	LEO 1600
Capacity	Swing over bed		mm (inch)	470 (18.5)
	Swing over saddle		mm (inch)	300 (11.8)
	Recom. Turning diameter		mm (inch)	170 (6.7)
	Max. Turning diameter		mm (inch)	320 (12.6)
	Max. Turning length		mm (inch)	303 (11.9)
	Chuck size		inch	6 {8}*
	Bar working diameter		mm (inch)	45 (1.8)
Travel	Travel distance	X axis	mm (inch)	175 (6.9)
		Z axis	mm (inch)	330 (13.0)
	Rapid traverse rate	X axis	m/min (ipm)	30 (1181.1)
		Z axis	m/min (ipm)	30 (1181.1)
Spindle	Max. Spindle speed		r/min	4000
	Main spindle motor power (S3 25%/cont.)		kW (Hp)	7.5/5.5 (10.1/7.4)
	Spindle nose		ASA	A2-5
	Spindle bearing diameter (Front)		mm (inch)	90 (3.5)
	Spindle through hole diameter		mm (inch)	61 (2.4)
Turret	No. of tool stations		ea	8 {12}*
	OD tool size		mm (inch)	25 x 25 (1.0 x 1.0)
	Max. boring bar size		mm (inch)	ø32 (ø1.3)
	Turret Indexing time (1 station swivel)		sec	0.15
Tail Stock	Quill diameter		mm (inch)	65 (2.6)
	Quill bore taper		MT	#4
	Quill travel		mm (inch)	80 (3.1)
Motors	Coolant pump motor power		kW (Hp)	0.18 {0.4/1.1}* (0.2 {0.5/1.5})
Power source	Electric power supply (rated capacity)		kVA	14.97
Machine Dimensions	Height		mm (inch)	1635 (64.4)
	Length		mm (inch)	1850 (72.8)
	Width		mm (inch)	1690 (66.5)
	Weight		kg (lb)	2600 (5731.9)
Control	CNC system		-	DOOSAN Fanuc i Plus

* { } : Option

CNC Specifications

FANUC

● Standard ○ Optional X Not applicable

No.	Division	Item	Spec.	DOOSAN Fanuc i Plus 2-Axis
1	Controlled axis	Control paths		1 Path
2		Simultaneously controlled axes		2 axes
3		Cs contouring control		X
4		Torque control		●
5		HRV2 control		●
6		Inch/metric conversion		●
7		Stored stroke check 1		●
8		Stored stroke check 2,3		●
9		Stored limit check before move		○
10		Chamfering on/off		●
11		Unexpected disturbance torque detection function		●
12		Position switch		●
13	Operation	DNC operation	Included in RS232C interface.	●
14		DNC operation with memory card		●
15		Quick program restart		X
16		Tool retract and recover		○
17		Manual intervention and return		○
18		Wrong operation prevention		●
19		Dry run		●
20		Single block		●
21		Reference position shift		●
22		Handle interruption		○
23		Incremental feed	x1,x10,x100	●
24		Manual handle retrace		○
25		Active block cancel		X
26	Interpolation functions	Nano interpolation		●
27		Linear interpolation		●
28		Circular interpolation		●
29		Polar coordinate interpolation		X
30		Cylindrical interpolation		X
31		Helical interpolation		X
32		Thread cutting, synchronous cutting		●
33		Multi threading		●
34		Thread cutting retract		●
35		Continuous threading		●
36		Variable lead thread cutting		●
37		Skip	G31	●
38		High-speed skip	Input signal is 8 points.	○
39		2nd reference position return	G30	●
40		3rd/4th reference position return		●
41	Feed function	Override cancel		●
42		Manual per revolution feed		●
43		AI contour control I		○
44		AI contour control II		X
45		Bell-type acceleration/deceleration before look ahead interpolation	Included in AI contour control I or II	○
46		Rapid traverse block overlap		●
47	Program input	Optional block skip	9 pieces	○
48		Absolute/incremental programming	Combined use in the same block	●
49		Diameter/Radius programming		●
50		Automatic coordinate system setting		●
51		Workpiece coordinate system	G52 - G59	●
52		Workpiece coordinate system preset		●
53		Direct drawing dimension programming		●
54		G code system	A/B/C	●
55		Chamfering/Corner R		●
56		Custom macro		●
57		Addition of custom macro common variables	#100 - #199, #500 - #999	●

No.	Division	Item	Spec.	DOOSAN Fanuc i Plus 2-Axis
58	Program input	Interruption type custom macro		○
59		Canned cycle		●
60		Multiple repetitive cycles	G70~G76	●
61		Multiple repetitive cycles II	Pocket profile	●
62		Canned cycle for drilling		●
63		Coordinate system shift		●
64		Direct input of coordinate system shift		●
65		Pattern data input		○
66	Operation Guidance Function	EZ Guidei(Conversational Programming Solution)		X
67		MANUAL GUIDE 0i		○
		iHMI with Machining Cycle		X
68		EZ Operation package		X
69	Auxiliary/Spindle speed function	Constant surface speed control		●
70		Spindle override	0 - 150%	●
71		Spindle orientation		●
72		Rigid tap		●
73		Arbitrary speed threading		○
74	Tool function/Tool compensation	Tool function		T2 +2 digits
75		Tool offset pairs	128-pairs	●
76		Tool offset pairs	200-pairs	○
77		Tool offset		●
78		Tool radius/Tool nose radius compensation		●
79		Tool geometry/wear compensation		●
80		Automatic tool offset	G36/G37	○
81		Direct input of offset value measured B		○
82		Tool life management		●
83	Accuracy compensation function	Backlash compensation for each rapid traverse and cutting feed		●
84		Stored pitch error compensation		○
85	Editing operation	Part program storage size & Number of registerable programs	5120M(2MB) _ 1000 programs	●
86		Part program storage size & Number of registerable programs	1280M (512KB) _ 400 programs	X
87		Part program storage size & Number of registerable programs	5120M(2MB) _ 400 programs	X
88		Program protect		●
89		Password function		●
90		Playback		●
91	Setting and display	Status display		●
92		Main menu screen		X
93	Data input/output	Reader/puncher interface	Reader/puncher (Ch.1) interface	●
94		Fast data server		X
95		External data input		●
96		Memory card input/output		●
97		USB memory input/output		●
98		Automatic data backup		●
99	Interface function	Embedded Ethernet		●
100		Fast Ethernet		X
101	Others	Display unit	10.4" color LCD	●
102		PMC ladder function	8000 steps	●
103		Robot interface with PMC I/O module		○
104		Robot interface with PROFIBUS-DP		X

Major Specifications

LEO 1600

Description	Unit	LEO 1600
Max. Turning diameter	mm (inch)	320 (12.6)
Max. Turning length	mm (inch)	303 (11.9)
Chuck size	inch	170 (6") {8"}*
Max. Spindle speed	r/min	4000

*{ } : Option

Doosan Machine Tools

www.doosanmachinetools.com

Head Office
22F T Tower, 30, Sowol-ro 2-gil, Jung-gu, Seoul, Korea, 04637
Tel +82-2-6972-0370 / 0350
Fax +82-2-6972-0400

Doosan Machine Tools America
19A Chapin Rd., Pine Brook, NJ 07058, U.S.A.
Tel +1-973-618-2500
Fax +1-973-618-2501

Doosan Machine Tools Europe
Emdener Strasse 24, D-41540 Dormagen, Germany
Tel +49-2133-5067-100
Fax +49-2133-5067-111

Doosan Machine Tools India
No.82, Jakkuar Village, Yelahanka Hobil, Bangalore-560064
Tel + 91-80-2205-6900
E-mail india@doosanmt.com

Doosan Machine Tools China
Room 101,201,301, Building 39 Xinzhuan Highway No.258 Songjiang District,China Shanghai(201612)
Tel +86 21-5445-1155
Fax +86 21-6405-1472

* For more details, please contact Doosan Machine Tools.
* The specifications and information above-mentioned may be changed without prior notice.
* Doosan Machine Tools Co., Ltd. is a subsidiary of MBK Partners. The trademark DOOSAN is used under a licensing agreement with Doosan Corporation, the registered trademark holder.

Fire Safety Precautions | There is a high risk or fire when using non-water-soluble cutting fluids, processing flammable materials, neglecting use coolants and modifying the machine without the consent of the manufacturer. Please check the SAFETY GUIDANCE carefully before using the machine.

ver. EN 191220 SU