NB1	Electrical Box
NB2	Customer Wiring Entry (both sides)
NB3	2 1/2" Victaulic Connection
NB4	76.1 mm Welded Connection

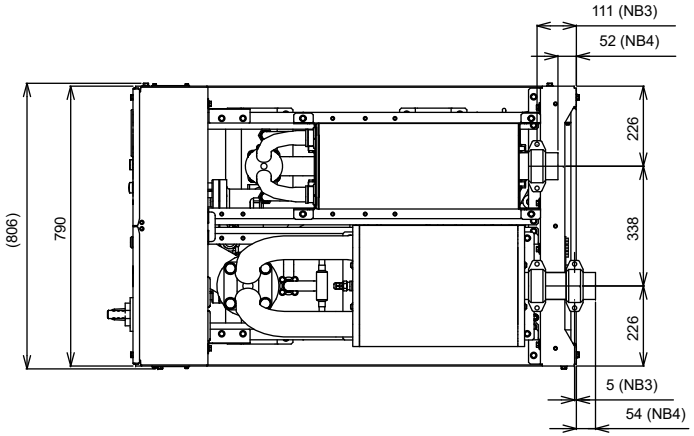

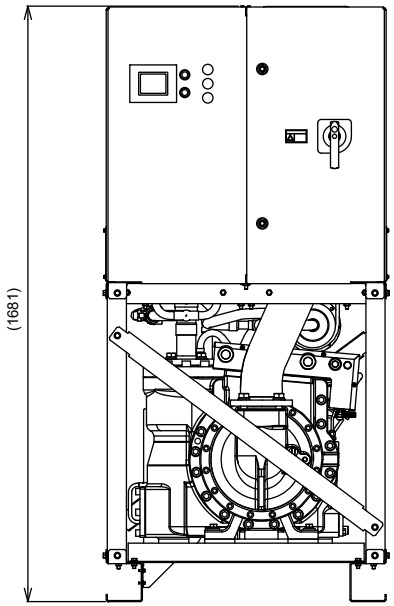

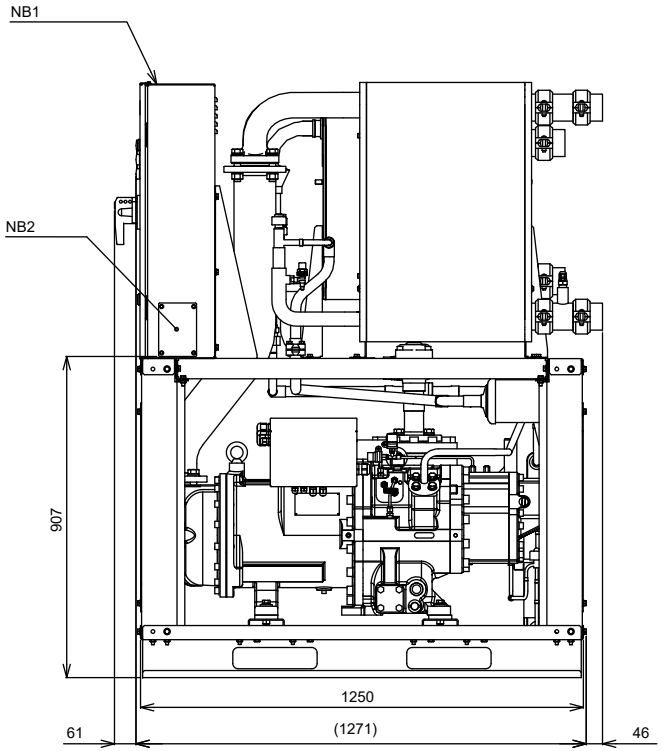

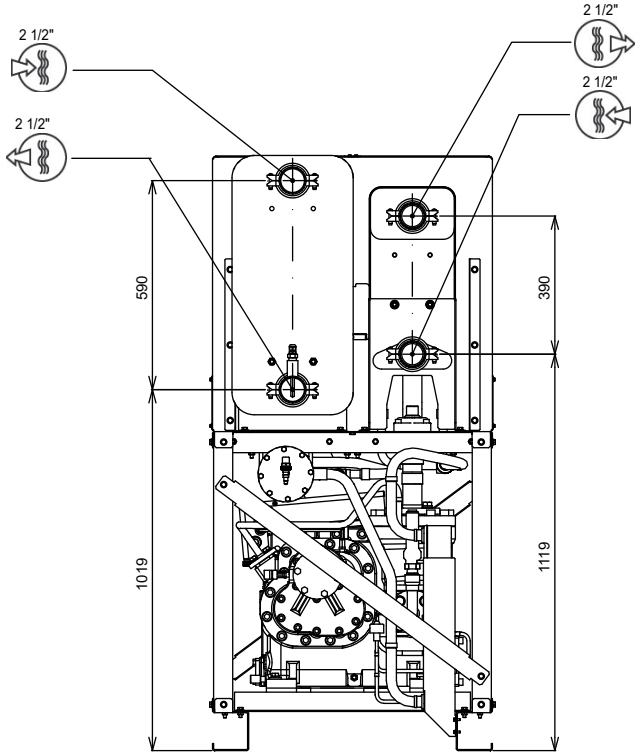

WEIGHT = 0 KILOGRAMS [0 POUNDS]

THIRD ANGLE

Johnson Controls

JOHNSON CONTROLS - BUILDING EFFICIENCY
507 EAST MICHIGAN STREET, MILWAUKEE, WI, 53202 USA

REV.	DATE	EC. NO.	DR.	CHK.	ENG.
-					
NEW					

REVISION

CONTINUED

"ALL PROPRIETARY RIGHTS IN THE SUBJECT MATTER HEREOF ARE RESERVED AND NO PERMISSION IS GRANTED TO REPRODUCE THIS PRINT IN WHOLE OR IN ANY PART, OR DISCLOSE ANY OF THE INFORMATION UPON IT TO OTHERS WITHOUT WRITTEN RELEASE BY JOHNSON CONTROLS INCORPORATED"

DO NOT SCALE

DRAWN DSM 22-OCT-2015
MODELER
CHKD
ENG
SCALE: 1 MASS (kg):

PRODUCT DRAWING
YCSE 0141, 0181, 0221, 0241

MATERIAL
ENG. STD.
PART NO.
CUT SIZE

A1

CAGE NUMBER

DRAWING NUMBER
035-26193-000

REVISION -
VERSION

ORIG. NO.: 035-26193-000 SHEET 1 OF 1 RELEASED